dacor
The Life of the Kitchen.®

Use and Care Manual

Discovery® Gas Cooktop

Models DYCT304G, DYCT365G

Table of Contents

Important Safety Instructions 1
Getting to Know Your Cooktop 4
Setting Up Your Cooktop 5
Operating Your Cooktop 6
Care and Cleaning 9
Before You Call for Service 14
Warranty and Service 15
Warranty Card ..... Back Cover

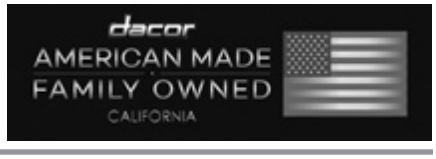

Part No. 108862 Rev. A

To Our Valued Customer:

Congratulations on your purchase of the very latest in Dacor® products! Our unique combination of features, style and performance make us The Life of the Kitchen™, and a great addition to your home.

In order to familiarize yourself with the controls, functions and full potential of your new Distinctive Appliance, read this use and care manual thoroughly, beginning with the ***Important Safety Instructions*** section.

All Dacor appliances are designed and manufactured with quality and pride, while working within the framework of our company value. Should you ever experience a problem with your product, please first check the ***Before You Call for Service*** section of this manual for guidance. It provides useful suggestions and remedies prior to calling for service.

Valuable customer input helps us to continuously improve our products and services, so please feel free to contact our Customer Service Team for assistance with any of your product support needs.

Dacor Customer Service Team
14425 Clark Avenue
City of Industry, CA 91745

Telephone: (800) 793-0093
Fax: (626) 403-3130
Hours of Operation: Monday through Friday
6:00 A.M. to 5:00 P.M. Pacific Time

Web Site: www.dacor.com

Thank you for choosing Dacor for your home. We are a company built by families for families and we are dedicated to serving yours. We are confident that your new Dacor product will deliver a high level of performance and enjoyment for many years to come.

Sincerely,

The Dacor Customer Service Team

© 2015 Dacor, all rights reserved

Important Safety Instructions

Installer: Leave these instructions with the appliance.

Consumer: Read this ***Use and Care Manual*** completely before using this appliance. Save it for future reference. Keep your sales receipt or canceled check. Proof of original purchase date is required for warranty service.

For service and warranty information, see page 15.

If you have any questions call:

Dacor Customer Service

(800) 793-0093 (U.S.A. and Canada)
Monday — Friday 6:00 A.M. to 5:00 P.M. Pacific Time

Web site: www.dacor.com

Have the complete model and serial number identification of your cooktop ready. Record these numbers below for easy access. The numbers are found on a label on the bottom of the chassis.

Model Number _____

Serial Number _____

Date of Purchase _____

Dacor continuously improves the quality and performance of our products, so we may make changes to our appliance without updating this manual. Visit www.dacor.com to download the latest version of this manual.

Important Information About Safety Instructions

The ***Important Safety Instructions*** and warnings in this manual are not meant to cover all possible problems and situations that can occur. Use common sense and caution when installing, maintaining or operating this or any other appliance.

Always contact the Dacor Customer Service Team about problems or situations that you do not understand.

Safety Symbols, Labels, and Alerts

⚠ DANGER

Immediate hazards that **WILL** result in severe personal injury or death.

⚠ WARNING

Hazards or unsafe practices that **COULD** *result in severe* personal injury or death.

⚠ CAUTION

Hazards or unsafe practices that **COULD** *result in minor* personal injury or property damage.

⚠ DANGER

IMPORTANT: If you smell gas:

- Do not use or light any appliance.
- Do not touch any electrical switch or use any electrical devices including the telephone in your building.
- From a neighbor's phone, immediately call the gas supplier. Follow the gas supplier's instructions.
- If you cannot contact the gas supplier, call the fire department.

IMPORTANT: To avoid the possibility of explosion or fire, do not store or use combustible, flammable or explosive vapors and liquids (such as gasoline) inside or in the vicinity of this or any other appliance. Also keep items that could explode, such as aerosol cans away from the cooktop. Do not store flammable or explosive materials in adjacent cabinets or areas.

⚠ WARNING

NEVER use this appliance as a space heater to heat or warm the room. Doing so may result in carbon monoxide poisoning and overheating of the appliance.

⚠ WARNING

NEVER cover the slots between the burner control knobs and the trim rings on the cooktop. Doing so blocks air flow through the cooktop and may cause carbon monoxide poisoning. Aluminum foil linings may also trap heat, causing a fire hazard. Keep all the slots clear of grease and grime.

CALIFORNIA PROPOSITION 65 WARNING

The burning of gas cooking fuel generates some by-products that are on the list of substances which are known by the State of California to cause cancer or reproductive harm. California law requires businesses to warn customers of potential exposure to such substances. To minimize exposure to these substances, always operate this unit according to the use and care manual, ensuring you provide good ventilation when cooking with gas.

READ AND SAVE THESE INSTRUCTIONS

Important Safety Instructions

General Safety Precautions

To reduce the risk of fire, electric shock, serious injury or death when using your cooktop, follow basic safety precautions, including the following:

⚠ WARNING

- If you receive a damaged product, immediately contact your dealer or builder. Do not install or use a damaged appliance.
- Make sure that the cooktop has been properly installed and grounded by a qualified installer according to the accompanying installation instructions. Have the installer show you the location of the gas shut off valve and the power cord so that you know where and how to turn off the gas supply and disconnect power to the cooktop.
- Do not install, repair or replace any part of the cooktop unless specifically recommended in the literature accompanying it. A qualified service technician should perform all other service.
- Before performing any type of service, make sure that the gas supply is turned off and the power cord to the cooktop is disconnected.
- Only use this cooktop for cooking tasks expected of a home appliance as outlined in this manual. This cooktop is not intended for commercial use.
- DO NOT TOUCH THE SURFACES OF THE COOKTOP DURING OR IMMEDIATELY AFTER USE. After use, make sure these surfaces have had sufficient time to cool before touching them.
- Make sure individuals who use the cooktop are able to operate it properly.
- Never allow anyone, including children to sit, stand or climb on any part of the cooktop. Doing so may cause damage, serious injury, or death.
- Do not leave children alone or unattended in the area around the cooktop. Do not allow children to play with the controls, pull on the handle or touch other parts of the cooktop.
- Do not store items of interest to children on top of or above the cooktop. Children could be burned or injured while climbing on the appliance.
- Do not attempt to use this appliance in the event of a power failure. If a power failure occurs while operating the cooktop, turn all control knobs to the **OFF** position.
- Do not tamper with the controls. Do not adjust or alter any part of the cooktop unless specifically instructed to do so in these instructions.
- Do not cover the burners and grates with anything except properly selected cookware. Decorative covers may cause a fire hazard or damage to the cooktop if a burner is accidentally turned on with the cover in place.

⚠ WARNING

- Do not leave the cooktop unattended while in use to avoid the possiblity of fire.
- Do not heat unopened food containers such as baby food jars and cans. Pressure build up may cause the container to burst and cause injury.
- Clean the cooktop thoroughly before operating it for the first time.
- Keep flammable items, such as paper, cardboard, plastic and cloth away from the burners and other hot surfaces. Do not allow pot holders to touch hot surfaces or gas burners.
- Do not wear loose or hanging apparel while using the cooktop. Do not allow clothing to come into contact with the cooktop and surrounding areas during and immediately after use.
- Do not use towels or bulky cloth as pot holders.
- Do not hang flammable or heat sensitive objects over the cooktop.
- If the cooktop is near a window, do not use long curtains as window treatment. The curtains could blow over the cooktop and create a fire hazard.
- Clean and maintain the cooktop regularly as instructed in this manual. Keep the entire cooktop, ventilation filters and cooktop hoods free of grease that could catch fire.
- Use cookware only for its intended purpose. Check the manufacture's recommendations before use to determine if a utensil is suitable for use on a cooktop. Certain types of glass, ceramic and earthenware are not suitable for use on a cooktop. Personal injury or damage may result from the improper use of cookware.
- Select cookware carefully. Use cookware of the proper size, material and construction for the particular type of cooking being done. Cookware needs to be large enough to contain the desired quantity of food without boil-overs or spill-overs. Choose pans with easy to hold handles that will stay cool while cooking. Do not use cookware with loose handles. Avoid using pans that are too heavy to lift safely.
- Do not allow pots or pans to boil dry.
- Use extreme caution if adding water to food on a hot cooktop. The steam can cause serious burns or scalds.

Important Safety Instructions

⚠ WARNING

- Use only dry pot holders when removing food and cookware from the cooktop. Wet pot holders can cause steam burns.
- Make sure that all the cooktop parts are dry before lighting a burner.
- Turn the knobs to the OFF position prior to removing them from the valve stems.
- The cooktop should never be operated without the knobs in place.
- Non-stick coatings, when heated, can be harmful to pet birds. Relocate pet birds to a separate, well-ventilated room while using the appliance.
- When deep fat frying:
  - ◊ Be certain that the pan is large enough to contain the desired volume of food without overflow caused by the bubbling of the fat. Never leave a deep fat fryer unattended.
  - ◊ Avoid frying moist or frost-covered foods. Foods with high water content may cause spattering or spilling of the hot fat.
  - ◊ Heat fat slowly and stir together any combination of oils and fats prior to applying heat. Use a deep fat frying thermometer to avoid heating the fat to temperatures above the flash point.
- This appliance is equipped with a three-prong grounding plug for your protection against possible electric shock hazards. If only a two-prong outlet is available, it is the customer's responsibility to have it replaced by a licensed electrician with a dedicated, grounded three-prong electrical outlet.

Under any circumstances:

- DO NOT cut or remove the third (ground) prong from the power cord.
- DO NOT use an adapter plug.
- DO NOT use an extension cord.
- DO NOT use a power cord that is frayed or damaged.
- DO NOT plug the cooktop into an electrical outlet with a ground fault interrupter (GFI).

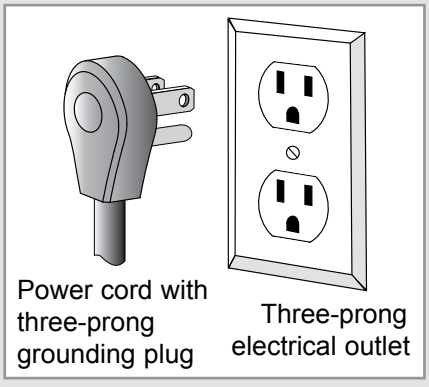

Power cord with three-prong grounding plug

Three-prong electrical outlet

⚠ WARNING

TO REDUCE THE RISK OF INJURY TO PERSONS IN THE EVENT OF A RANGE TOP GREASE FIRE:

a. SMOTHER FLAMES with a close-fitting lid, cookie sheet or metal tray, then turn off the burner. BE CAREFUL TO PREVENT BURNS. If the flames do not go out immediately, EVACUATE AND CALL THE FIRE DEPARTMENT.

b. NEVER PICK UP A FLAMING PAN - you may be burned.

c. DO NOT USE WATER, including wet dish cloths or towels - a violent steam explosion may result.

d. Use a fire extinguisher ONLY if:

- ◊ You have a Class ABC extinguisher and you already know how to operate it.
- ◊ The fire is small and contained in the area where it started.
- ◊ The fire department is being called.
- ◊ You can fight the fire with your back to an exit.

PROLONGED POWER FAILURE

Do not attempt to use this appliance during a continuous power failure.

⚠ CAUTION

- Do not allow acids (citrus juices, tomato sauces, etc.) to remain on the cooktop's surfaces. The porcelain finish may stain.
- Never use the cooktop surface as a cutting board.
- Do not try to remove heavy spills with a sharp object such as a knife or metal spatula. Sharp objects may scratch the cooktop's surfaces.
- Do not expose the knobs or trim rings to direct flame, hot utensils or other sources of heat.

Getting to Know Your Cooktop

Parts of the Cooktop

SimmerSear™ Burners: Dacor's exclusive precision burner control system. Model DYCT304G is equipped with one SimmerSear burner. Model DYCT365G is equipped with two. The SimmerSear™ burner has a wider range of heat settings than the single burners. The wider range allows you precise heat control from simmer (low) to sear (high).

Sealed Burners: Gaskets around the underside of all burner bases prevent spilled liquids from leaking into the cooktop's internal parts.

Long-Life Grates: The porcelain coated cast iron grates support the cookware during use. They are removable to allow the area below and around the burners to be cleaned easily.

Spill Tray: This easy-clean tray catches all food that falls through the grates. The tray also protects the cooktop from boil-overs and drips.

Illumina™ Burner Control Knobs: Intuative control knobs glow with Dacor's signature flame-blue light to always let you know when that burner is on.

Trim Rings: Located under the control knobs, trim rings display the burner and flame settings. The trim rings around SimmerSear knobs display the simmer settings and have a flame-blue simmer indicator light. See ***Operating Your Cooktop.***

Other Features

Flameless Ignition: The cooktop generates a spark that ignites a burner when you turn the knob to the *flame* icon.

Perma-Flame™: The Perma-Flame instant re-ignition feature automatically and quickly relights a burner. Experience uninterupted cooking from continious heating.

Smart Flame™ Technology: All burners are equipped with Dacor's Smart Flame technology. It reduces the temperature under the fingers of the porcelain-coated cast iron grates. Smart-Flame extends the life of the grate and protects the finish.

DYCT304G

- **A SimmerSear™ Burner:** 650-15,000 BTU
- **B Single Burner:** 12,500 BTU
- **C Single Burner:** 9,500 BTU

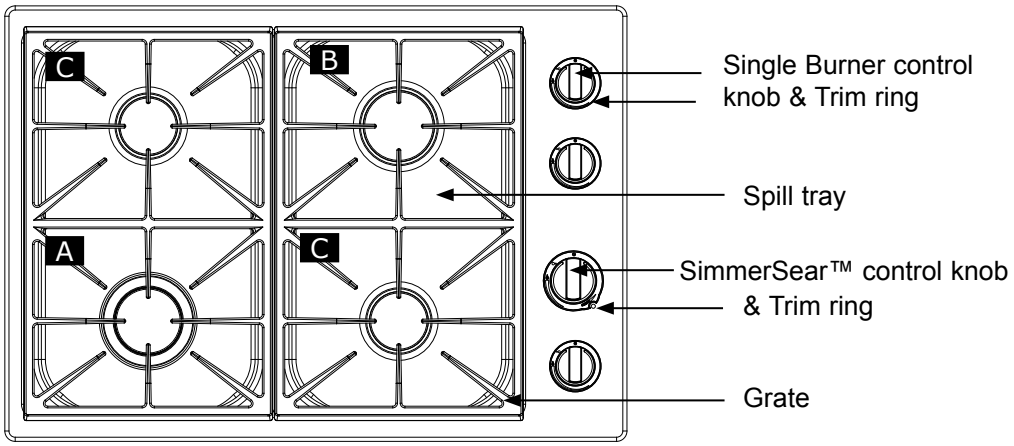

DYCT304G

DYCT365G

- **D SimmerSear™ Burner:** 750-18,000 BTU
- **E SimmerSear™ Burner:** 650-12,500 BTU
- **F Single Burner:** 12,500 BTU
- **G Single Burner:** 9,500 BTU

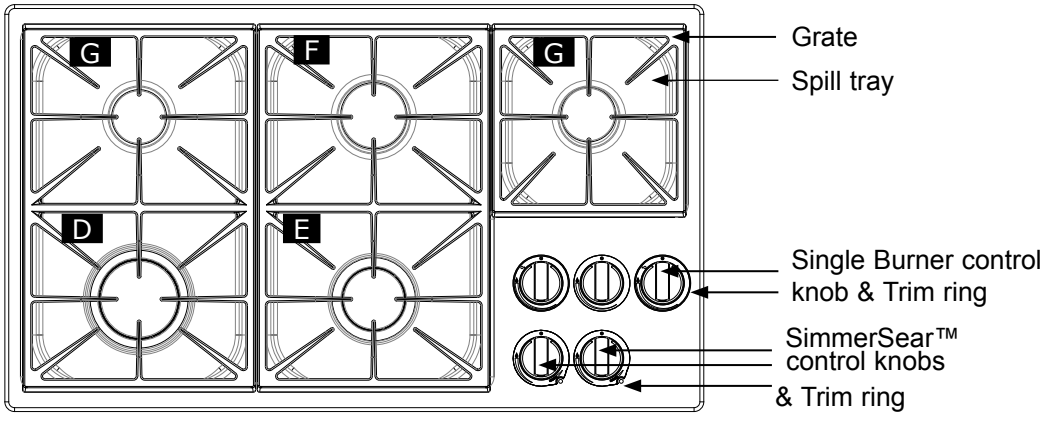

DYCT365G

Setting Up Your Cooktop

Burner and Grate Assembly

⚠ WARNING

Assemble the burners and grates only when the cooktop is cool.

SimmerSear™ Burner

Model DYCT365G: be sure to match the correct sizes of components with each other.

1. Place the burner skirt over each SimmerSear™ burner head and base as shown.
2. Put the burner cap on the burner head of each SimmerSear™ burner as shown below. Center the bottom of the cap inside the base.
3. Put the cap cover on top of each SimmerSear™ burner cap. The ridge around the lip of the cap secures the cover to the cap.

* The burner head on the SimmerSear™ burner assembly is permanently attached to the burner base. It cannot be removed by the user.

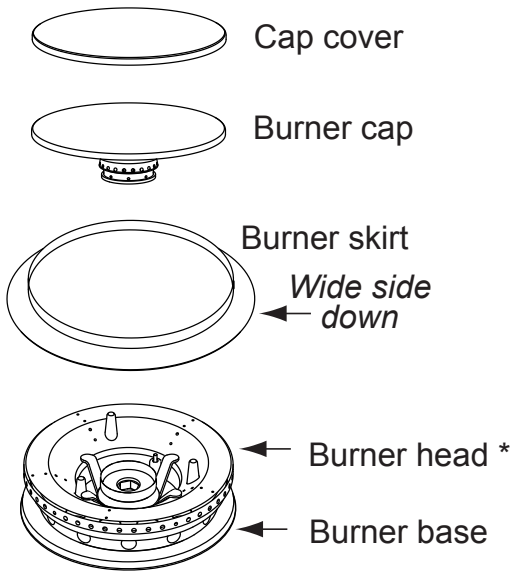

SimmerSear™ Burner Assembly

Single Burner

1. Put the burner heads on the burner bases as shown below. Match the correct sizes of heads to bases.
2. Line up the notch on the bottom of each head with the ignitor on the matching base.
3. Twist each head back and forth slightly to make sure it is properly seated.
4. Put the cap covers on top of the burner heads. The ridge around the bottom edge of the cap cover goes around the top of the burner head.

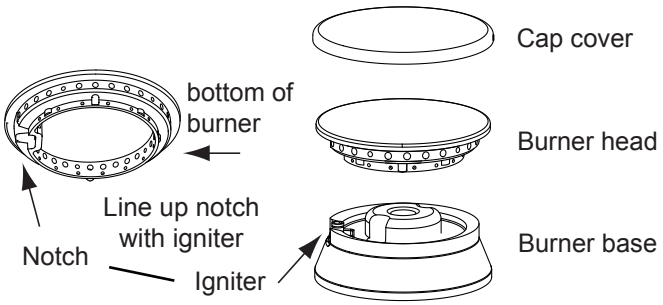

Single Burner Assembly

Grates

1. Gently set the grates on top of the spill tray.
2. Position the feet into the corresponding indentations located on the spill tray.

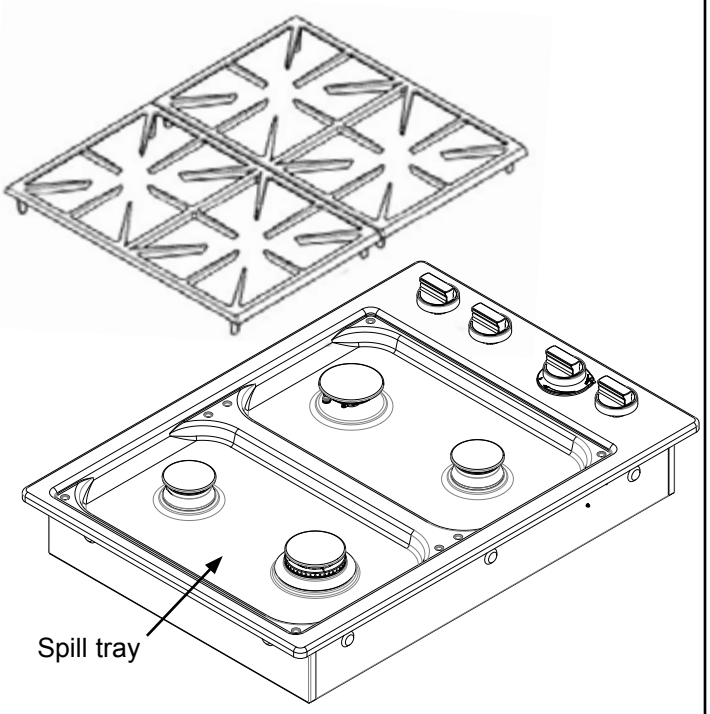

Grate Assembly

Selecting the Cookware

⚠ WARNING

- NEVER cover the slots between the burner control knobs and the trim rings on the cooktop. Doing so blocks air flow through the cooktop and may cause carbon monoxide poisoning. Keep all the slots clear of grease and grime.
- To avoid burns and scalding, always turn pan handles to a position where they cannot be easily hit. Also, handles should not extend over adjacent burners. Always set cookware gently onto the grates and center them so that they are well-balanced.
- Do not drag cookware across the grates. Sliding may damage the finish on the grates. Lift cookware to reposition it. Do not drop it on the grate.
- Cookware with rough bottoms can cause permanent damage to the coated surfaces on the grates.
- To avoid burns or fire hazard, reduce the flame level if it extends beyond the bottom of the cookware. A flame that extends up the sides of the pan is potentially dangerous.

For overall safety and best cooktop performance, select the correct cookware for the food being prepared. Improperly selected cookware will not cook food evenly or efficiently.

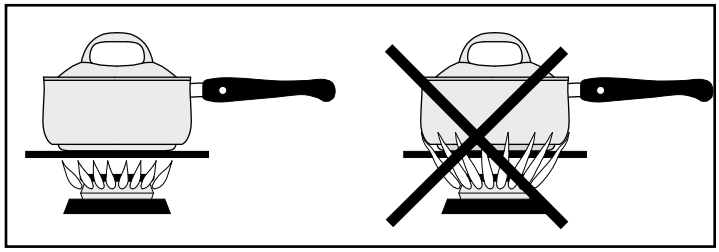

Use cookware that:

- Has flat, smooth bottoms.
- Is well balanced.
- Has tight fitting lids to keep heat, odors, and steam inside.

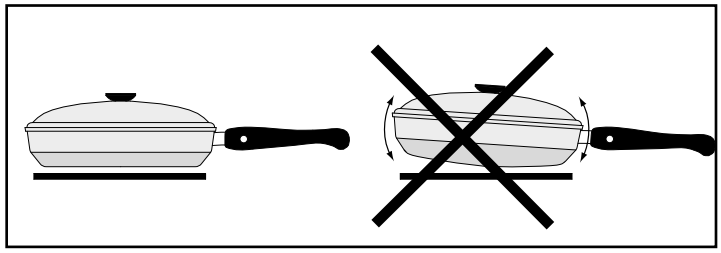

IMPORTANT: Avoid spills as much as possible. The porcelain surfaces of the grates, spill trays, and burner caps are acid-resistant but not acid-proof. Some foods can cause permanent damage if allowed to remain on porcelain surfaces.

Lighting a Burner

⚠ WARNING

- To avoid the chance of fire, explosion or carbon monoxide poisoning, do not attempt to use your cooktop without the burners completely and correctly assembled (see page 5). The burner rings spread the flame evenly around the burner cap. The burner rings must be fully seated for correct burner lighting and performance.
- In the interest of safety, always light the burner before putting the cooking utensil on the grate. Turn the burner knob to the off position before removing cookware. Always check the position of the control knobs to make sure the cooktop is off when you are finished cooking.
- Do not turn the knob past the **HIGH** flame mark until lit. Doing so may result in a burst of flame that could cause burns or damage to the surrounding area.
- Do not touch any part of the burner while the igniter is sparking. An electrical shock could result.
- Never light the burners with a match or other open flame.
- If the gas does not ignite after four seconds or if the flame goes out and gas escapes, turn the knob to **OFF**. Open a window and allow at least five minutes for the gas to dissipate. Repeat the lighting procedure.

To Light a Burner:

Refer to the illustrations to the right while following these instructions.

1. Press the knob that controls the burner (refer to the **burner indicator** icon) and turn it slowly toward the **light FLAME** icon. As you turn the knob, the igniter will spark until the flame ignites. The igniter will stop sparking when ignition occurs.
2. Once the burner is lit, adjust the flame height by turning the control knob.

- The thickness of the black line under the flame on the trim ring corresponds with the flame height.
- The flame height lowers as the knob moves away from the flame icon.

SimmerSear™ Burners

When turning the knob to the **SIMMER** flame level, only one of the two burners is used.

Burner Knob Icons and Operation

The icons that surround the knobs help show how to use and control the burner.

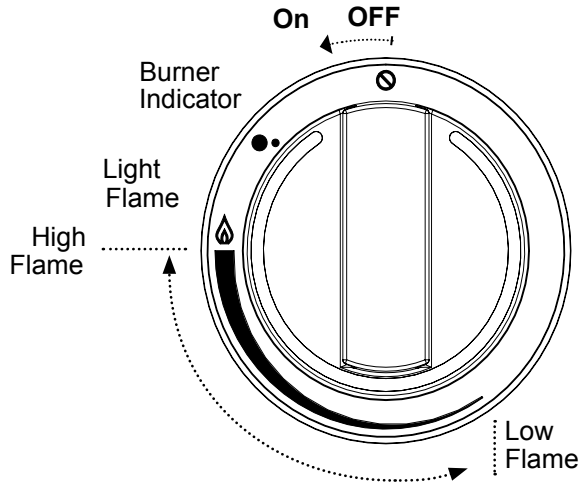

Single Burner Knob

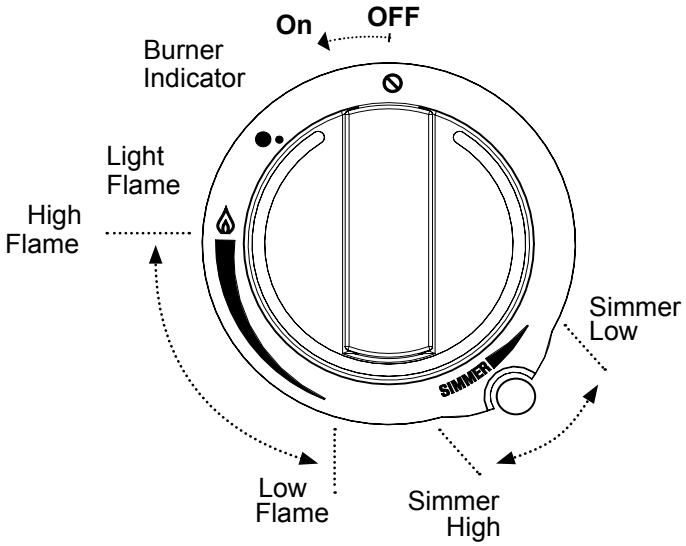

SimmerSear™ Burner Knob

IMPORTANT:

- When the cooktop is cool, the igniter may continue to spark if the burner knob is set to the **LOW** position. The burner will stop sparking when warm.
- The tendency to spark when cold can be reduced by using the burner at a higher flame for about 60 seconds. After 60 seconds, lower the flame to cook. The burner will also warm up faster if cookware is placed its grate.
- The igniter will also spark automatically if the flame is distorted by a draft or by the household ventilation system. Eliminate any drafts or reduce the ventilation blower speed to reduce this type of problem.
- To keep the burners operating properly, keep the burner igniters, burner rings, and burner caps clean and dry. See ***Care and Cleaning*** starting on page 9. Dirty or wet igniters will result in constant sparking, even if there is a flame present.
- The flame should burn evenly around the perimeter of the burner, except underneath each grate support finger, where the flame height is reduced by Dacor's Smart-Flame feature.
- A normal flame burns steady and blue. Foreign material in the gas line, especially in new construction, may cause an orange flame during initial use. The orange color will disappear with further use. Small yellow tips on the ends of the flames are normal when using LP gas.

Cooking Tips

For superior cooking performance and to save energy:

- Boil at the lowest flame necessary. Food cooks just as quickly at a gentle boil as it does at a vigorous, rolling boil. A stronger boil than is necessary wastes energy, cooks away moisture, and causes a loss in food flavor and nutrients.
- Use low or medium flame when cooking in cookware that is a poor conductor of heat, such as glass, ceramic, and cast iron cooking vessels. Reduce the flame until it spreads approximately 1/3 of the underneath area of the cookware to ensure even heating and to reduce scorching.
- Minimize the amount of liquid or fat to reduce cooking times.
- Use a timer rather than repeatedly removing the lid to check food. Doing so will decrease cooking time and save energy.
- Dacor's SimmerSear™ feature allows you precision control of the flame. The larger the burner size, the wider the range of control.
- See page 4 for the heat ranges of the different burners.

Accessories

Wok Ring (Part# AWR4): This wok ring is a safe, convenient way to stir fry. Place the ring on top of the grate, aligning the wok ring feet with the grate fingers. It will hold most standard-sized woks.

Griddle (Part# AG13): The AG13 easy clean griddle is coated with a non-stick finish. It is great for cooking pancakes, eggs, bacon, steaks, and various other pan-fried foods. It is designed to sit on top of your cooktop burner grates. A maximum setting of medium is recommended to avoid damage to the cooktop. See the instructions included with the griddle or at www.dacor.com for further information.

⚠ WARNING

- Clean only the parts of the cooktop listed in this manual. Clean them only in the manner specified.
- To avoid dangerous fumes or damage to your cooktop's surfaces and accessories, use only the types of cleaning solutions specified in this manual.
- To avoid electrical shock or burns, turn off the burners and make sure that all parts are cool before cleaning. DO NOT turn the burners on during cleaning.
- Do not use a steam cleaner to clean the cooktop. Steam could penetrate the electrical components and cause a short circuit. After cleaning the burners, reassemble all of the burner parts before attempting to operate the cooktop.
- After cleaning the burners, always dry and reassemble the cooktop parts completely before use. See page 5.

⚠ CAUTION

- Do not try to remove heavy spills with a sharp object such as a knife or metal spatula. Sharp objects may scratch your cooktop's surfaces.
- To prevent damage, do not use abrasive or corrosive cleaners or applicators such as steel wool or scouring pads, on any part of the cooktop unless instructed to do so. Use only a sponge, soft cloth, fibrous or plastic brush, or nylon cleaning pad for cleaning the surfaces of your cooktop.
- Take care when cleaning around the control valve stems. If you get moisture inside the holes in the chassis, damage to the cooktop can occur.
- Do not soak the knobs in water or put them in the dishwasher.

Cleaning the Cooktop

To keep the cooktop looking and operating its best, clean it after every use. Also, quickly wipe up spills that occur while cooking. Be careful not to touch any hot areas.

If you allow spills to sit on hot burner parts, they will burn and be very difficult to clean. Certain types of food, such as tomatoes, citrus juices, vinegar, alcohol and milk can damage the finishes if you allow them to stand for any length of time.

IMPORTANT: The cooktop is exposed to extremely high temperatures. The grates are under high stress when hot cookware is placed on them. Also, the cooktop parts are occasionally exposed to acidic food spill-overs. These severe conditions cause the porcelain enamel parts on your cooktop to undergo a change in appearance over time. If you care for and clean these parts carefully, you will slow down–but not eliminate–the aging process.

Disassembly

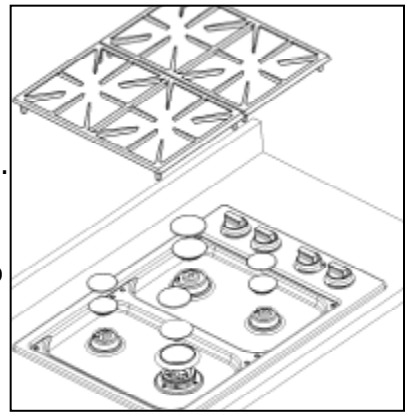

1. For safety, disconnect the cooktop power cord from the electrical outlet.
2. When the cooktop is cool, remove the grates from the top of the cooktop.
3. Disassemble the burners:

SimmerSear™ Burner Disassembly

Lift the cap cover and burner cap off of the burner head. However, the burner head on the SimmerSear™ burner is not removable.

Single Burner Disassembly

Lift the cap cover and burner head off of the burner base.

Cleaning the Grates, Spill Trays, and Wok Ring

⚠ WARNING

Do not clean the cooktop grates, burner parts or Wok ring in a dishwasher. They will be damaged.

IMPORTANT: **DO NOT** use any of the cleaners listed below to clean the burners and igniters. See the facing page for burner and igniter cleaning instructions. Also, if your cooktop is equipped with stainless steel spill trays, see the ***Cleaning Stainless Steel Surfaces*** section for spill tray cleaning instructions.

The grates, the spill tray (on some models) and optional Wok ring are coated with a porcelain finish.

- For everyday cleaning, use a soft cloth or non-abrasive pad with warm soapy water to clean all of the porcelain parts.
- If necessary, tough stains may be removed by applying full-strength sprays such as Simple Green™, Ajax™ All-Purpose Cleaner or Formula 409™. To minimize wear, use the mildest cleaner needed to get the surface clean.
- For extremely stubborn stains, you may use a mildly abrasive cleaner or applicator, such as Soft Scrub™, Bon Ami™, S.O.S.® pads or other soap-filled steel wool pads. **Use these cleaners carefully and only occasionally.** Aggressive or extensive use of these types of abrasives will damage the finish. **Damage to the finish due to the use of abrasives is not covered under your warranty.**

Care and Cleaning

Cleaning the Burners and Igniters

⚠ WARNING

Use care while cleaning the igniters. The porcelain is fragile and can crack or break.

IMPORTANT: The igniters will not work properly if the other burner parts or the igniters themselves are not clean. Dirty or wet igniters may not spark at all.

After dissembling the burners, check for any dirt or grime deposited on the individual parts, including the igniters.

1. Clean completely around the igniter, including over and under the edge of the metal top and porcelain base. A firm toothbrush is also ideal for this task. Use care while cleaning because the porcelain is fragile and can crack or break. *Do not use water to clean the igniters. If necessary, use a small amount of rubbing alcohol to help dissolve grime.*
2. Examine the burner heads. Remove anything stuck in the holes with a straightened paper clip, wire or needle. Be careful not to scratch or damage the ring and head. Do not distort the shape of the burner head holes. Because the SimmerSear™ burner heads are not removable, they must be cleaned in place.
3. Clean all the burner parts, including the burner bases, with window cleaner or rubbing alcohol. Use a cleaning brush with plastic bristles or a firm toothbrush. When done, thoroughly rinse all parts with clean water. Completely dry all the parts before re-assembling them.
4. Assemble the cooktop according to the Burner and Grate Assembly Instructions on page 5. Test the burners after reassembling them (pages 6-7).

- If the flame is uneven, be sure that all the burner parts are correctly positioned, then check for any remaining dirt or grime on the burner parts or igniter. If erratic clicking still occurs, make sure the igniter is completely dry. If the unit still exhibits problems after drying, call your local Dacor Authorized Service Agent.

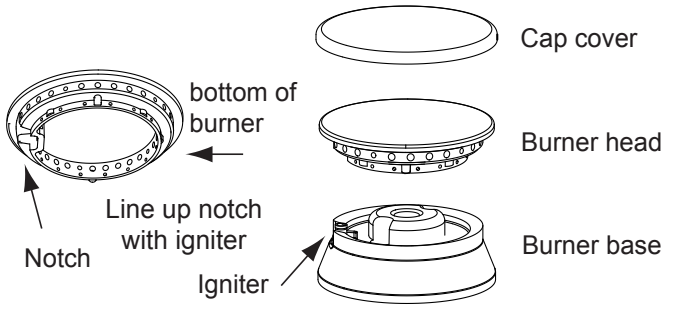

Single Burner Assembly

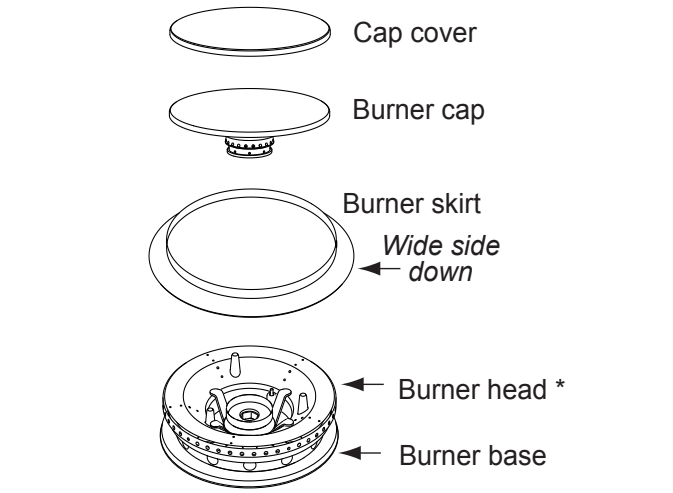

SimmerSear™ Burner Assembly

Cleaning Stainless Steel Surfaces

⚠ WARNING

Always wipe stainless steel (silver colored) surfaces with the grain. To prevent scratching, do not use abrasive cleaners or scrubbers on stainless steel surfaces.

- Clean only stainless steel surfaces with the Dacor Stainless Steel Cleaner included with your cooktop. Use it according to the directions on the package. You may order additional stainless steel cleaner at www.everythingdacor.com. Order part number A302.
- You can also clean stainless steel surfaces with a mild solution of detergent and warm water. Rinse and dry with a soft, lint-free cloth.

continued...

Care and Cleaning

Cleaning the Knobs and Trim Rings

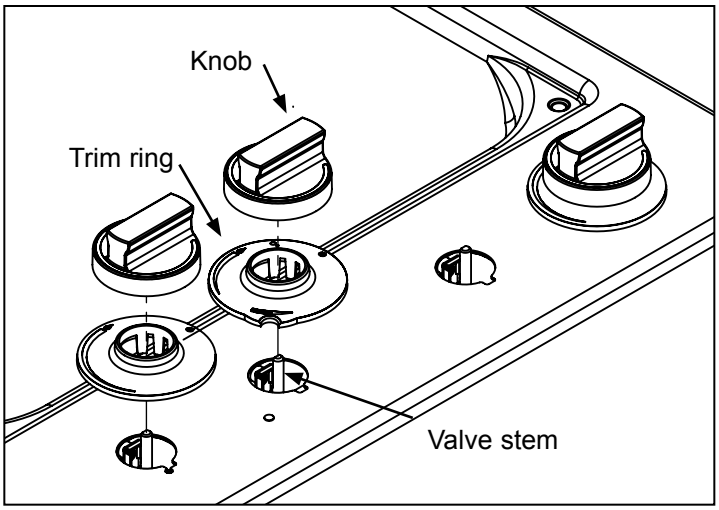

1. Turn the knobs to the OFF position.
2. Disconnect the cooktop power plug from the electrical outlet.
3. Grasp each knob and pull straight up to remove.
4. The trim rings can be removed for cleaning if necessary: Grasp each trim ring and pull straight up to remove.
5. Wash the knobs and trim rings with liquid dish-washing soap.
6. Lay the trim rings over the valve stems. Move the flame icon to the 9 o'clock position.

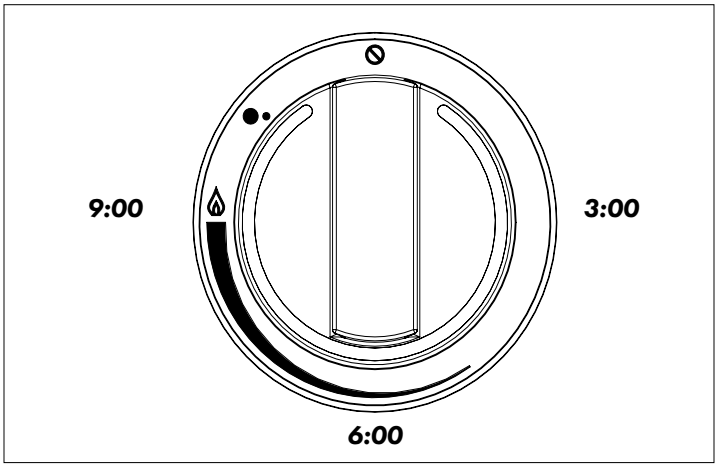

7. Gently twist untill the clasps align inside the cylinder and the ring seats into place.
8. Push firmly into position. Repeat for each trim ring.
9. To replace the knobs, align the "D-shaped" opening on the bottom of the knob with the end of the valve stem. Carefully push the knob until it stops.
10. With dry hands, plug the cooktop power cord into an electrical outlet.

Cleaning the Griddle Accessory

Clean the griddle after each use. Wash it thoroughly in hot soapy water to avoid stains from grease build-up. The griddle is coated with a non-stick coating to help with easy cleaning. Warm water and liquid detergent are all that is needed. Remove stubborn spots with a non-abrasive plastic mesh pad. To prevent scratching, do not use abrasives or abrasive cleaners. Use the soft side of a sponge to scrub. Dry with a lint-free cloth.

Ordering Replacement Parts

The rubber feet on the bottom of the grate can be replaced if they are lost or damaged.

If necessary, you may use a pair of needle nose pliers to pull and remove the feet from the grate.

If any other parts need to be replaced, please refer following page for part numbers and contact information.

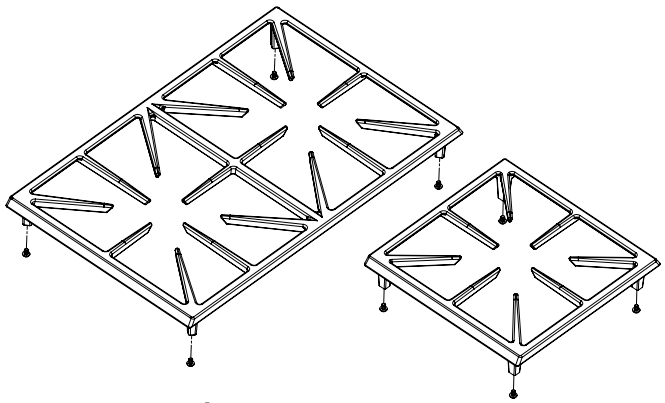

Grates and Support Feet

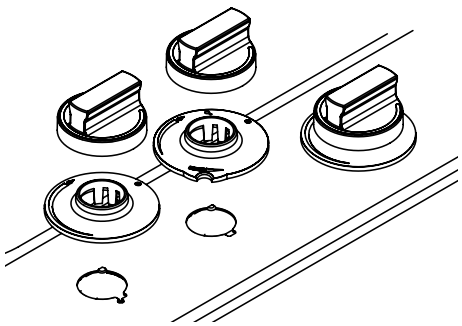

Knobs and Trim Rings

Replacement Parts List

Replacement parts can be obtained by contacting Dacor Customer Service.

Dacor Customer Service

Phone: (800) 793-0093 (U.S.A. and Canada)
Monday — Friday 6:00 A.M. to 5:00 P.M. Pacific Time

Cooktop	Model **DYCT304G**	Model **DYCT365G**
Hold-Down Bracket w/screws (set of 2)	PN 12269	PN 12269
Regulator (Natural Gas models)	PN 62834	PN 62834
Regulator (LP Gas models)	PN 72980	PN 72980
Knobs	PN 109321	PN 109321
Trim Rings: Single LR (left rear)	PN 108924-03	--
Trim Rings: Single RF, RR (right front, right rear)	PN 108924-02	--
Trim Rings: SimmerSear™ LF (left front)	PN 108925-02	--
Trim Rings: Single RR, CR, LR (right rear, center rear, left rear)	--	PN 108924-01
Trim Rings: SimmerSear™ LF, CF (left front, center front)	--	PN 108925-01
Grate: large	PN 108900	PN 108900
Grate: small	--	PN 108901
Grate support feet (4)	PN 103712	PN 103712
Stainless steel cleaner	PN A302	PN A302

Model DYCT304G

Burner Part	Dacor P/N
Cap Cover: LF (left front)	92231
Burner Cap: LF (left front)	92460
Burner Skirt: LF (left front)	92459
Cap Cover: LR, RF (left rear, right front)	92235
Burner Head: LR, RF (left rear, right front)	103735
Cap Cover: RR (right rear)	92236
Burner Head: RR (right rear)	103737

Model DYCT365G

Burner Part	Dacor P/N
Cap Cover: LF (left front)	92232
Burner Cap: LF (left front)	92230
Burner Skirt: LF (left front)	92226
Cap Cover: LR, RR (left rear, right rear)	92235
Burner Head: LR, RR left rear, right rear	103735
Cap Cover: CF (center front)	92231
Burner Cap: CF (center front)	92460
Burner Skirt: CF (center front)	92459
Cap Cover: CR (center rear)	92236
Burner Head: CR (center rear)	103737

Replacement Parts Diagram

Individual Parts of the Burners

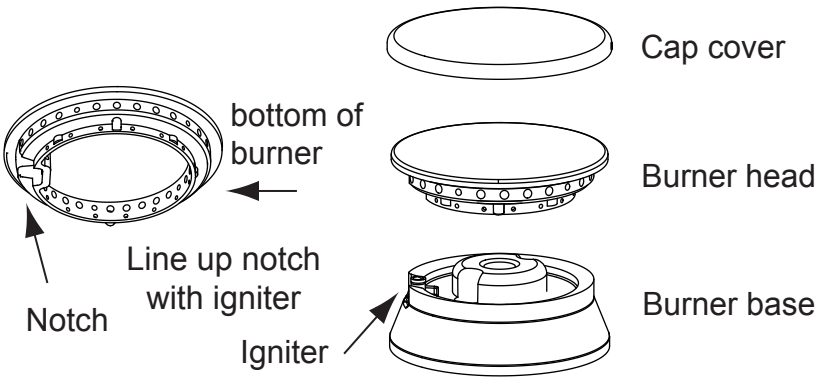

Single Burner

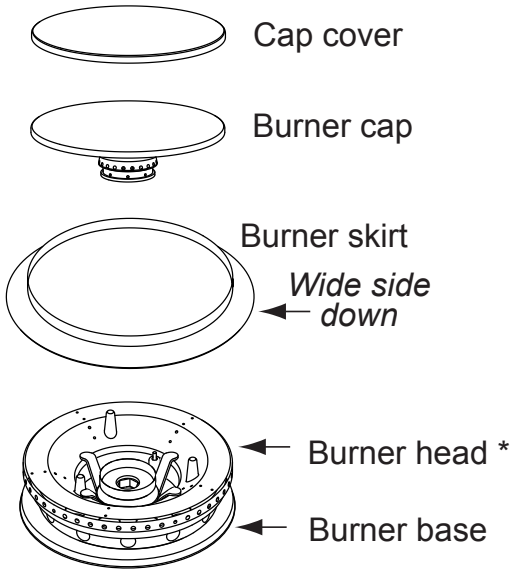

SimmerSear™ Burner

* The SimmerSear burner head is permanently affixed to the base and cannot be removed by the user.

Cooktop Layout

Burner Location

- LR Left Rear
- RR Right Rear
- CR Center Rear
- LF Left Front
- RF Right Front
- CF Center Front

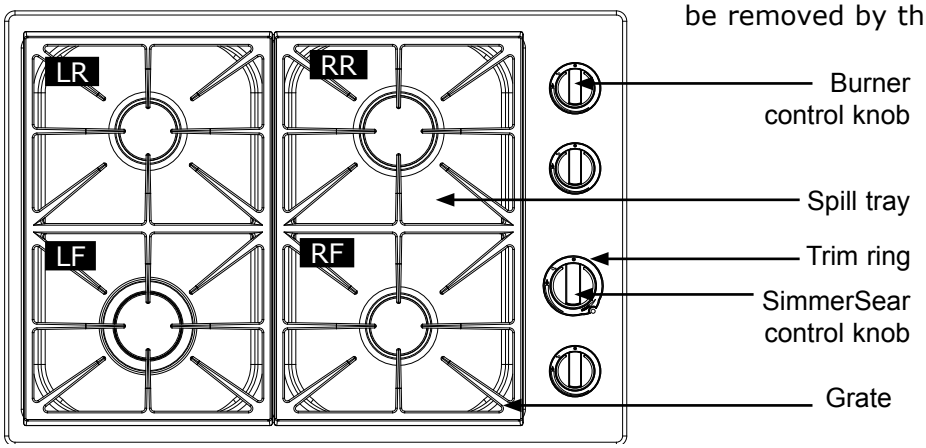

DYCT304G: Top View

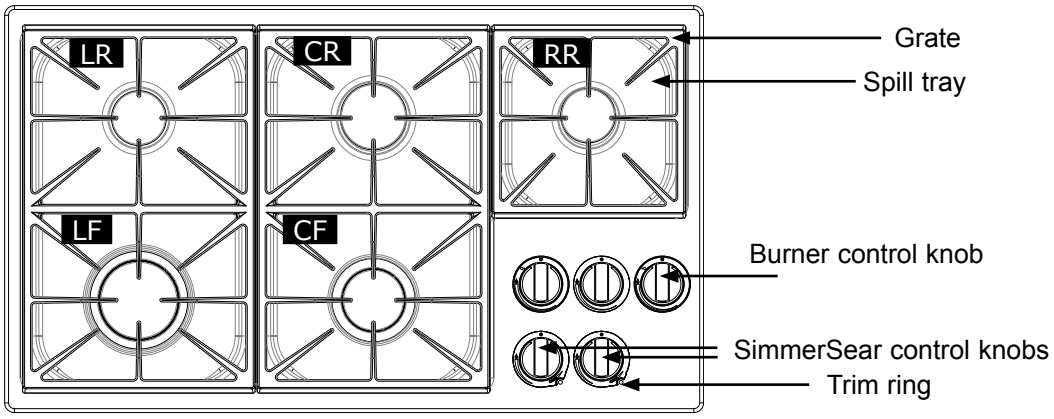

DYCT365G: Top View

Before You Call for Service

Problem — Solution Guide

Problem	May Be Caused By	What to Do (Solution)
Nothing works.	Cooktop is not connected to electrical power.	Check to make sure power cord is connected to an electrical outlet.
	Power to electrical outlet is off.	Turn on power at circuit breaker or fuse box. Check for tripped breaker or blown fuse.
	Power outage.	Contact your power company.
Igniters do not spark.	Power not supplied to unit.	See ***Nothing Works*** above.
	Wet or dirty igniter.	Clean and dry igniter and burner assembly according to ***Care and Cleaning*** section.
No flame.	Igniter not working (no clicking sound).	See ***Igniters do not spark*** above.
	Wet or dirty igniter.	Clean and dry according to ***Care and Cleaning*** section.
	Gas is turned off.	Make sure the gas supply valve is in the ON position.
	Gas supply is interrupted.	Contact your gas company.
Burner goes out at low setting.	Low gas pressure.	Contact your gas company to have gas pressure tested.
Flame is distorted, yellow or very large.	Burner parts are dirty or clogged.	Clean and dry according to ***Care and Cleaning*** section.
	Burner parts are not properly positioned or seated.	Make sure burner is assembled according to the ***Setting Up Your Cooktop*** section.
	Cooktop is for a different type of gas (Natural or LP) or set up for different altitude.	Have a qualified service technician check to make sure that the cooktop is set up for the type of gas and the correct altitude.
	Gas regulator is not installed or faulty.	Have a qualified service technician check the gas regulator.
Igniter continues to spark (click) after flame ignites.	Burner is cold.	Burners may continue to spark for up to 60 seconds when cold and set to low. See ***Operating Your Cooktop*** section for more information on how to minimize.
	Flame distorted by air draft.	Minimize any air drafts around the cooktop. Close nearby windows.
	Wet or dirty igniter.	Clean and dry according to ***Care and Cleaning*** section.
	Burner parts are wet or dirty.	Clean and dry according to ***Care and Cleaning*** section.
	Burner parts not properly positioned.	Make sure burner is assembled according to the ***Setting Up Your Cooktop*** section.
	Power supply polarity is reversed.	Have a licensed electrician check the electrical outlet.

Warranty and Service

Getting Help

Before you request service:

1. Review the ***Before You Call For Service*** section of this manual (page 14).
2. Use the helpful tips found in our ***Problem — Solution Guide***.
3. Become familiar with the warranty terms and conditions of your product.
4. If none of these tips or suggestions resolves your problem, call our Customer Service center at the number below.

Dacor's Customer Service center is available 6:00 A.M. – 5:00 P.M. Pacific Time

For warranty repairs or questions and for Dacor Distinctive Service (DDS) in the US and Canada
Phone: (800) 793-0093, extension 2822

For non-warranty repairs or questions in the US and Canada
Phone: (800) 793-0093, extension 2813

Contact us through our website at:

www.dacor.com/contact-us

Warranty

What Is Covered

CERTIFICATE OF WARRANTIES
DACOR GAS COOKTOPS

WITHIN THE FIFTY STATES OF THE U.S.A., THE DISTRICT OF COLUMBIA AND CANADA*:

FULL ONE-YEAR WARRANTY

The warranty applies only to the Dacor appliance sold to the first use purchaser, starting from the date of original retail purchase or closing date for new construction, whichever period is longer. Warranty is valid on products purchased brand new from a Dacor Authorized Dealer, or other seller authorized by Dacor.

If your Dacor product fails to function within one year of the original date of purchase, due to a defect in material or workmanship, Dacor will remedy it without charge to you.

All cosmetic damage (such as scratches on stainless steel, paint/porcelain blemishes, etc.) to the product or included accessories must be reported to Dacor within 60 days of the original purchase date to qualify for warranty coverage.

Consumable parts such as filters and light bulbs are not covered and are the responsibility of the purchaser.

LIMITATIONS OF COVERAGE

Service will be provided by a Dacor designated service company during regular business hours. Please note service providers are independent entities and are not agents of Dacor.

Dealer display and model home display products with a production date greater than 5 years, products sold "As Is," and products installed for non-residential use, which include but are not limited to religious organizations, fire stations, bed and breakfast and spas carry a one year parts warranty only. All delivery, installation, labor costs and other service fees are the responsibility of the purchaser.

Warranty will be null and void on product that has altered, defaced, or missing serial numbers and tags.

The owner must provide proof of purchase or closing statement for new construction upon request.
All Dacor products must be accessible for service.

*Warranty is null and void if non-ETL or non-CUL approved product is transported from the U.S.A.

OUTSIDE THE FIFTY STATES OF THE U.S.A., THE DISTRICT OF COLUMBIA AND CANADA:

LIMITED FIRST YEAR WARRANTY

If your Dacor product fails to function within one year of the original date of purchase due to a defect in material or workmanship, Dacor will furnish a new part, F.O.B. factory to replace the defective part.

All delivery, installation, labor costs and other service fees are the responsibility of the purchaser.

What Is Not Covered

- Slight color variations may be noticed because of differences in painted parts, kitchen lighting, product placement and other factors; this warranty does not apply to color variation.
- Service calls to educate the customer on proper use and care of the product.
- Service fees for travel to islands and remote areas, which include but are not limited to, ferries, toll roads or other travel expenses.
- Consequential or incidental damage, including but not limited to food or medicine loss, time away from work or restaurant meals.
- Failure of the product when used for commercial, business, rental or any application other than for residential consumer use.
- Failure of the product caused by improper product installation.
- Replacement of house fuses, fuse boxes or resetting of circuit breakers.
- Damage to the product caused by accident, fire, flood, power interruption, power surges or other acts of God.
- Liability or responsibility for damage to surrounding property including cabinetry, floors, ceilings and other structures or objects around the product.
- Breakage, discoloration, or damage to glass, metal surfaces, plastic components, trim, paint or other cosmetic finish caused by improper usage, care, abuse, or neglect.

Out of Warranty

Should you experience a service issue beyond the standard warranty period, please contact us. Dacor reviews each issue and customer concern to provide the best possible solution based on the circumstances.

THE REMEDIES PROVIDED IN THE ABOVE EXPRESS WARRANTIES ARE THE SOLE AND EXCLUSIVE REMEDIES. THEREFORE, NO OTHER EXPRESS WARRANTIES ARE MADE, AND OUTSIDE THE FIFTY STATES OF THE UNITED STATES, THE DISTRICT OF COLUMBIA AND CANADA, ALL IMPLIED WARRANTIES, INCLUDING BUT NOT LIMITED TO, ANY IMPLIED WARRANTY OF MERCHANTABILITY OR FITNESS FOR A PARTICULAR USE OR PURPOSE, ARE LIMITED IN DURATION TO ONE YEAR FROM THE DATE OF ORIGINAL PURCHASE. IN NO EVENT SHALL DACOR BE LIABLE FOR INCIDENTAL EXPENSE OR CONSEQUENTIAL DAMAGES. IN THE EVENT DACOR PREVAILS IN ANY LAWSUIT, DACOR SHALL BE ENTITLED TO REIMBURSEMENT OF ALL COSTS AND EXPENSES, INCLUDING ATTORNEY'S FEES, FROM THE DACOR CUSTOMER. NO WARRANTIES, EXPRESS OR IMPLIED, ARE MADE TO ANY BUYER FOR RESALE.

Some states do not allow limitations on how long an implied warranty lasts, or do not allow the exclusion or limitation of inconsequential damages, therefore the above limitations or exclusions may not apply to you. This warranty gives you specific legal rights, and you may also have other rights that vary from state to state.

fold here

NO POSTAGE
NECESSARY
IF MAILED
IN THE
UNITED STATES

BUSINESS REPLY MAIL
FIRST-CLASS MAIL PERMIT NO 1600 CITY OF INDUSTRY CA

POSTAGE WILL BE PAID BY ADDRESSEE

DACOR
ATTN WARRANTY PROCESSING DEPT
PO BOX 90070
CITY OF INDUSTRY CA 91715-9907

dacor
The Life of the Kitchen.®

Please visit www.dacor.com to activate your warranty online.

WARRANTY INFORMATION

IMPORTANT:

Your warranty will not be activated until you activate it online or return this form to Dacor. If you have purchased more than one Dacor product, please return all forms in one envelope or activate the warranty for each product online.

Please rest assured that under no conditions will Dacor sell your name or any of the information on this form for mailing list purposes. We are very grateful that you have chosen Dacor products for your home and do not consider the sale of such information to be a proper way of expressing our gratitude!

cut here

Owner's Name: _____
Last (Please Print or Type) First Middle

Street: _____

City: _____ State: _____ Zip: _____

Purchase Date: _____ Email: _____ Telephone: _____

Dealer: _____

City: _____ State: _____ Zip: _____

Your willingness to take a few seconds to fill in the section below will be sincerely appreciated. Thank you.

1. How were you **first** exposed to Dacor products? (Please check one only.)

- ❑ A. T.V. Cooking Show
- ❑ B. Magazine
- ❑ C. Appliance Dealer Showroom
- ❑ D. Kitchen Dealer Showroom
- ❑ E. Home Show
- ❑ F Builder
- ❑ G. Architect/Designer
- ❑ H. Another Dacor Owner
- ❑ I. Model Home
- ❑ J. Other _____

2. Where did you buy your Dacor appliances?

- ❑ A. Appliance Dealer
- ❑ B. Kitchen Dealer
- ❑ C. Builder Supplier
- ❑ D. Builder
- ❑ E. Other _____

3. For what purpose was the product purchased?

- ❑ A. Replacement ***only***
- ❑ B. Part of a Remodel
- ❑ C. New Home
- ❑ D. Other _____

4. What is your household income?

- ❑ A. Under $75,000
- ❑ B. $75,000 – $100,000
- ❑ C. $100,000 – $150,000
- ❑ D. $150,000 – $200,000
- ❑ E. $200,000 – $250,000
- ❑ F. Over $250,000

5. What other brands of appliances do you have in your kitchen?

A. Cooktop _____ C. Dishwasher _____
B. Oven _____ D. Refrigerator _____

cut here

6. Would you buy or recommend another Dacor product?

❑ Yes ❑ No

Comments: _____

Thank you very much for your assistance. The information you have provided will be extremely valuable in helping us plan for the future and giving you the support you deserve.

Web site: www.dacor.com
Corporate phone: (800) 793-0093