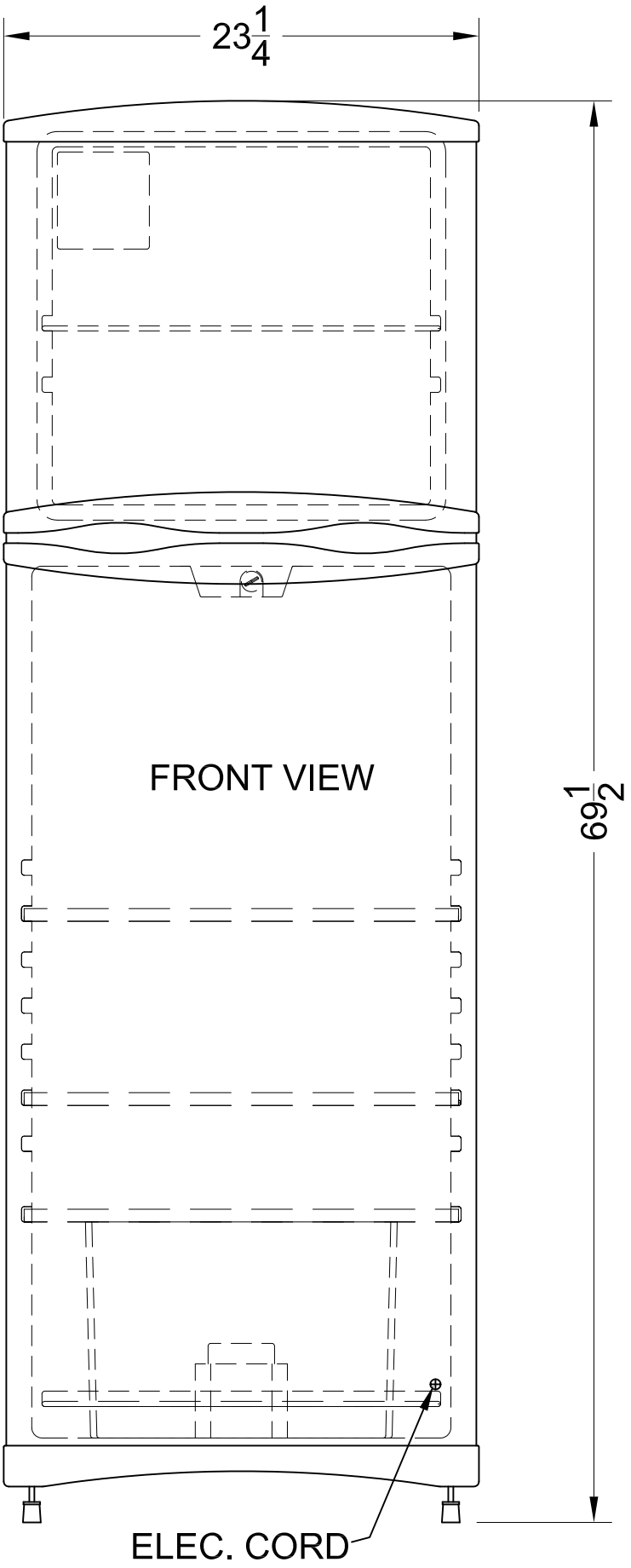
23 1/4
69 1/2
FRONT VIEW
ELEC. CORD

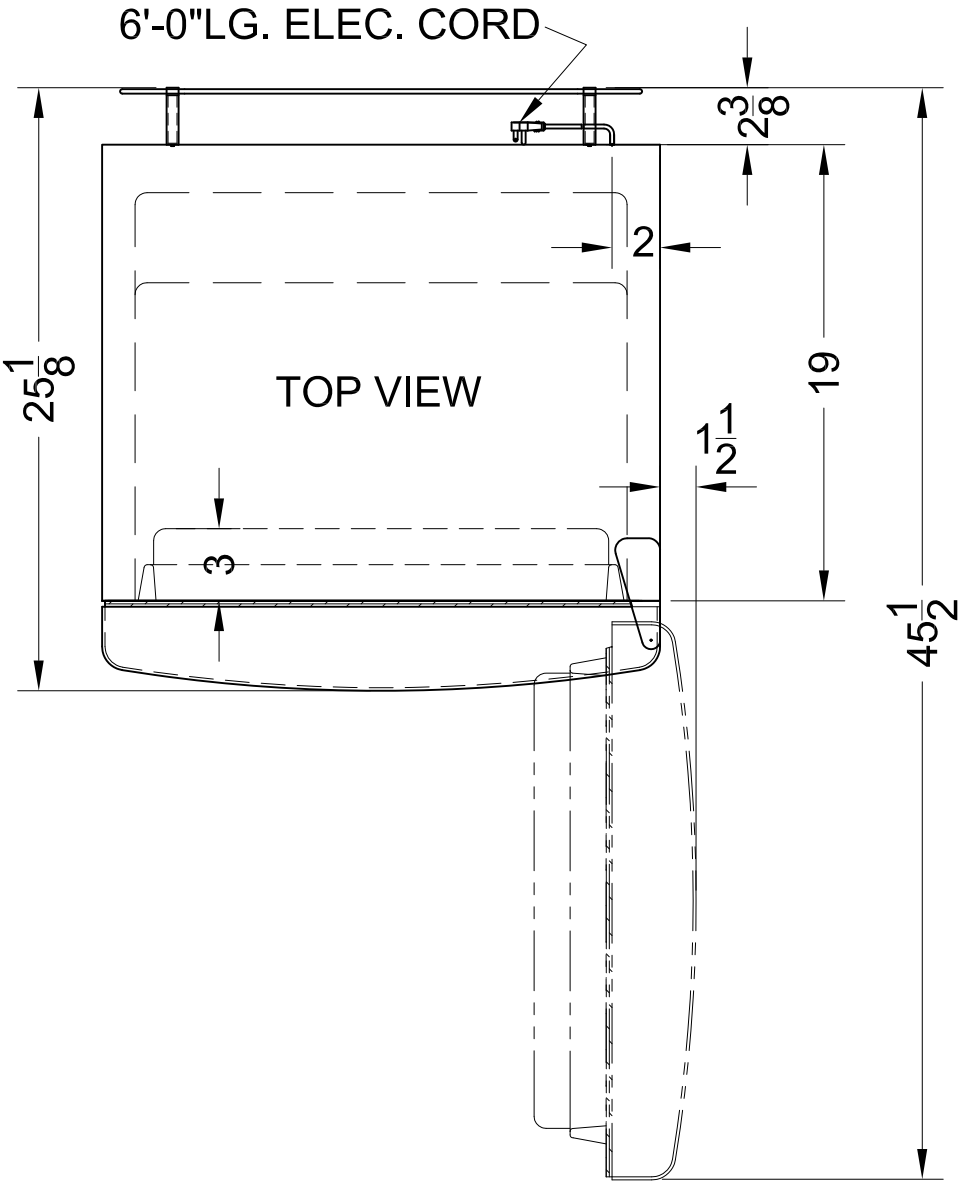
6'-0"LG. ELEC. CORD
TOP VIEW
2
3
$2\frac{3}{8}$
$25\frac{1}{8}$
19
$1\frac{1}{2}$
$45\frac{1}{2}$