Danze®

SPECIFICATIONS

2 PIECE HIGH EFFICIENCY TOILET

Model

DC023330 (2 Piece High Efficiency Toilet Bowl)
DC022321 (2 Piece High Efficiency Toilet Tank)

WaterSense Meets EPA Criteria
Certified by IAPMO R&T

Description

- 3" flush valve technology with Fluidmaster® pilot valve
- Elongated bowl with 12" rough-in
- 16 1/2" rim height
- Fully glazed concealed trapway
- Water consumption rating: 1.28 gpf (4.8 Lpf)
- Accessories included: soft-close seat, matching color ceramic floor bolt cover plates (for Model # DC023330) and side mounted tank lever in Brushed Nickel finish (for Model # DC022321)

Standards

UPC® MEET ASME A112.19.2 CSA®

Warranty

Five Year Limited Warranty (Vitreous China)

Technical Information

Fixture:	
Configuration	two-piece, elongated
Water per flush	1.28 gpf / 4.8 Lpf
Trapway	2 1/8" (5.4 cm)
Water depth from rim	5 3/8" (13.7 cm)
Water area	7 1/2" (19 cm) x 9 3/4" (24.6 cm)
Seat post hole centers	5 1/2" (14 cm)
Operating static pressure range	20 to 80 psi

Optional Accessories

Model	Description	Finish
D497441	Cirtangular® side mount tank lever	Chrome
D497441BN	Cirtangular® side mount tank lever	Brushed Nickel
D497441RB	Cirtangular® side mount tank lever	Oil Rub Bronze

IMPORTANT: Dimensions of fixtures are nominal and may vary within the range of tolerance established by ASME Standard A112.19.2. These measurements are subject to change or cancellation. No responsibility is assumed for use of superseded or voided pages.

Cirtangular® Collection
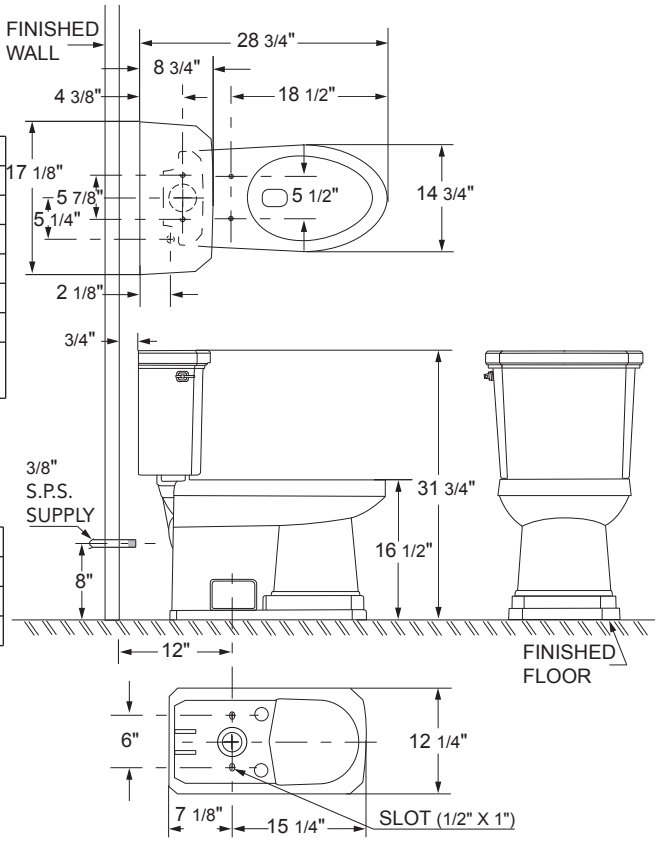
Available Colors
- White (WH)
- Biscuit (BC)