KOHLER®

Roughing-In

K-792-H2, K-792-N1
STEEPING™
BATH WHIRLPOOL

Product Information

Applicable products:	
Bath whirlpool	K-792-N1
Bath whirlpool with neckjets and pillow	K-792-H2

Fixture*:	
Basin area:	
Bathing well	43″ (109.2 cm) x 19″ (48.3 cm)
Top area	54″ (137.2 cm) x 30″ (61 cm)
Weight	420 lbs (190.5 kg)
To overflow:	
Water depth	15″ (38.1 cm)
Capacity	62 gal (234.7 L)
* Approximate measurements for comparison only.	

Product	kW	V	A*
Neckjets:	1.5	240	15
Without neckjets:	1.5	240	11
* Approximate measurements for comparison only.			

Drop-in cut-out	58-1/2″ (148.6 cm) x 34-1/2″ (87.6 cm)

Cut-out for undermount	K-584 template

Required accessories:	
Jet trim kit	K-9696
Grip rails (pair)	K-9623

Required Electrical Service

Dedicated circuit required, protected with Class A Ground-Fault Circuit-Interrupter (GFCI) or Residual Current Device (RCD):	
Pump/control	208-240 V, 20 A, 50/60 Hz

Installation Notes

Install this product according to the installation guide.

Floor support under whirlpool must provide for a minimum of 64 lbs/square foot (313 kg/square meter) loading.

Cast iron whirlpools are extremely heavy, making some drop-in installations difficult. Splitting the deck/surround is recommended if installing into a deck.

Fixture conforms to ASME Standard A112.19.1/CSA B45.2. All dimensions are nominal.

No change in measurements if connected with drain illustrated. (K-7161-AF or K-7161M-AF)
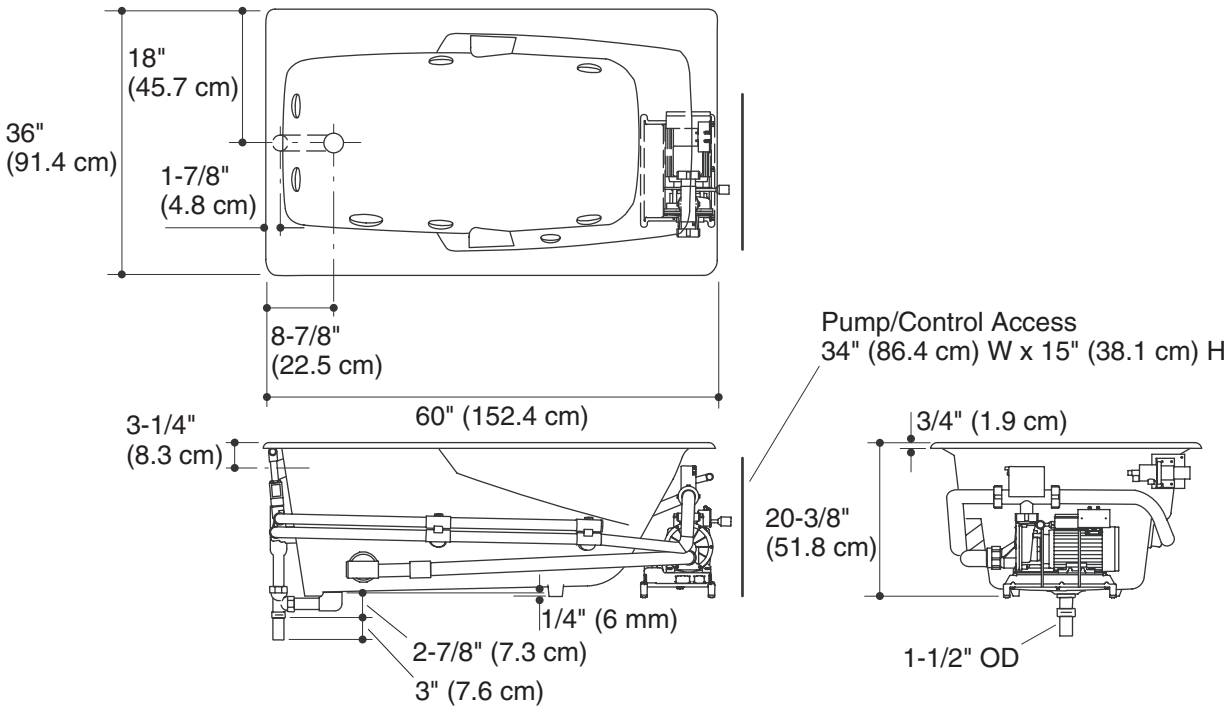
K-792-N1