Operator's manual

L221A

Please read the operator's manual carefully and make sure you understand the instructions before using the machine.



English

IMPORTANT! THIS CUTTING MACHINE IS CAPABLE OF AMPUTATING HANDS AND FEET AND THROWING OBJECTS. FAILURE TO OBSERVE THE FOLLOWING SAFETY INSTRUCTIONS COULD RESULT IN SERIOUS INJURY OR DEATH.

WARNING! Look for this symbol to point out important safety precautions. It means CAUTION!!! BE COME ALERT!!! YOUR SAFE TY IS IN VOLVED.

WARNING! In order to prevent accidental starting when setting up, transporting, adjusting or making repairs, always disconnect spark plug wire and place wire where it can not come in contact with plug.

CAUTION! Muffler and other engine parts become extremely hot during operation and remain hot after engine has stopped. To avoid severe burns on contact, stay away from these areas.



WARNING! Engine exhaust, some of its constituents, and certain vehicle components contain or emit chemicals known to the State of California to cause cancer and birth defects or other reproductive harm.

WARNING! Battery posts, terminals and related accessories contain lead and lead compounds, chemicals known to the State of California to cause cancer and birth defects or other reproductive harm. Wash hands after handling.

WARNING! This lawn mower is equipped with an internal combustion engine and should not be used on or near any unimproved forest-covered, brush-covered or grass-covered land unless the engine's exhaust system is equipped with a spark arrester meeting applicable local or state laws (if any). If a spark arrester is used, it should be maintained in effective working order by the operator.

In the state of California the above is required by law (Section 4442 of the California Public Resources Code). Other states may have similar laws. Federal laws apply on federal lands. A spark arrester for the muffler is available through your nearest authorized service center.

Children

WARNING! Children can be seriously injured or killed by this equipment. Carefully read and follow all of the safety instructions below.

CHILDREN CAN BE INJURED BY THIS EQUIPMENT. The American Academy of Pediatrics recommends that children be a minimum of 12 year of age before operating a pedestrian controlled lawn mower and a minimum of 16 years of age before operating a riding lawn mower.

Tragic accidents can occur if the op er a tor is not alert to the presence of children. Children are often attracted to the machine and the mowing activity. **Never** assume that children will remain where you last saw them.

- Keep children out of the mowing area and under the watchful care of a responsible adult *other than* the operator.
- Be alert and turn machine off if children enter the area.
- Before and while walking backwards, look behind and down for small children.
- Never allow children to operate the machine.
- Be particularly careful near corners, bushes, trees or other objects that block your view.

General operation

- Read, understand, and follow all instructions on the machine and in the manual(s) before starting. Be thoroughly familiar with the controls and the proper use of the machine before starting.
- Do not put hands or feet near or under rotating parts. Keep clear of the discharge opening at all times.
- Only allow responsible individuals, who are familiar with the instructions, to operate the machine.
- Clear the area of objects such as rocks, toys, wire, bones, sticks, etc., which could be picked up and thrown by blade. Stay behind the handle when the engine (motor) is running.
- Be sure the area is clear of other people before mowing. Stop machine if anyone enters the area.
- Do not operate machine bare footed or while wearing sandals. Al ways wear substantial footwear with good ankle support while mowing.
- Do not pull mower backwards unless absolutely necessary. Always look down and behind before and while moving backwards.
- Never direct discharged material toward anyone. Avoid discharging material against a wall or obstruction. Material may richochet back toward the operator. Stop blade when crossing gravel surfaces.

- Do not operate the mower without proper guards, plates, grass catcher or other safety protective devices in place.
- See manufacturer's instructions for proper operation and installation of accessories. Only use accessories approved by the manufacturer.
- Stop blade when crossing gravel surfaces.
- Never leave a running machine unattended.
- Stop the engine (motor) and wait until the blade comes to a complete stop before cleaning the machine, removing the grass catcher, or unclogging the discharge chute.
- Mow only in daylight or good artificial light.
- Do not operate the machine while under the influence of alcohol or drugs.
- Never operate machine in wet grass. Always be sure of your footing: keep a firm hold on the handle, walk, never run.
- Disengage drive system, if so equipped, before starting the engine (motor).
- If the equipment should start to vibrate abnormally, stop the engine (motor) and check immediately for the cause. Vibration is generally a warning of trouble.
- Always wear eye protection when operating machine.
- Use extra care when approaching blind corners, shrubs, trees, or other objects that may obscure vision.
- When loading or unloading this machine, do not exceed the maximum recommended operation angle of 15°.
- Wear proper Personal Protective Equipment (PPE) while operating this machine, including (at a minimum) sturdy footwear, eye protection, and hearing protection. Do not mow in shorts or open toed footwear.

Always let someone know you are outside mowing.

Slope operation

Slopes are a major factor related to slip & fall accidents, which can result in severe injury. All slopes require extra caution. If you feel uneasy on a slope, do not mow it.

Do:

- Mow across the face of slopes, never up and down.
- Remove obstacles such as rocks, tree limbs, etc.
- Watch for holes, ruts, bumps or hidden objects. Uneven terrain could cause a slip and fall accident. Tall grass can hide obstacles.

Do not:

- Do not mow near drop-offs, ditches or embankments. You could lose your footing or balance.
- Do not mow on wet grass or excessively steep slopes. Poor footing could cause a slip and fall accident.

Safe handling of gasoline

To avoid personal injury or property damage, use extreme care in handling gasoline. Gasoline is extremely flammable and the vapors are explosive.

- Extinguish all cigarettes, cigars, pipes and other sources of ignition.
- Use only an approved container.
- Never remove gas cap or add fuel with the engine running.
- Allow the engine to cool before refueling.
- Never refuel the machine indoors.
- Never store the machine or fuel container where there is an open flame, spark or pilot light such as a water heater or on other appliances.
- Never fill containers inside a vehicle, on a truck or trailer bed with a plastic liner. Always place containers on the ground away from your vehicle before filling.
- Remove gas-powered equipment from the truck or trailer and refuel it on the ground. If this is not possible, then refuel such equipment with a portable container, rather than from a gasoline dispenser nozzle.
- Keep the nozzle in contact with the rim of the fuel tank or container opening at all times until fuelling is complete. Do not use a nozzle lock-open device.
- If fuel is spilled on clothing, change clothing immediately.
- Never overfill the fuel tank.
- Replace gas cap and tighten securely.

General service

- Never run a machine inside a closed area.
- Never make adjustments or repairs with the engine (motor) running. Disconnect the spark plug wire, and keep the wire away from the plug to prevent accidental starting.
- Keep all nuts and bolts tight to be sure the equipment is in safe working condition.
- Never tamper with safety devices. Check their proper operation regularly. Never do anything to interfere with the intended function of a safety device or reduce the protection provided by a safety device.
- Keep machine free of grass, leaves, or other debris build-up. Clean oil or fuel spillage. Allow machine to cool before storing.
- Stop and inspect the equipment if you strike an object. Repair, if necessary, before restarting.
- Never attempt to make wheel height adjustments while the engine is running.
- Grass catcher components are subject to wear, damage, and de te ri o ra tion, which could expose moving parts or allow objects to be thrown. Frequently check components and replace with manufacturer's recommended parts, when necessary.
- Mower blades are sharp and can cut. Wrap the blade(s) or wear gloves, and use extra caution when servicing them.
- Do not change the engine governor setting or overspeed the engine.
- Maintain or replace safety and instruction labels, as necessary.

KEY TO SYMBOLS

Key to symbols

WARNING! The machine can be a dangerous tool if used incorrectly or carelessly, which can cause serious or fatal injury to the operator or others.



Please read the operator's manual carefully and make sure you understand the instructions before using the machine.



Stop the engine

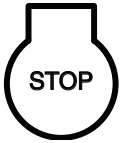

Start the engine



Fast



Slow



Fuel



Oil



Choke



DANGER, Keep hands and feet away



Explanation of warning levels

The warnings are graded in three levels.

WARNING!



WARNING! Used if there is a risk of serious injury or death for the operator or damage to the surroundings if the instructions in the manual are not followed.

IMPORTANT!



IMPORTANT! Used if there is a risk of injury to the operator or damage to the surroundings if the instructions in the manual are not followed.

CAUTION!

CAUTION! Used if there is a risk of damage to materials or the machine if the instructions in the manual are not followed.

Contents

SAFETY RULES
Children 2
General operation 2
Slope operation 3
Safe handling of gasoline 3
General service 3
KEY TO SYMBOLS
Key to symbols 4
Explanation of warning levels 4
CONTENTS
Contents 5
PRESENTATION
Dear customer! 6
Customer responsibilities 6
The Lawn mower 6
Steps before using a new lawn mower 7
WHAT IS WHAT?
What is what on the lawn mower? 8
MACHINE´S SAFETY EQUIPMENT
General 9
ASSEMBLING AND ADJUSTMENTS
General 10
Remove the lawn mower from the carton. 10
Handle 10
Grass catcher 11
Starter handle 11
Convert the lawn mower 11
Cutting height 12
Filling with oil 12
FUEL HANDLING
General 13
Fueling 13
Transport and storage 13
OPERATING
Personal protective equipment 14
General safety precautions 14
Basic working techniques 16
Transport and storage 16
Starting and stopping 17
MAINTENANCE
General 18
Maintenance schedule 18
General recommendations 19
General inspection 19
General lubrication 19
Cleaning 19
Engine 20
Muffler 21
Spark plug 21
Air filter 21
Blade 22
Drive belt 24
TROUBLESHOOTING
Troubleshooting schedule 26

PRESENTATION

Dear customer!

Congratulations on your choice to buy a Husqvarna product! Husqvarna is based on a tradition that dates back to 1689, when the Swedish King Karl XI ordered the construction of a factory on the banks of the Huskvarna River, for production of muskets. The location was logical, since water power was harnessed from the Huskvarna River to create the water-powered plant. During over 300 years of continuous operation, the Husqvarna factory has produced a lot of different products, from wood stoves to modern kitchen appliances, sewing machines, bicycles, motorcycles etc. In 1956, the first motor driven lawn mowers appeared, followed by chain saws in 1959, and it is within this area Husqvarna is working today.

Today Husqvarna is one of the leading manufacturers in the world of forest and garden products, with quality as our highest priority. We develop, manufacture and market high quality motor driven products for forestry and gardening as well as for building and construction industry.

Your purchase gives you access to professional help with repairs and service whenever this may be necessary. If the retailer who sells your machine is not one of our authorized dealers, ask for the address of your nearest servicing dealer.

It is our wish that you will be satisfied with your product and that it will be your companion for a long time. Think of this operator's manual as a valuable document. By following its' content (using, service, maintenance etc) the life span and the second-hand value of the machine can be extended. If you ever lend or sell this machine, make sure that the borrower or buyer gets the operator's manual, so they will also know how to properly maintain and use it.

Thank you for using a Husqvarna product.

Husqvarna AB has a policy of continuous product development and therefore reserves the right to modify the design and appearance of products without prior notice.

For customer assistance, contact us at our website: www.husqvarna.com

Customer responsibilities

- Read and observe the safety rules.
- Follow the maintenance schedule in this manual. Any maintenance other than that described in this manual must be carried out by your servicing dealer (retailer).

The Lawn mower

Serial number:	
Date of purchase:	
The model and serial numbers will be found on a decal attached to the rear of the lawn mower housing. You should record both serial number and date of purchase and keep in a safe place for future reference.	

Product specifications

Gasoline Capacity and Type	1.09 Quarts / 1.03 Liters (Unleaded Regular Only)
Oil Type (API SG-SL)	SAE 30 (above 0°C / 32°F) SAE 5W-30 (below 0° / 32°F)
Oil Capacity	15 Ounces
Spark Plug (Gap: 0.020” / 0.5mm)	AUTOLITE 5924
Blade Bolt Torque	35-40 ft. lbs. (47-54 Nm)

Steps before using a new lawn mower

- Please read the operator's manual carefully.
- Check that the cutting equipment is correctly fitted and adjusted. See instructions under the heading Assembly.
- Fill with fuel and oil in the engine. A container with sufficient oil quantity is supplied with the machine. See the instructions under the heading fuel handling.



WARNING! Under no circumstances may the design of the machine be modified without the permission of the manufacturer. Always use genuine accessories. Non-authorized modifications and/or accessories can result in serious personal injury or the death of the operator or others.



WARNING! A lawn mower is a dangerous tool if used carelessly or incorrectly and can cause serious, even fatal injuries. It is extremely important that you read and understand the contents of this operator's manual.



WARNING! Long-term inhalation of the engine's exhaust fumes can represent a health hazard.



WARNING! In order to prevent accidental starting when setting up, transporting, adjusting or making repairs, always disconnect spark plug wire and place wire where it can not come in contact with plug.



WARNING! The muffler gets very hot in use and remains so for a short time afterwards. Do not touch the muffler if it is hot!



WARNING! Engine exhaust, some of its constituents, and certain vehicle components contain or emit chemicals known to the State of California to cause cancer and birth defects or other reproductive harm.



WARNING! Battery posts, terminals and related accessories contain lead and lead compounds, chemicals known to the State of California to cause cancer and birth defects or other reproductive harm. Wash hands after handling.



WARNING! This lawn mower is equipped with an internal combustion engine and should not be used on or near any unimproved forest-covered, brush-covered or grass-covered land unless the engine's exhaust system is equipped with a spark arrester meeting applicable local or state laws (if any). If a spark arrester is used, it should be maintained in effective working order by the operator.

In the state of California the above is required by law (Section 4442 of the California Public Resources Code). Other states may have similar laws. Federal laws apply on federal lands. A spark arrester for the muffler is available through your nearest authorized service center.

Husqvarna AB has a policy of continuous product development and therefore reserves the right to modify the design and appearance of products without prior notice.

WHAT IS WHAT?

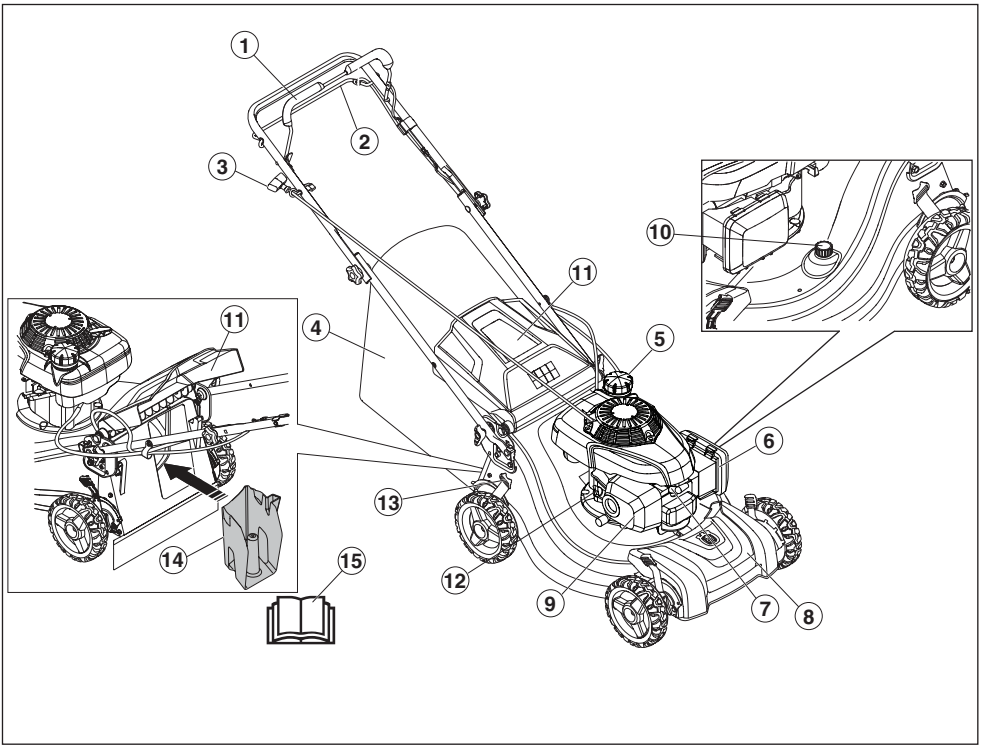

What is what on the lawn mower?

1 Engine brake handle
2 Drive bail
3 Starter handle
4 Grass catcher
5 Fuel cap
6 Air filter
7 Spark plug
8 Drive cover
9 Muffler
10 Wash-out port
11 Rear deflector
12 Engine oil cap with dipstick
13 Cutting height control
14 Mulch plug
15 Operator's manual

MACHINE´S SAFETY EQUIPMENT

General

This section describes the machine's safety equipment, its purpose, and how checks and maintenance should be carried out to ensure that it operates correctly.

WARNING! Never use a machine that has faulty safety equipment! If your machine fails any checks contact your service agent to get it repaired.

Prevent unintentional starting by removing the ignition cable from the spark plug.

Engine brake handle

IMPORTANT! Federal regulations require an engine control to be installed on this lawn mower in order to minimize the risk of blade contact injury. Do not under any circumstances attempt to defeat the function of the operator control. The blade turns when the engine is running.

The engine brake is designed to stop the engine. When the grip on the engine brake handle is released the engine should stop.

Checking the engine brake handle

- Start the engine and then release the brake handle. The engine should stop and the drive should disengage.

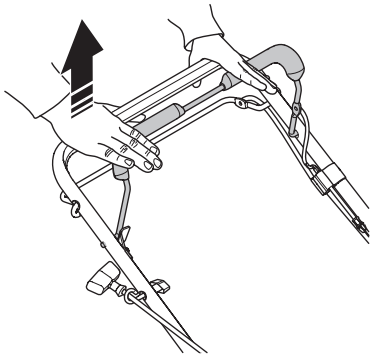

Rear deflector

The rear deflector, attached between the rear wheels of your mower, is provided to minimize the possibility that objects will be thrown out of the rear of the mower into the operator's mowing position.

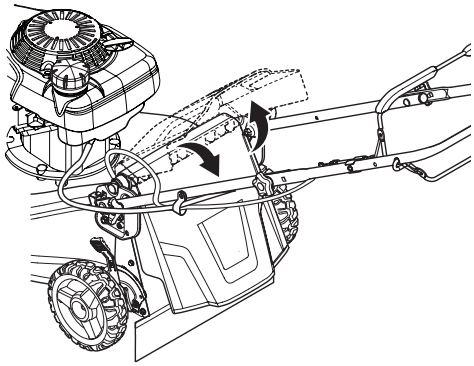

Inspecting the rear deflector

- Make sure the rear deflector is not damaged and that there are no visible defects such as cracks, or broken springs that force the door closed. Replace the deflector or springs if damaged.

Muffler

WARNING! Never use a machine without a muffler, or with a faulty muffler. A damaged muffler may substantially increase the noise level and the fire hazard. Keep fire fighting equipment handy.

The muffler gets very hot during and after use. This also applies during idling. Be aware of the fire hazard, especially when working near flammable substances and/or vapours.

The muffler is designed to keep noise levels to a minimum and to direct exhaust fumes away from the user.

Inspecting the muffler

- Check regularly that the muffler is complete and secured correctly.

ASSEMBLING AND ADJUSTMENTS

General

WARNING! Prevent unintentional starting by removing the ignition cable from the spark plug.

CAUTION! This lawn mower is shipped without oil or gasoline in the engine.

Remove the lawn mower from the carton.

- Remove loose parts included with mower.
- Cut down two end corners of carton and lay end panel down flat.
- Remove all packing materials, except padding between upper and lower handle and padding holding the engine brake handle to upper handle.
- Roll the lawn mower out of the carton and make sure that no loose parts are left within the carton.

Handle

CAUTION! Take care not to damage the cables and wires when you unfold the handlebar.

Operating position

1 Raise the lower handle section to operating position. Align the handle bar pins with a slot in the handle bracket to set a comfortable height position for the handle.

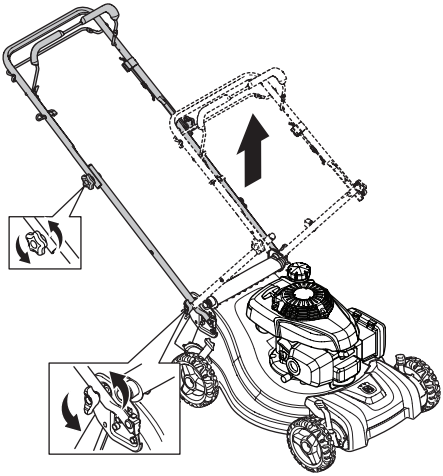

2 Tighten the lower handlebar knobs.

3 Remove protective padding, raise the upper handle section into place on the lower handle and tighten both upper knobs.

4 Remove any packing material from around engine brake handle.

Vertical handle storage

The handle can be set in a vertical storage position.

1 Loosen the lower handle knobs.

2 Rotate the handle and align the handle bar pins with the vertical slots on the handle bracket.

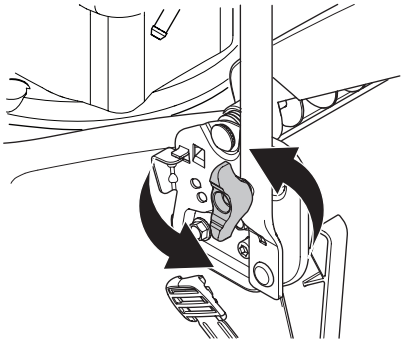

3 Retighten the knobs.

Storage/Transport position

The handle assembly can be folded to minimize space needed for transport and storage.

CAUTION! Take care not to damage the cables and wires when you fold the handlebar.

1 Loosen the 2 handle knobs on the upper handle and allow handle to fold down to the rear.

2 Loosen the 2 handle knobs on the lower handle and pivot entire handle assembly forward and allow it to rest on mower.

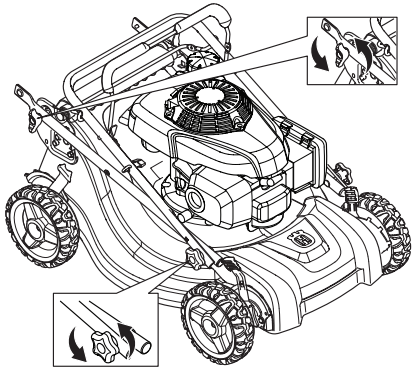

Grass catcher

Assembly of the catcher

1 Put the grass catcher frame into the grass bag with the rigid part of the bag on the bottom. Make sure the handle of the frame is outside of the top of the bag.

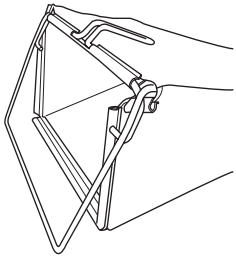

2 Secure the grass bag to the frame by using the quick-action clips.

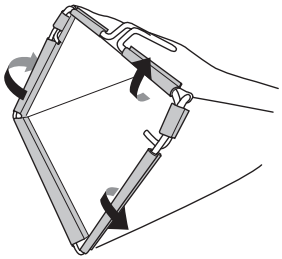

Starter handle

Install starter handle

1 Loosen the T-knob.

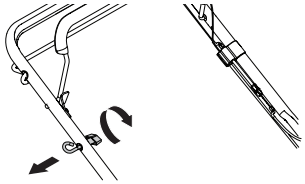

2 Hold the engine brake handle against the upper handle.

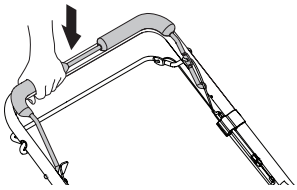

3 Grip the starter handle, slowly pull the engine starter handle until the starter rope can slip into the loop of the rope guide.

4 Tighten the T-knob.

Convert the lawn mower

Your lawn mower was shipped ready to be used in mulching mode.

The mulching mode will recut the grass clippings many times, which will reduce the clippings in size so that as they fall onto the lawn they will disperse into the grass and not be noticed. In addition, the mulched grass will biodegrade quickly to provide nutrients for the lawn.

Use rear bagging to collect the grass clippings within the grass catcher.

WARNING! Do not run your lawn mower without rear door closed or approved grass catcher in place. Never attempt to operate the lawn mower with the rear door removed or propped open.

Rear bagging

1 Lift the back shield and remove the mulch plug.

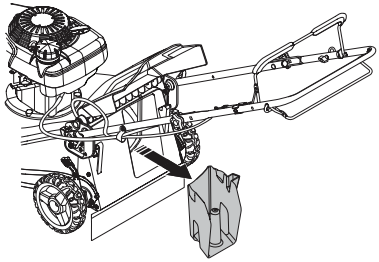

2 Lift the back shield and place the grass catcher frame hooks onto the grass bag brackets.

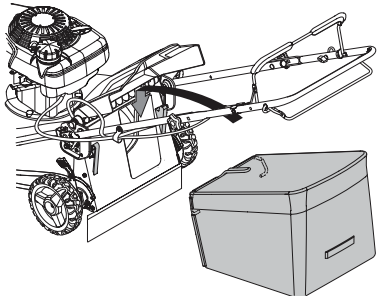

3 Release the back shield and allow it to rest on top of the grass bag frame.

Mulching

1 Lift the back shield and remove the grass bag (if equipped).

2 Insert the mulch plug into the collector channel.

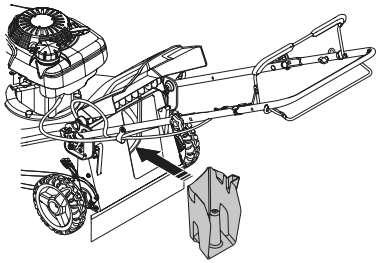

3 Allow the back shield to close and ensure the back shield is firmly shut against the mulch plug.

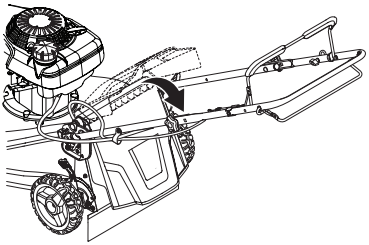

Rear-side discharging

1 Lift the back shield and remove the mulch plug or grass bag (if equipped).

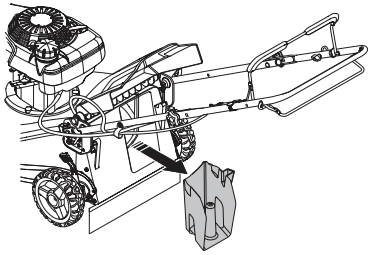

2 Close the back shield to allow the machine to discharge material to the left of the machine while cutting.

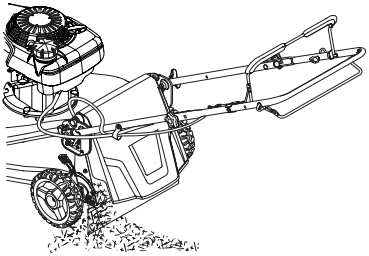

Cutting height

The cutting height can be adjusted to 9 (1-9) different positions.

Raise wheels for low cut and lower wheels for high cut. Adjust cutting height to suit your requirements. Medium position is best for most lawns.

- To change cutting height, squeeze height adjuster lever toward the wheel. Move the wheel up or down to suit your requirements. Set the same height at all four corners.

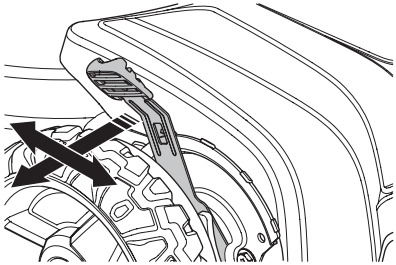

- The adjuster lever is spring loaded.

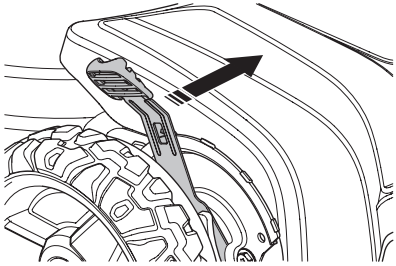

Filling with oil

- The oil tank is empty at delivery. Fill the oil slowly with the included oil. See instructions under the heading Maintenance.

FUEL HANDLING

General



WARNING! Running an engine in a confined or badly ventilated area can result in death due to asphyxiation or carbon monoxide poisoning.

Fuel and fuel fumes are highly inflammable and can cause serious injury when inhaled or allowed to come in contact with the skin. For this reason observe caution when handling fuel and make sure there is adequate ventilation.

The exhaust fumes from the engine are hot and may contain sparks which can start a fire. Never start the machine indoors or near combustible material!

Do not smoke and do not place any hot objects in the vicinity of fuel.

Fueling

- Use fresh, clean, regular unleaded gasoline with a minimum of 87 octane. Do not mix oil with gasoline. Purchase fuel in quantities that can be used within 30 days to assure fuel freshness



WARNING! Always stop the engine and let it cool for a few minutes before refueling. The engine should be switched off.

Use a fuel can at all times to avoid spillage.

Fill fuel tank to bottom of tank filler neck. Do not overfill. Use fresh, clean, regular unleaded gasoline with a minimum of 87 octane. Do not mix oil with gasoline. Purchase fuel in quantities that can be used within 30 days to assure fuel freshness.

When refuelling, open the fuel cap slowly so that any excess pressure is released gently.

Clean the area around the fuel cap.

Tighten the fuel cap carefully after refueling. Negligence may lead to the start of a fire.

Never start the machine:

- If you have spilled fuel or engine oil on the machine, wipe off the spillage and allow remaining fuel to evaporate.
- If you have spilled fuel on yourself or your clothes, change your clothes. Wash any part of your body that has come in contact with fuel. Use soap and water.
- If the machine is leaking fuel. Check regularly for leaks from the fuel cap and fuel lines.

Engine oil

CAUTION! Check the oil level before starting the lawn mower. A too low oil level can cause serious damage to the engine.

- See instructions in the section “Maintenance”.
- The engine oil should be changed the first time after 5 hours running time. Never use oil intended for two-stroke engines.

Transport and storage

- Store and transport the machine and fuel so that there is no risk of any leakage or fumes coming into contact with sparks or open flames, for example, from electrical machinery, electric motors, electrical relays/ switches or boilers.
- When storing and transporting fuel always use approved containers intended for this purpose.

Long-term storage

- When storing the machine for long periods the fuel tank must be emptied. Contact your local gas station to find out where to dispose of excess fuel.
- Fuel stabilizer is an acceptable alternative to avoid tacky deposits during storage. Add stabilizer to the fuel in the tank or the storage container. Always follow the mix ratio found on stabilizer container. Run the engine for at least 10 minutes after adding the stabilizer so that it will reach the carburetor. Do not empty the gas tank and carburetor if using fuel stabilizer.

CAUTION! Alcohol blended fuels (called gasohol or using ethanol or methanol) can attract moisture which leads to separation and formation of acids during storage.

Acidic gas can damage the fuel system of an engine while in storage. To avoid engine problems, the fuel system should be emptied before stor age of 30 days or longer. Empty the gas tank, start the engine and let it run until the fuel lines and carburetor are empty. Use fresh fuel next season. Never use engine or carburetor cleaner products in the fuel tank or permanent damage may occur.

Personal protective equipment

You must use approved personal protective equipment whenever you use the machine. Personal protective equipment cannot eliminate the risk of injury but it will reduce the degree of injury if an accident does happen. Ask your dealer for help in choosing the right equipment.

Always wear:

- Sturdy, non-slip boots or shoes.
- Heavy, long pants. Do not wear shorts sandals or go barefoot.
- Gloves must be worn when required, for example when fitting, inspecting or cleaning the blade.
- Wear ear protectors to avoid damage to hearing. Exposure to noise can cause hearing loss.
- Always wear safety glasses or eye shields while operating your lawn mower or performing any adjustments or repairs. We recommend standard safety glasses or a wide vision safety mask over spectacles.

General safety precautions

This section describes basic safety directions for using the machine. This information is never a substitute for professional skills and experience.

- Please read the operator's manual carefully and make sure you understand the instructions before using the machine.
- Keep in mind that the operator is responsible for accidents or hazards occuring to other people or their property.
- See manufacturer's instructions for proper operation and installation of accessories. Only use accessories approved by the manufacturer.
- The machine must be kept clean. Signs and stickers must be fully legible.
- Maintain or replace safety and instruction labels, as necessary.
- Always disconnect the spark plug before performing maintenance or service.

Children



WARNING! Children can be seriously injured or killed by this equipment. Carefully read and follow all of the safety instructions below.

CHILDREN CAN BE INJURED BY THIS EQUIPMENT. The American Academy of Pediatrics recommends that children be a minimum of 12 year of age before operating a pedestrian controlled lawn mower and a minimum of 16 years of age before operating a riding lawn mower. Serious accidents may occur if you fail to be on your guard for children in the vicinity of the machine. Children are often attracted to the machine and mowing. Never assume that children will remain where you last saw them.

- Keep an eye out and shut off the machine if children enter the work area.
- Never use the machine if persons, especially children or pets, are in the immediate vicinity.
- Before and during reversing procedures, look behind you and down for small children.

Always use common sense

It is not possible to cover every conceivable situation you can face. Always exercise care and use your common sense. If you get into a situation where you feel unsafe, stop and seek expert advice. Contact your dealer, service agent or an experienced user. Do not attempt any task that you feel unsure of!



WARNING! This machine produces an electromagnetic field during operation. This field may under some circumstances interfere with active or passive medical implants. To reduce the risk of serious or fatal injury, we recommend persons with medical implants consult their physician and the medical implant manufacturer before operating this machine.



WARNING! The machine can be a dangerous tool if used incorrectly or carelessly, which can cause serious or fatal injury to the operator or others.

Never allow children or other persons not trained in the use of the machine to use or service it.

The machine should not be used by people with reduced physical or mental capacities or people who are unsuitable for health reasons to operate the machine, without supervision of a person responsible for their safety.

Never allow anyone else to use the machine without first ensuring that they have read and understood the contents of the operator's manual.

Never use the machine if you are fatigued, while under the influence of alcohol or drugs, medication or anything that could affect your vision, alertness, coordination or judgement.



WARNING! Unauthorized modifications and/or accessories may lead to serious injury or death to the user or others. Under no circumstances may the design of the machine be modified without the permission of the manufacturer.

Do not modify this product or use it if it appears to have been modified by others.

Never use a machine that is faulty. Carry out the safety checks, maintenance and service instructions described in this manual. Some maintenance and service measures must be carried out by trained and qualified specialists. See instructions under the heading Maintenance.

Always use genuine accessories.

Work area safety

- Branches, twigs, stones, etc. should be removed from the lawn before you start to mow.
- Objects hitting against the cutting attachment could be thrown and cause damage to people and objects. Keep people and animals well away.
- Never use the machine in bad weather, for instance in fog, in rain, damp or in wet locations, strong winds, intense cold, risk of lightning, etc. Working in bad weather is tiring and can lead to dangerous conditions, e.g. slippery surfaces.
- Do not mow wet grass. It is slippery, and tires can lose their grip so that the machine skids.
- Observe your surroundings to ensure that nothing can affect your control of the machine.
- Beware of roots, stones, twigs, pits, ditches etc. Tall grass can hide obstacles.
- Mowing slopes can be dangerous. Do not use the lawn mower on very steep slopes. The lawn mower should not be used on inclines greater than 15 degrees.
- On sloping ground you should work along the slope. It is much easier to work along a slope than it is to work up and down it.
- Be careful when you are approaching hidden corners and objects that could block your view.

Work safety

- A lawn mower is only designed to mow lawns. All other use is forbidden.
- Always let someone know you are outside mowing.
- Do not operate the mower without proper guards, plates, grass catcher or other safety protective devices in place.
- Wear personal protective equipment. See instructions under the heading "Personal protective equipment".
- Do not start a lawn mower unless the cutter and all covers are fitted correctly. Otherwise the cutter could come loose and cause personal injuries.
- Make sure the cutter does not hit foreign objects such as stones, roots or the like. This can make the cutter dull and bend the engine shaft. A bent blade or engine shaft can result in an imbalance and heavy vibration, which results in a great risk of the blade becoming loose.
- The brake handle must never be permanently anchored to the handle when the machine is running.
- Place the lawn mower on firm, flat surface and start it. Make sure that the cutter cannot come into contact with the ground or other objects.
- Always place yourself behind the machine. Allow all the wheels to remain on the ground and keep both hands on the handle when mowing. Keep your hands and feet away from the rotating blades.
- Do not tilt the machine when the engine is running.

- Pay particular attention when pulling the machine towards you during work.
- Never lift up the lawn mower or carry it around when the engine is running. If you must lift the lawn mower, first switch off the engine and disconnect the ignition lead from the spark plug.
- Do not mow the lawn while walking backwards.
- The engine should be switched off when moving over ground that is not to be mowed. For example, gravel paths, stone, shingle, asphalt, etc.
- Never run with the machine when it is running. You should always walk with the lawn mower.
- Shut down the engine before changing the cutting height. Never make adjustments with the engine running.
- Never leave the machine unsupervised with the motor running. Turn off the motor. Ensure the cutting attachment has stopped rotating.
- If any foreign object is hit or if vibrations occur stop the machine immediately. Disconnect the spark plug wire from the spark plug. Check that the machine is not damaged. Repair any damage.
- Never direct discharged material toward anyone. Avoid discharging material against a wall or obstruction. Material may richochet back toward the operator.

Basic working techniques

- Always cut with a sharp blade for optimal results. A dull blade gives an uneven cut and the grass becomes yellow on the surface of the cut.
- Never mow more than 1/3 of the length of the grass. This especially applies during dry periods. Mow first with the cutting height set high. Then check the result and lower to an appropriate height. If the grass is really long, drive slowly and mow twice if necessary.

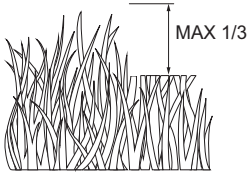

- For extremely heavy cutting, reduce the width of cut by overlapping previously cut path and mow slowly.
- Cut in different directions each time in order to avoid stripes in the lawn.
- Before pulling the machine towards you, disengage the drive and push the machine forward approx. 3” (10 cm).
- Make sure to disengage the drive when approaching an obstacle.

Pores in cloth grass catchers can become filled with dirt and dust with use and the catcher will collect less grass. To prevent this, regularly hose the grass catcher off with water and let dry before using.

Slope operation

Mowing slopes can be dangerous. Do not use the lawn mower on slopes steeper than 15°. All slopes demand extra care. If you feel unsure, do not mow it.

Do:

- Mow across the face of slopes, never up and down.
- Exercise extreme caution when changing direction on slopes.
- Remove obstacles such as stones, branches, etc.
- Watch for holes, ruts, bumps or hidden objects. Uneven terrain could cause a slip and fall accident. Tall grass can hide obstacles.

Do not:

- Do not mow too close to edges, ditches or banks.
- Avoid sudden changes in direction.
- Do not mow wet grass. It is slippery, and tires can lose their grip so that the machine skids.

Transport and storage

- Secure the equipment during transportation in order to avoid transport damage and accidents.
- Store the equipment in a lockable area so that it is out of reach of children and unauthorized persons.
- Store the machine and its equipment in a dry and frost proof place.
- When loading or unloading this machine, do not exceed the maximum recommended operation angle of 15°.
- Empty the fuel tank by running the machine until the tank is empty.
- Drain the engine oil as described under Changing the engine oil.
- Clean the machine. For more information, see the ”Cleaning” section.
- Lubricate as shown in the Maintenance section of this manual.
- Tighten bolts and nuts.
- Replace or repair damaged components.
- Touch up all rusted or chipped paint surfaces, sand lightly before painting.
- Place the lawn mower in Transport position. See ”Storage/Transport position” in the Assembly and adjustments section of this manual.
- Cover your unit with a suitable protective cover that does not retain moisture. Do not use plastic. Plastic cannot breathe, which allows condensation to form and will cause your unit to rust. **Never cover mower while engine and exhaust areas are still warm!**
- For transport and storage of fuel, see the section “Fuel handling”.

Starting and stopping

Before starting

WARNING! Please read the operator's manual carefully and make sure you understand the instructions before using the machine.

Wear personal protective equipment. See instructions under the heading "Personal protective equipment".

- Keep people and animals well away from the working area.
- Perform daily maintenance. See instructions in the section "Maintenance".
- Ensure the ignition lead sits correctly on the spark plug.
- Add oil if necessary. See instructions under the heading Maintenance.
- Add gasoline. See instructions in the section "Fuel handling".
- Disengage drive system, if so equipped, before starting the engine (motor).

Manual Start

The engine brake handle must be held against the handlebar when the engine is started.

- Position yourself behind the machine.
- Grip the starter handle and pull quickly. Do not allow the starter rope to snap back. **Never wrap the starter cord around your hand**

Drive

- Self-propelling is controlled by hold in the brake handle down to the handle and pulling the drive bail upwards toward the handle. The further toward the handle the drive bail is pulled, the faster the unit will travel.

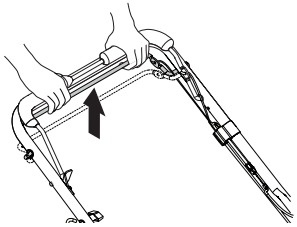

- Forward motion will stop when either the the brake handle or the drive bail is released.
- To stop forward motion without stopping the engine, release the drive bail only. Hold the the brake handle down against handle to continue mowing without self-propelling.

Stopping

- Stop the engine by releasing the engine brake handle. The drive is also disengaged when you release the engine brake handle.

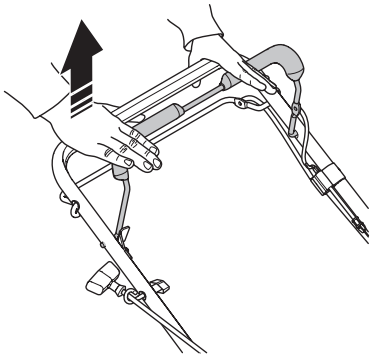

Emptying the grass catcher

- Lift up on grass catcher using the frame handle.

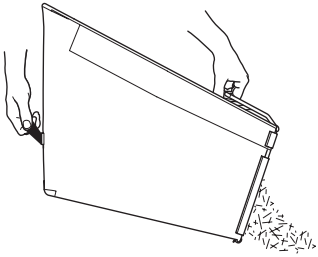

- Remove grass catcher with clippings from under lawn mower handle.
- Empty clippings from bag using both frame handle and bag handle.

CAUTION! Do not drag the bag when emptying, it will cause unnecessary wear.

MAINTENANCE

General

WARNING! The user must only carry out the maintenance and service work described in this manual. More extensive work must be carried out by an authorized service workshop.

Switch off the engine before carrying out any checks or maintenance. Stop the engine (motor) and wait until the blade comes to a complete stop before cleaning the machine, removing the grass catcher, or unclogging the discharge chute. Prevent unintentional starting by removing the ignition cable from the spark plug. The starter key or battery must also be removed on machines with electric start.

The life span of the machine can be reduced and the risk of accidents can increase if machine maintenance is not carried out correctly and if service and/or repairs are not carried out professionally. If you need further information please contact your nearest servicing dealer.

- Let your Husqvarna dealer regularly check the machine and make essential adjustments and repairs.
- Replace any damaged, worn or broken parts.
- Always use genuine accessories.

Maintenance schedule

In the maintenance schedule you can see which parts of your machine that require maintenance, and with which intervals it should take place. The intervals are calculated based on average use of the machine, and may differ depending on the rate of your personal use.

Daily Maintenance	Before use	After each use	Every 10 hours	Every 25 hours	Every 100 hours	Before storage
Lawn mower						
Tighten bolts and nuts.	X					X
Clean / Inspect Grass Catcher *	X	X				X
Check tires	X					
Check drivewheels***	X					
Clean the machine****		X				X
Clean under the drive cover***			X			
Check the drive belt / Pulleys***				X		
Check that the cutter is undamaged and not cracked. Replace the cutter if necessary.				X[3]		
General lubrication				X		
Clean and Recharge Battery **				X		X[4]
Engine						
Check the engine's oil level	X[5]					
Change engine oil				X[1,2]		
Clean the air filter. Replace if necessary.				X[2]		
Check that the muffler is securely attached and not damaged.				X		
Replace the spark plug.					X	
Empty fuel tank or add Stabilizer						X

* If so equipped

** Machines equipped with electric start

***Power-Propelled machines

****Use a scraper to clean under deck

Note 1: When operating with a heavy load or at high ambient temperatures, or other extreme conditions, service the machine more often. Note 2: Clean more often if conditions are exceptionally dusty. Note 3: Replace blades more often when mowing in sandy soil. Note 4: Charge the battery for max. 48 hours. Note 5: And after 5 hours of use.

General recommendations

The warranty on this lawn mower does not cover items that have been subjected to operator abuse or negligence. To receive full value from the warranty, operator must maintain mower as instructed in this manual. Some adjustments will need to be made periodically to properly maintain your unit. At least once a season, check to see if you should make any of the adjustments described in the Maintenance section of this manual.

- At least once a year, replace the spark plug, clean or replace air filter element and check blade for wear. A new spark plug and clean/new air filter element assure proper air-fuel mixture and help your engine run better and last longer.
- Follow the maintenance schedule in this manual.

General inspection

- Check that nuts and screws are tight.

General lubrication

CAUTION! Do not oil or grease plastic wheel bearings. Viscous lubricants will attract dust and dirt that will shorten the life of the selflubricating bearings. If you feel they must be lubricated, use only a dry powdered graphite type lubricant sparingly.

Keep unit well lubricated.

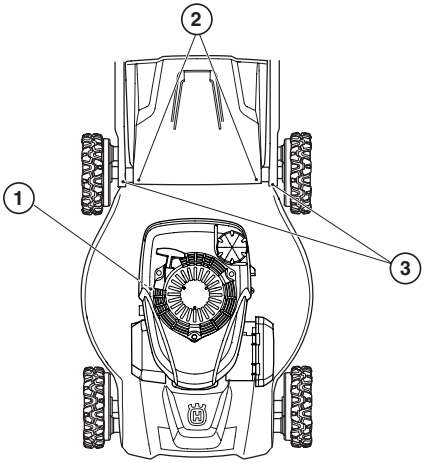

1	Engine oil	See ”Engine” in section Maintenance
2	Rear door hinge	Spray lubricant
3	Handle bar mounting bolts	

Cleaning

WARNING! Always disconnect the spark plug before performing maintenance or service.

- Brush leaves, grass and the like off of the lawn mower.
- Keep finished surfaces / wheels free of gasoline, oil, etc.
- Keep top of engine around starter clear and clean of grass clippings and chaff. This will help engine air flow and extend engine life.
- Clean the underside of your lawn mower by scraping to remove build-up of grass and trash.
- Do not use a high pressure washer to clean the machine.
- Never flush water directly on the engine.
- Clean the air intake on the starter. Check the starter and starter cord.
- When cleaning under the cutting cover, empty the fuel tank and put the machine on its side with the muffler down.

CAUTION! With the exception of the water washout port (if equipped), we do not recommend using a garden hose to clean the outside of your lawn mower unless the electrical system, muffler, air filter and carburetor are covered to keep water out. Water in engine can result in shortened engine life.

Drive wheels

Check wheels each time before you mow to be sure they move freely. Clean the wheels if not rotating freely.

1 Remove the bolt.

2 Remove wheels from wheel adjusters.

3 Remove any trash or grass cuttings from inside the dust cover, pinion and/or drive wheel gear teeth.

4 Replace the wheels.

If after cleaning, the drive wheels do not turn freely, contact a authorized service workshop.

Grass catcher

- Pores in cloth grass catchers can become filled with dirt and dust with use and the catcher will collect less grass. To prevent this, regularly hose the grass catcher off with water and let dry before using.
- Check the grass catcher frequently for wear or deterioration. Replace if necessary.

Gear cases

- To keep your drive system working properly, the gear cases and area around the drive should be kept clean and free of trash build-up. Clean under the drive cover twice a season.
- The gear cases are filled with lubricant to the proper level at the factory. The only time the lubricant needs attention is if service has been performed on the gear case.
- Under normal usage the grass catcher is subject to deterioration and wear. Check the grass catcher frequently for wear or deterioration. Replace the bag only with grass bags that meet the manufacturer's recommendations and specifications.

Water washout feature

Your lawn mower is equipped with a fitting that allows quick and easy cleaning of the underside of the housing. Note that water, grass and other debris will drain from beneath the mower housing during the washout process.

1 Move the machine to an area of cut grass or another hard surface.

2 Remove grass catcher or mulch plug from the lawn mower.

3 Close the back shield.

4 Connect a garden hose to the washout port fitting.

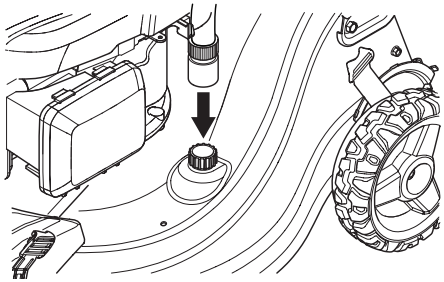

5 Turn on water supply and check for leaks at the fitting.

6 If no leaks are present, start engine and let engine run until the underside of the lawn mower is clean.

CAUTION! Do not engage the drive system during the washout process.

7 Turn off the engine.

8 Shut off water supply and remove hose from fitting.

IMPORTANT! Do not remove hose from fitting while engine is running. Water in engine can result in shortened engine life.

9 Start engine and let engine run for a full minute to remove excess water from mower.

Engine

Lubrication

Use only high quality detergent oil rated with API service classification SG-SL. Select the oil's SAE viscosity grade according to your expected operating temperature.

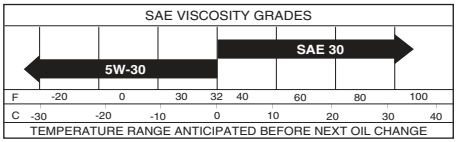

CAUTION! Although multi-viscosity oils (5W30, 10W30 etc.) improve starting in cold weather, these multi-viscosity oils will result in increased oil consumption when used above 32°F. Check your engine oil level more frequently to avoid possible engine damage from running low on oil.

- Change the oil after every 25 hours of operation or at least once a year.
- Check the engine oil level before starting the engine and after each 5 hours of continuous use. Tighten oil plug securely each time you check the oil level.

Oil level

Before starting for the first time

Your lawnmower is shipped without oil in the engine. You receive a container of oil with the unit. Slowly pour the entire container down the oil fill spout into the engine.

IMPORTANT! Do not overfill!

Check the engine's oil level

The lawn mower should stand on flat ground when you check the oil level. Ensure the ignition lead has been removed from the spark plug before you open the oil filler cap.

1 Check the oil level with the dipstick on the oil filler cap.

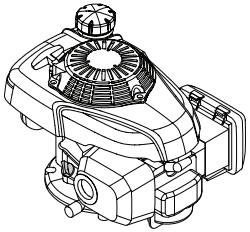

2 Remove the oil cap and wipe the dipstick clean.

3 Put the dipstick back in. The oil filler cap must be completely screwed down to give a correct picture of the oil level.

4 If the oil level is low, fill using engine oil up to the upper level on the dipstick.

CAUTION! Initial oil fill requires only 15 oz. due to residual oil in engine from the manufacturers 100% quality testing. When changing oil you may need 18 oz.

Add oil

1 The lawn mower should stand on flat ground when you check the oil level. Ensure the ignition lead has been removed from the spark plug before you open the oil filler cap.

2 Remove the oil cap and wipe the dipstick clean.

3 Slowly pour oil down the oil fill spout, stopping evey few ounces to check the oil level with the dipstick.

4 Stop adding oil when you reach the FULL mark on the dipstick. Wait a minute to allow oil to settle.

5 Always be sure to retighten oil dipstick before starting engine.

6 Refit cable to spark plug.

Oil change

CAUTION! The oil level must always be checked before starting the engine.

Change the oil after every 25 hours of operation or at least once a year. Clean more often if conditions are exceptionally dusty. Follow the maintenance schedule in this manual.

1 Disconnect the spark plug wire from the spark plug.

2 Always empty the fuel tank before you place the lawn mower on its side. Empty the fuel tank by running the machine until the tank is empty.

3 Unscrew the oil filler cap.

4 Place a suitable vessel in position to collect the oil as it drains.

5 Drain the oil by tipping the engine so that the oil runs out through the filler pipe. When the machine is tilted, make sure the air filter always is placed in the highest position. Ask where you can dispose of surplus engine oil at your local gas station.

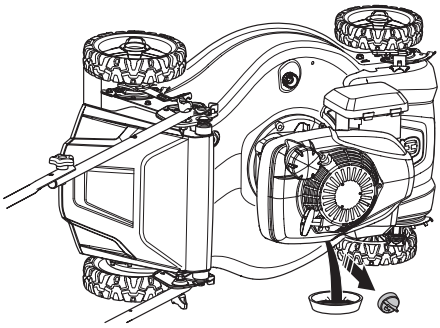

6 If you have spilled fuel or engine oil on the machine, wipe off the spillage and allow remaining fuel to evaporate.

7 Slowly pour oil down the oil fill spout, stopping evey few ounces to check the oil level with the dipstick. Do not overfill!

8 Always be sure to retighten oil dipstick before starting engine.

9 Reconnect to the spark plug wire.

Muffler

If the muffler is corroded or is damaged in any other way, it must be replaced because it may become a fire hazard and/or cause injury.

Spark plug

CAUTION! Always use the recommended spark plug type! Use of the wrong spark plug can damage the piston/cylinder.

- Replace spark plug at the beginning of each mowing season or after every 100 hours of operation, whichever occurs first. Spark plug type and gap setting are shown in the ”Product specification” section of this manual.

Air filter

Your engine will not run properly and may be damaged by using a dirty air filter. Replace the air filter cartridge every 100 hours of operation or every season, which ever occurs first. Service air cleaner more often under dusty conditions.

- Remove the air filter cover and take out the filter.
- Clean the filter by knocking the filter against a flat surface. Never use solvent with petroleum, for example, kerosene, or compressed air to clean the filter.
- An air filter that has been in use for a long time cannot be cleaned completely. The filter must therefore be replaced with a new one at regular intervals. **A damaged air filter must always be replaced.**
- When reassembling, make sure that the filter completely seals against the filter holder.

Blade

WARNING! Always wear heavy-duty gloves when servicing and maintaining the blade. The blade is very sharp and cuts can occur very easily.

Always stop the engine before doing any work on the blade. This continues to rotate even after the throttle has been released. Ensure that the blade has stopped completely and disconnect the spark plug cap before you start to work on it.

- Check the blade for cracks or any other damage. A damaged blade must always be replaced.
- Always ensure the blade is well ground and balanced correctly. To check blade balance, you will need a 5/8" diameter steel bolt, pin, or a cone balancer. When using a cone balancer, follow the instructions supplied with balancer.
- Do not use a nail for balancing blade. The lobes of the center hole may appear to be centered, but are not.
- Slide blade on to an unthreaded portion of the steel bolt or pin and hold the bolt or pin parallel with the ground. If blade is balanced, it should remain in a horizontal position. If either end of the blade moves downward, sharpen the heavy end until the blade is balanced.

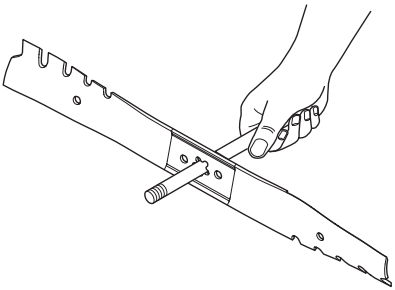

IMPORTANT! The blades should be balanced after sharpening. We do not recommend sharpening blade. Sharpening and balancing the blade should be conducted by an authorized service workshop.

Damaged blades should be replaced immediately. NEVER use a mower with a damaged blade.

Replacing the blades

1 Always disconnect the spark plug before performing maintenance or service.

2 Always empty the fuel tank before you place the lawn mower on its side. Empty the fuel tank by running the machine until the tank is empty.

3 Turn lawn mower on its side. When the machine is tilted, make sure the air filter always is placed in the highest position.

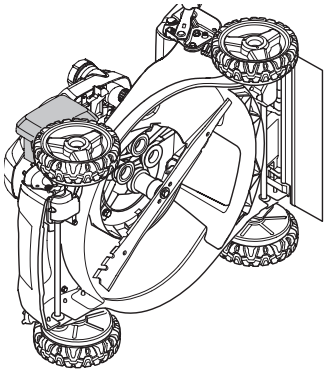

4 Use a wood block between blade and mower housing to prevent blade from turning when removing blade bolt.

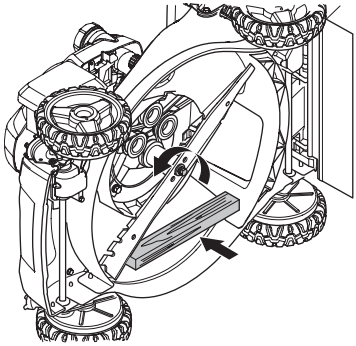

5 Remove the blade bolt by turning the bolt counter-clockwise.

6 Remove the old blade. Make sure the blade adapter is free of damage. Also check that the blade bolt is undamaged and that the engine shaft is not bent.

IMPORTANT! Use only a replacement blade approved by the manufacturer of your mower. Using a blade not approved by the manufacturer of your mower is hazardous, could damage your mower and void your warranty.

Assembly:

1 Position the blade adapter on the engine crank shaft. Be sure key in adapter and crankshaft keyway are aligned and that the drive belt is inside the tab of the belt retainer.

2 The blade must be mounted with the angled ends pointing up towards the engine.

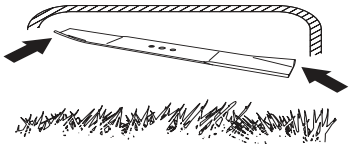

3 Install the blade bolt with the lock washer and hardened washer into blade adapter and crankshaft.

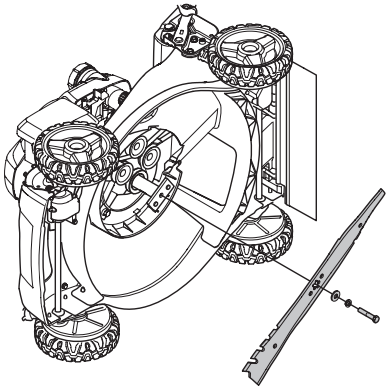

4 Use block of wood between blade and lawn mower housing and tighten the blade bolt, turning clockwise.

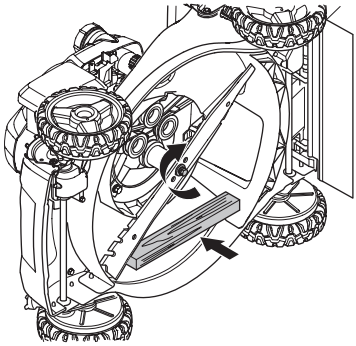

5 The bolt should be tightened with a torque of 35-40 ft. lbs. / 47-54 Nm.

6 Verify the spark plug wire is disconnected from the engine.

WARNING! Always disconnect spark plug wire and place wire where it cannot contact spark plug to prevent accidental starting.

7 Pull the blade around by hand and make sure it rotates freely.

IMPORTANT!

Always exercise care and use your common sense. Avoid all situations which you consider to be beyond your capability. If you still feel uncertain about operating procedures after reading these instructions, you should consult an expert before continuing. Contact an authorized service workshop.

Always use genuine parts.

Drive belt

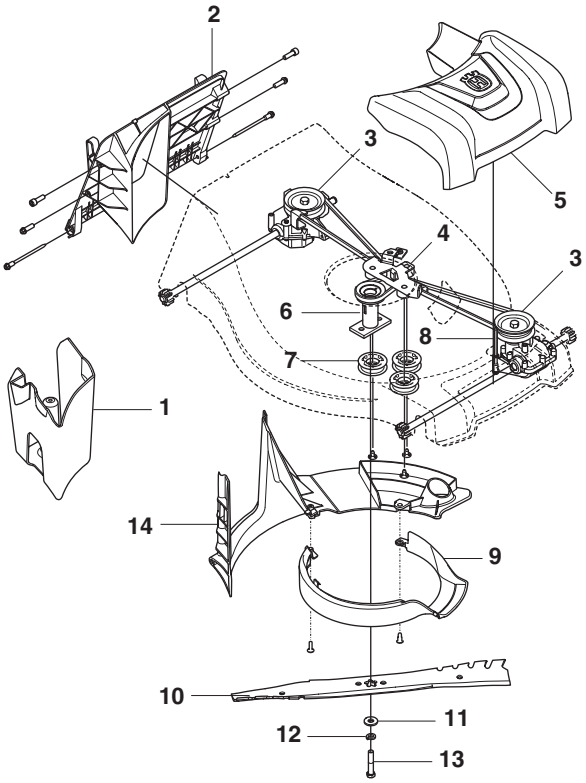

1 Mulch plug
2 Rear insert
3 Transmission drive pulley
4 Idler bracket
5 Drive cover
6 Blade adapter
7 Idler pulleys
8 Front belt keeper
9 Stripper ring
10 Blade
11 Hardened washer
12 Lock washer
13 Blade bolt
14 Belt cover

Remove the drive belt

- Empty the fuel tank by running the machine until the tank is empty.
- Always disconnect the spark plug before performing maintenance or accessing mocable parts.
- Turn lawn mower on its side. Make sure air filter and carburetor is facing upward.
- Remove drive cover.

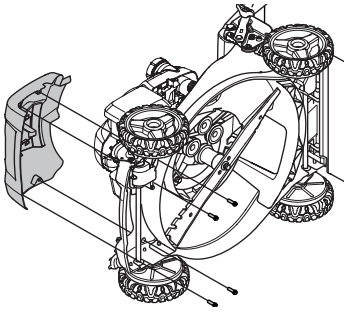

- Remove the blade bolt by turning the bolt counter-clockwise. Remove blade and attaching hardware: bolt, lock washer and hardened washer.

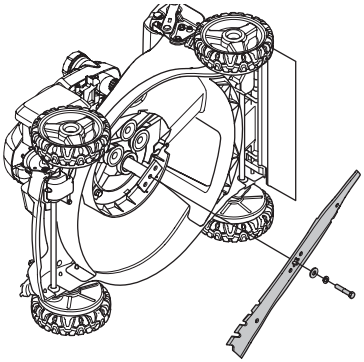

- Remove the Mulching plug.

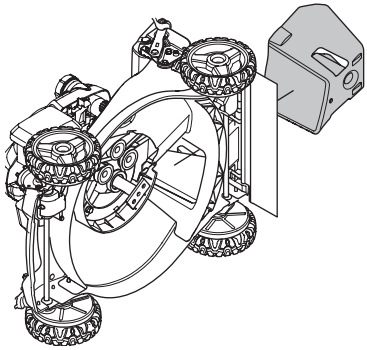

- Remove rear insert.
- Remove the belt cover and the stripper ring.

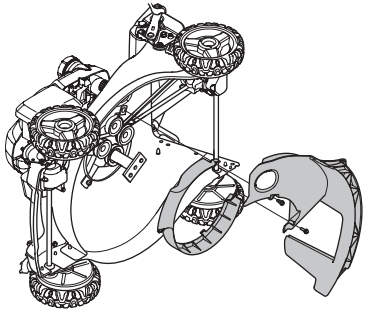

- Disconnect cable from rear transmission.
- Remove front belt keeper.
- Remove belt from front transmission pulley.
- Remove all 3 idler pulleys from idler assembly.

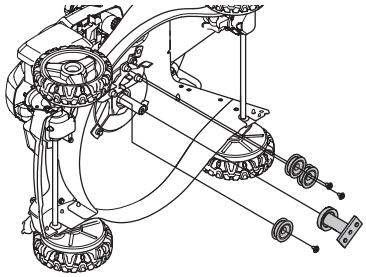

- Remove belt from blade adapter / engine pulley and idler assembly.

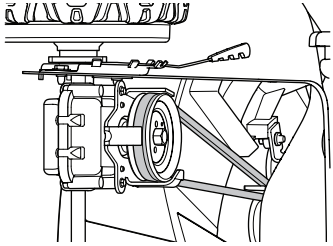

- Remove rear transmission pulley by clamping locking pilers to the input shaft of the transmission, beneath pulley, and loosen the pulley with a 9/16" box wrench.
- Remove the old drive belt.

Replace the drive belt.

IMPORTANT! Always use genuine parts.

- Place new belt on rear transmission pulley. Be sure the new belt is inside the tabs of the belt keeper.
- Reinstall rear transmission pulley. Route the other end of the new belt through hole in housing to front transmission pulley. Route new belt through idler assembly to blade adapter / engine pulley.
- Reinstall all 3 idler pulleys.
- Position the blade adapter / engine pulley on the engine crank shaft. Be sure key in blade adapter / engine pulley and crankshaft keyway are aligned and that the new belt is inside the tab of the belt retainer. Install new belt on front transmission pulley.
- Reinstall front belt keeper. Make sure the new belt is inside the front belt keeper.
- Reinstall drive cover.
- Reattach cable to rear transmission and reattach return spring to rear insert / rear transmission belt keeper.
- Reinstall rear insert.
- Reinstall the blade. See instructions in the section ”Replacing the blades”.
- Tighten spark plug.

TROUBLESHOOTING

Troubleshooting schedule

WARNING! If service operations or troubleshooting does not require the machine to be on, the engine should be switched off, and the spark plug wire disconnected from the spark plug.

Problem	Probable cause	Potential Solution
The machine does not start	Incorrect starting procedure.	See instructions under the heading Starting and stopping.
	Air filter clogged	Clean the air filter. Replace if necessary.
	There is no fuel in the fuel tank	Refill with fuel
	Spark plug defective	Replace the spark plug.
	Spark plug cable disconnected.	Check that the spark plug wire is connected to the spark plug.
	Loose blade or broken blade adapter	Tighten blade bolt or replace blade adapter.
	Defect engine brake handle	Contact an authorized service workshop.
	Fuel valve lever (if equipped) in OFF postion	Turn fuel valve lever to the ON position.
	The battery voltage is too low (if equipped)	Charge the battery.
	Battery connected incorrectly (if equipped)	Connect battery to engine
Less power	Height of cut too low.	Raise height of cut.
	Cutting extremely tall grass	
	Air filter clogged	Clean the air filter. Replace if necessary.
	Buildup of grass, leaves and trash under mower	Clean underside of mower housing.
	Too much oil in the engine	Check the engine's oil level
	Walking speed too fast	Cut at slower walking speed.
Uneven mowing	Worn, bent or loose blade	Replace the blade if it is bent or damaged.
	Wheel heights uneven	Set all wheels at same height
	Buildup of grass, leaves and trash under mower	Clean underside of mower housing.
Excessive vibrations	Worn, bent or loose blade	Replace the blade if it is bent or damaged.
	Bent engine crankshaft	Contact an authorized service workshop.
Starter rope hard to pull	Engine flywheel brake is on when the engine brake handle is released	Depress the engine brake handle to upper handle before pulling starter rope.
	Bent engine crankshaft	Contact an authorized service workshop.
	Blade adapter broken	Contact your service agent.
	Incorrect starting procedure.	See instructions under the heading Starting and stopping.
Grass catcher not filling (if equippped)	Cutting height too low	Raise height of cut.
	Worn blade	Replace the blade
	Catcher not venting air	Clean / Inspect Grass Catcher
Difficult to push the machine forward	Cutting extremely tall grass	Raise height of cut.
	Cutting height too low	
	Grass catcher too full	Empty the grass catcher
	Handle height not right for you	Adjust handle height (if equippped)
Drive starts feeling slow	Belt wear	See instructions under the heading Replacing the drive belt.
	Belt off of pulley	
	Worn, damaged or untensioned clutch wire	For more information, see the "Starting and Stopping" section.

Original instructions

1159378-27

2017-08-31