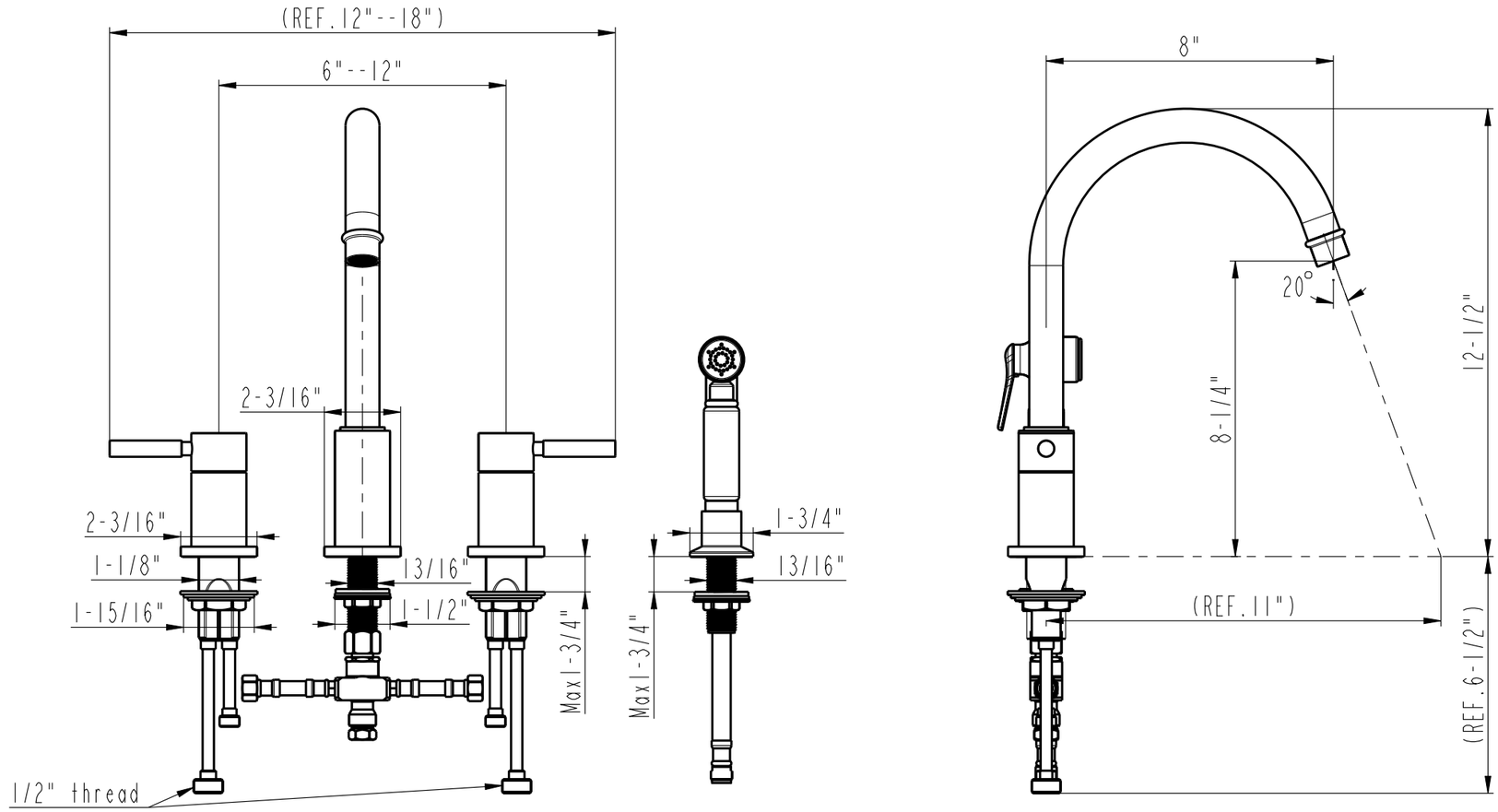

1:4

96866-Specifications