LED DRIVER & CONTROLLER INSTALLATION GUIDE

LED Driver & Controller Installation Guide
24V Plug-and-Play Lighting System

Safety & Warning Information
Read Before Installation

Read all instructions before installing or operating this lighting system.
Failure to follow these instructions may result in electric shock, fire, or personal injury.
Read the instructions for all lighting components including the LED lights, driver, receiver, and remote control before installation.
Keep these instructions in a safe place and provide them to the end user after installation.

- **Electrical Safety:**
  - This lighting system operates on low-voltage DC power supplied by an external driver.
  - Use only the driver and components specified for this system.
  - Do not open, modify, or attempt to repair any electrical components.
  - Do not insert foreign objects into connectors or component openings.
  - Do not expose electrical components to moisture or water.
  - Do not install the system in damp, corrosive, or potentially explosive environments.
  - Never carry components by the cable or pull the cable to disconnect it from a socket.
  - Do not drill into or damage wiring or cables.
  - Install components so that wires and electrical parts cannot be accessed by children.
- **Intended Use:**

  This lighting system is designed for:
  - Installation on or inside furniture
  - Indoor use only
  - Dry interior environments (IP20 rated)
  - Operating temperature range: –20 °C to +45 °C (–4 °F to 113 °F)
- **Installation**

  Before beginning installation:
  - Verify that all components are present and undamaged.
  - Do not install damaged components.
  - Only use components supplied with or approved for this lighting system.
  - All electrical components must be installed with the power disconnected.
  - Disconnect the power supply before connecting or disconnecting any lighting components.
  - Ensure that the total wattage of all connected LED lights does not exceed the maximum output rating of the driver.
  - Refer to the driver label for maximum output specifications.
  - Install the driver in a location with adequate ventilation.
  - Do not cover the driver.
  - Do not stack multiple drivers together.

Safety & Warning Information
Read Before Installation

- **Cleaning & Maintenance:**
  - Disconnect the system from power before cleaning.
  - Clean components using a soft, dry, lint-free cloth only.
  - Do not use:
    - Liquids
    - Chemical cleaning agents
    - Abrasive cleaners
  - The lighting system contains no user-serviceable parts. If a component fails, replace the defective component or assembly.
- **Troubleshooting Lights Flashing or Not Operating Correctly:**
  - Possible causes:
    - Insufficient air circulation around the driver
    - Total connected wattage exceeding the driver capacity
  - Solutions:
    - Ensure proper ventilation around the driver
    - Reduce the number of connected lights so the total load remains within the driver rating
- **Disposal:**
  - Do not dispose of electrical components with household waste.
  - Follow local regulations for disposal of electronic equipment.

System Overview
Single Hanging Rod – Power Setup (18W System)

This configuration is designed for a single LED hanging rod using an 18W driver.

Power Flow:

120V Wall Outlet → 18W Driver → Wireless Receiver → LED Hanging Rod

- Standalone system (no expansion)
- No load calculation required
- Uses same receiver and remote system as the multi-light setup

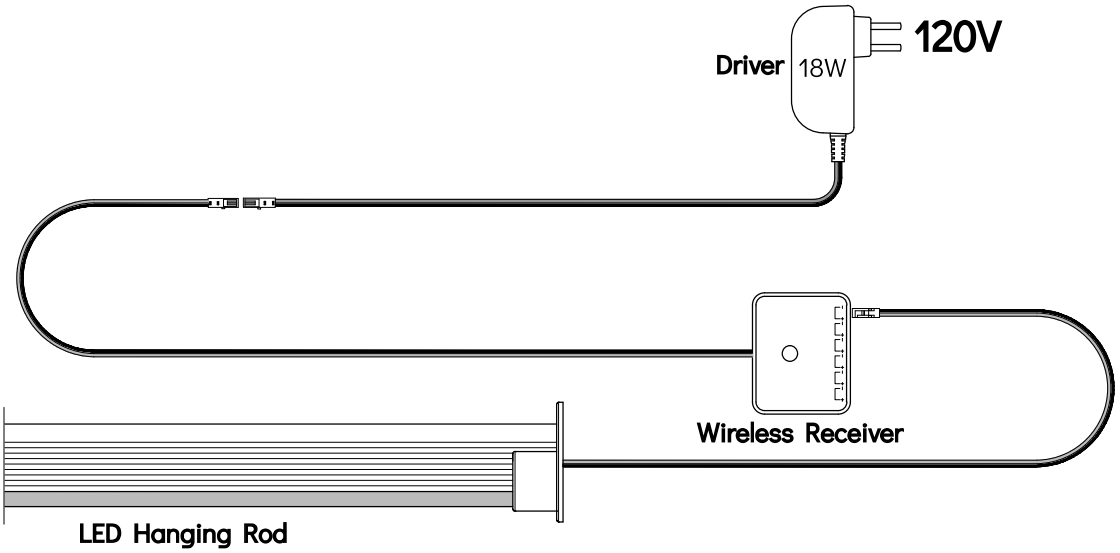

Power flow diagram

Connection Steps:

- Connect Receiver to Driver
  Plug the receiver's 2-pin connector into the 18W driver output
- Connect LED Hanging Rod
  - Plug the LED rod cable into any receiver output port.
  - Ensure connector is fully seated
- Power on
  - Plug in driver and verify LED turns on.
  - Continue to Steps 7–8 for remote setup.

System Overview
Multi-Light System – Power & Control Setup (96W System)

This system provides centralized 24V DC power and wireless control for multiple LED lighting components.

Power Flow:

120V Wall Outlet → 96W Driver → Wireless Receiver → LED Lighting

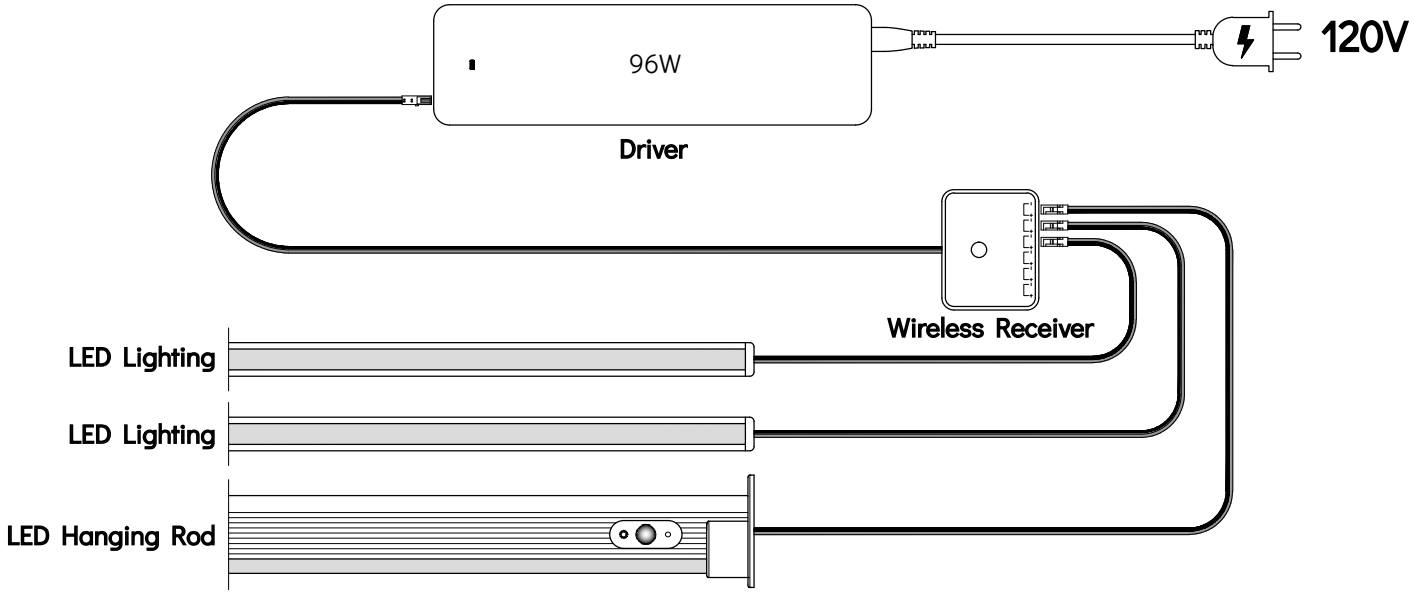

Power flow diagram

- The driver plugs into a standard US wall outlet.
- The receiver connects directly to the driver.
- All lighting connects to the receiver output ports.
- The touch remote pairs wirelessly to one or more receivers.
- No wire stripping or electrical termination is required.

Preparation Steps

Plan Lighting Load (Required)

The lighting system supports a maximum connected load of **96W per driver**.

Lighting Wattage Reference:

- **Linear Light (2-piece pair): ~2W / ft**
- **LED Hanging Rod: ~6W / ft**

Add the total wattage of all connected lighting components.

The total connected load must not exceed **96W** per driver.

For optimal performance and service life, a maximum connected load of **85W** per driver is recommended.

If the total connected load exceeds **96W**:

- Install an additional **96W** driver.
- Install an additional receiver.
- Divide the lighting into separate control zones.

Installation Steps

1 Install the 96W Driver

Model: **TRC-H-DRI-96W**
Output: 24V DC
Max Output: 96W

- Install in a dry, ventilated location.
- Do not cover or enclose the driver in insulation.
- Ensure air circulation around the unit.

Do not plug in the driver at this stage. Power will be connected during Step 6

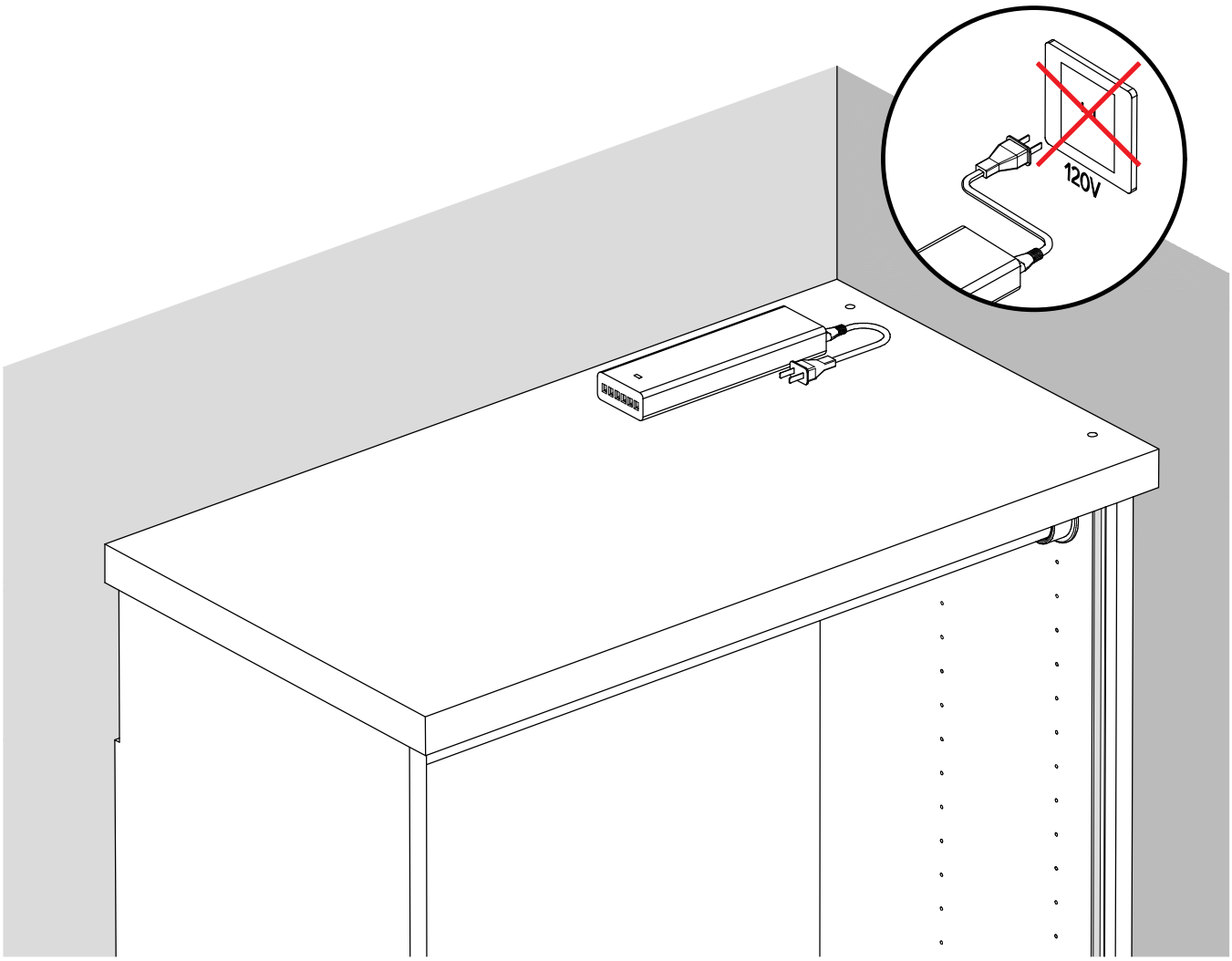

Installation Steps

- **AC Daisy Chaining (Optional)**

  Drivers may be connected together using the built-in AC pass-through connection.
  - Each driver powers its own receiver and lighting zone.
  - Do not exceed the rating of the wall outlet or branch circuit.
  - Ensure adequate ventilation when installing multiple drivers together.

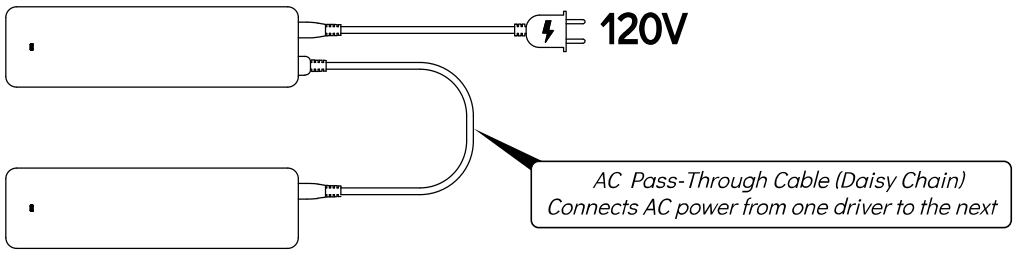

2 Install the Wireless Receiver

- Mount the receiver near the driver.
- Ensure the pairing button remains accessible.
- Avoid fully enclosing the receiver in metal cavities that may reduce signal range.

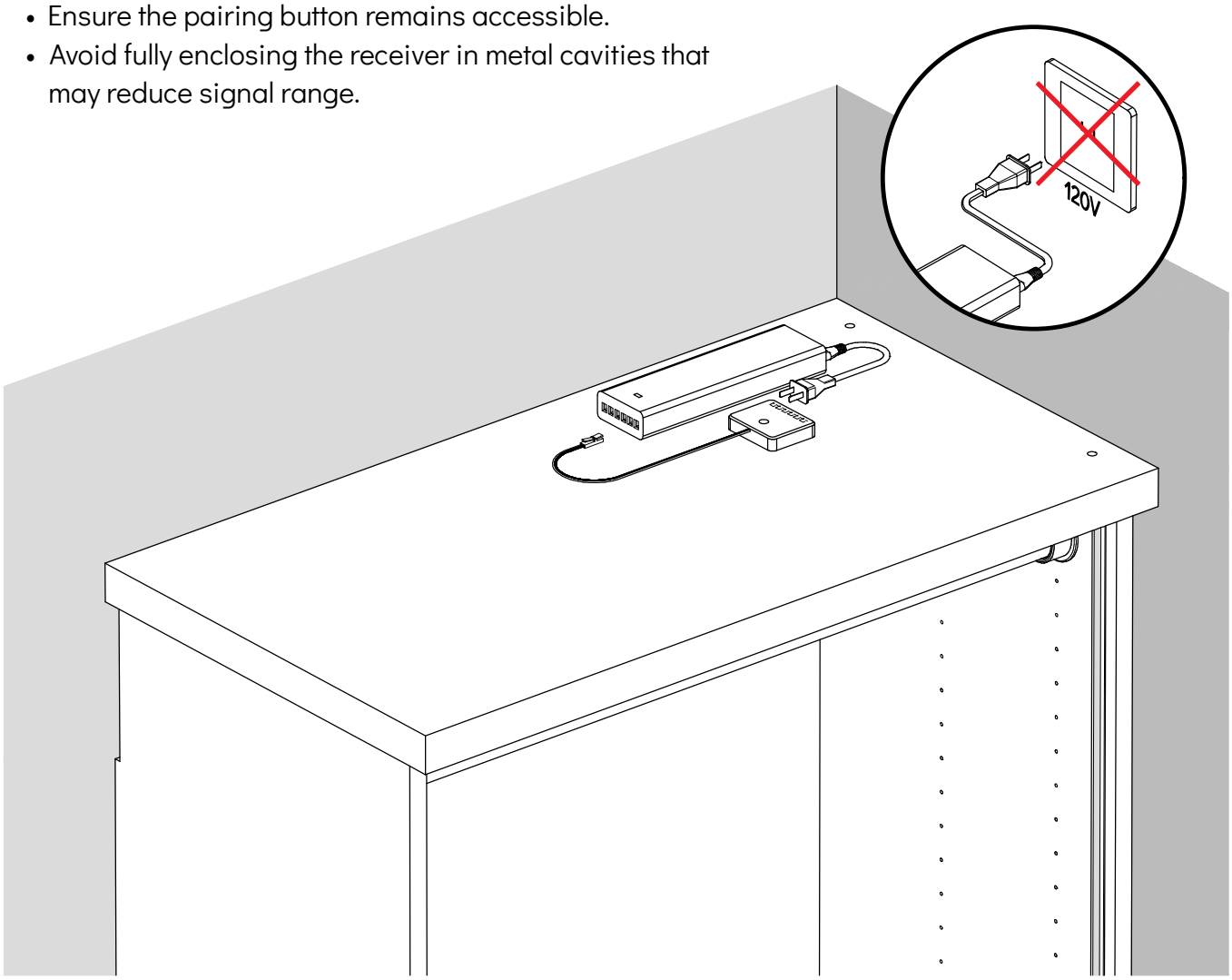

Installation Steps

3 Connect Receiver to Driver

The receiver includes a permanently attached 2-pin inline DC input cable.

- Plug the receiver cable directly into the driver's 24V output connector.
- Align the connector carefully before inserting.
- Ensure correct orientation.
- Do not force the connection.

The connector ensures polarity when properly aligned.

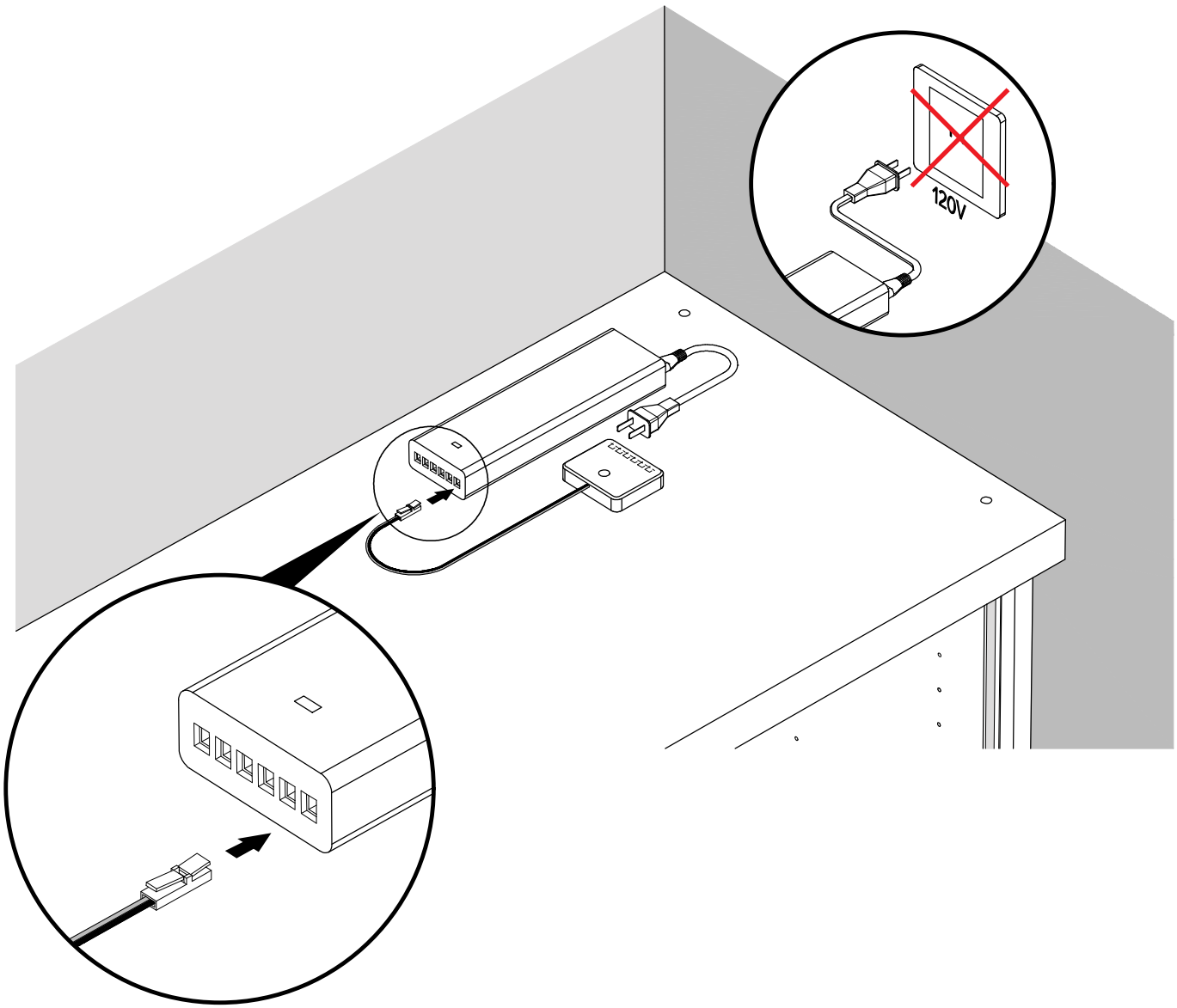

Installation Steps

4 Connect Lighting to the Receiver

- Connect each lighting fixture to any available output port on the receiver.
- Ensure connectors are fully seated.
- Secure wiring to prevent tension or pinching.

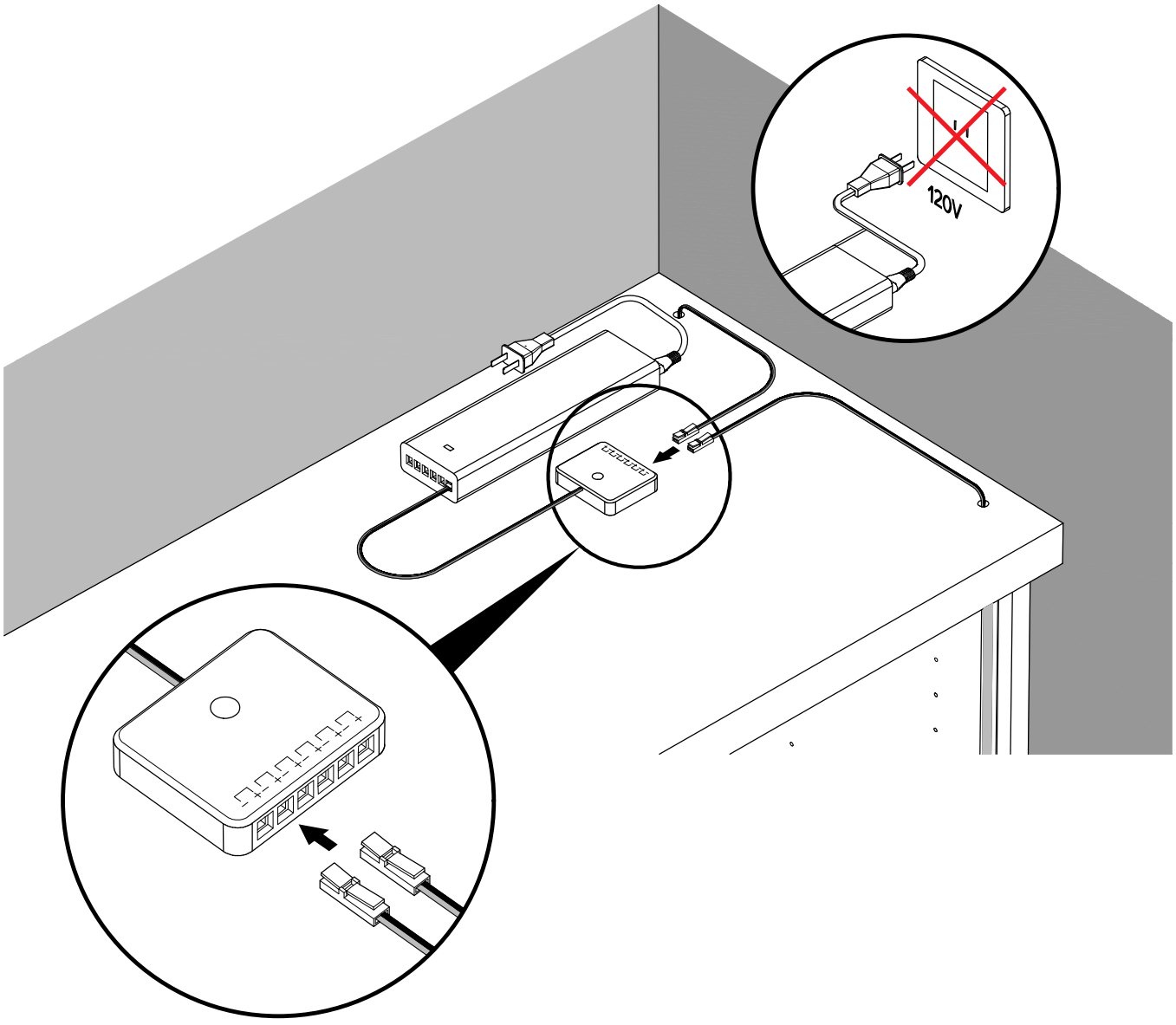

Installation Steps

5 Power On and Test

- Confirm all connections are secure.
- Plug the driver into the wall outlet.
- Verify lighting powers on, the lights should turn on in the default state.
- Proceed to pairing.

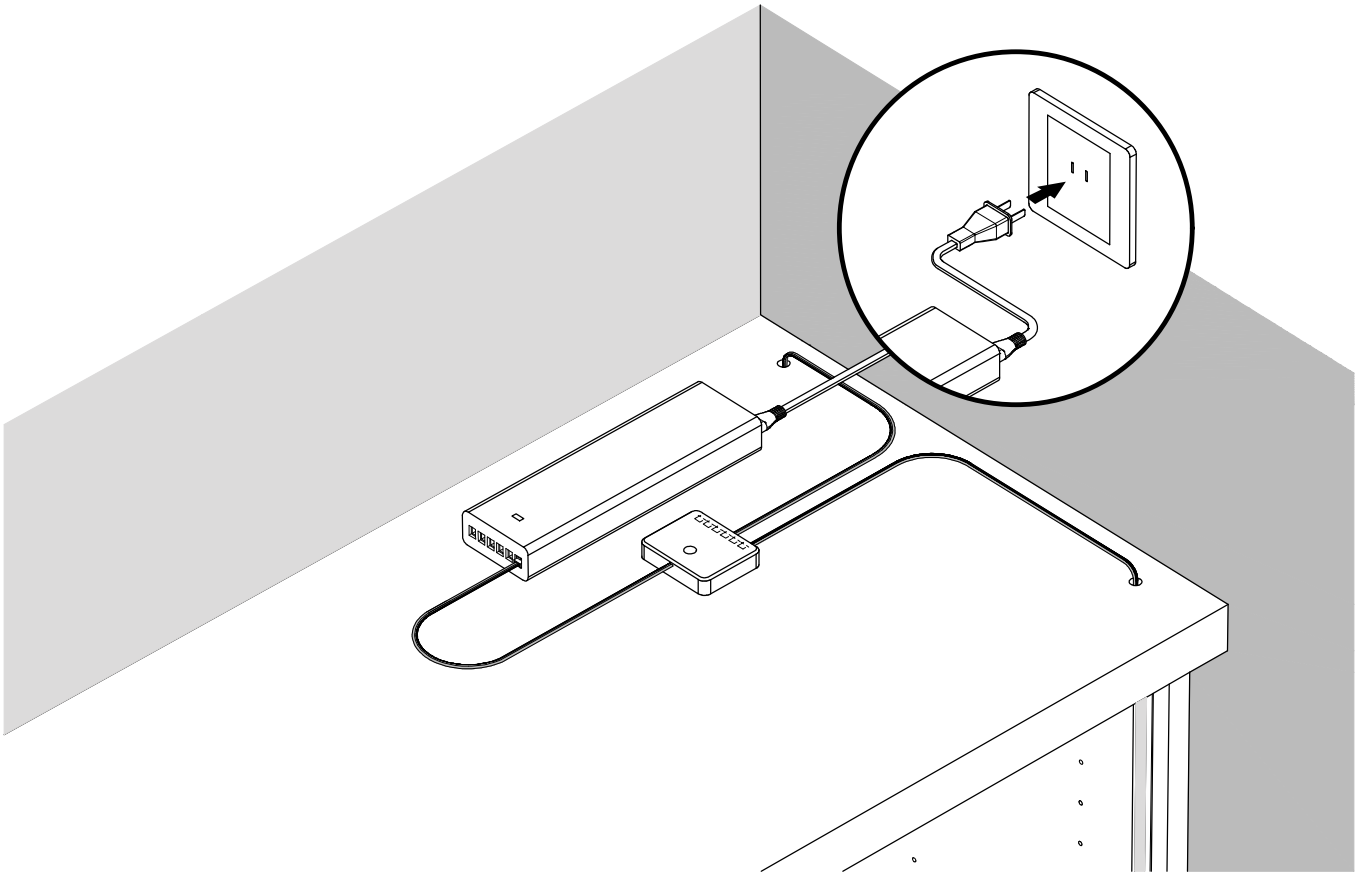

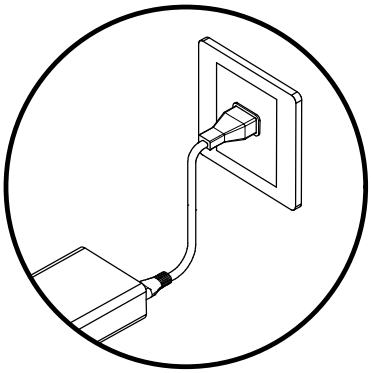

The driver is plugged into a standard 120V wall outlet

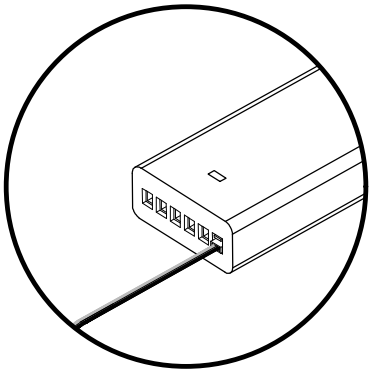

The receiver cable is plugged into the driver's 24V output connector

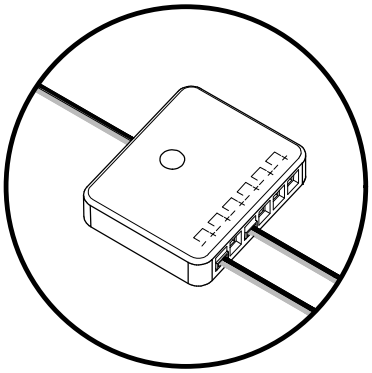

The lighting cable is plugged into output port on the receiver

Installation Steps

6 Install the Square Touch Remote

Model: **TRC-H-REM-01**

The remote includes a magnetic mounting plate with adhesive backing.

- Attach the mounting plate to a clean, convenient, and accessible surface.
- The remote magnetically attaches to the plate.
- Ensure the rear ON/OFF switch is set to ON before use.

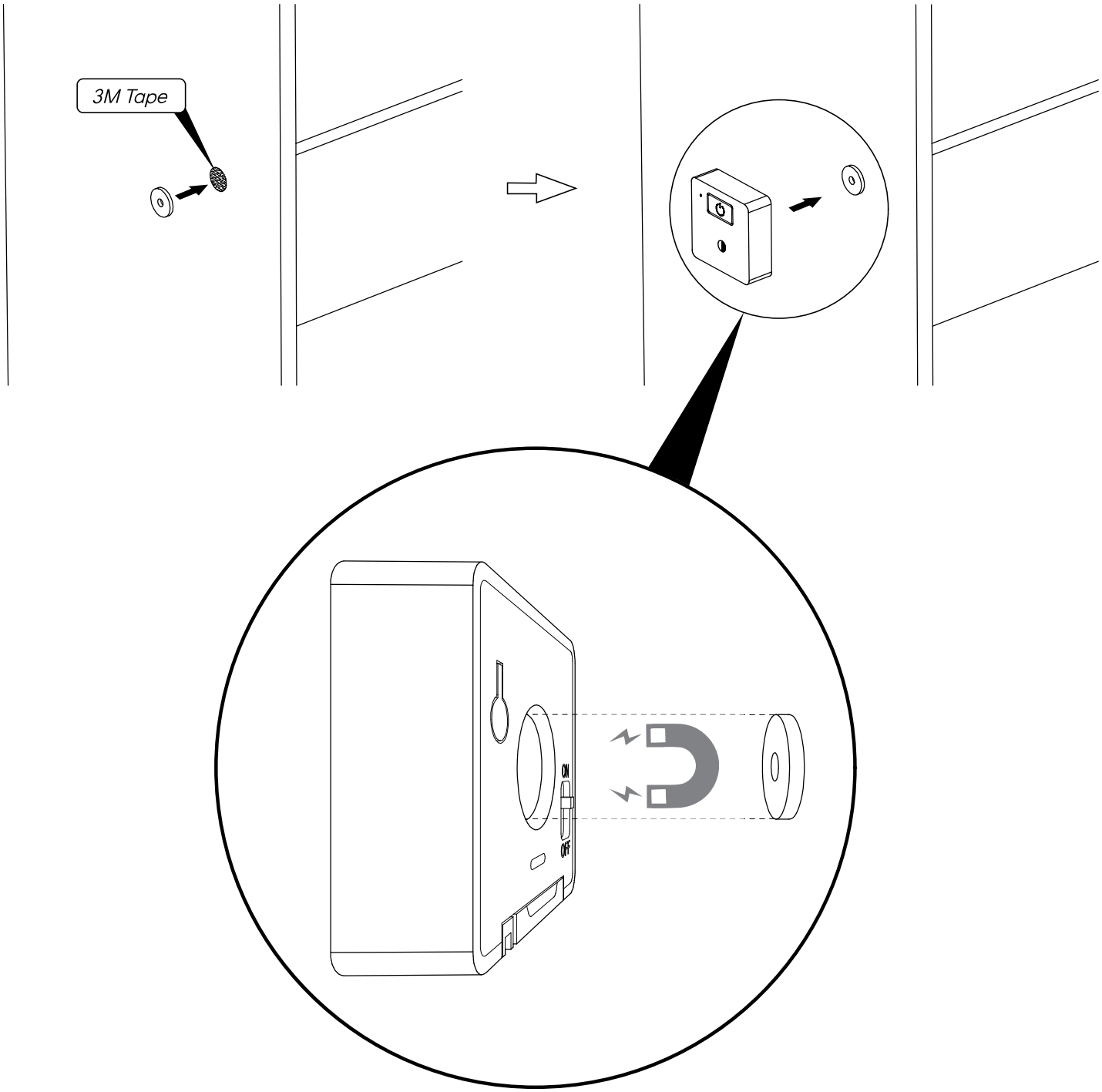

Installation Steps

- **Remote Battery Replacement**

Model: **TRC-H-REM-01**
Battery Type: CR2450 (3V)
The remote uses one replaceable CR2450 coin cell battery.

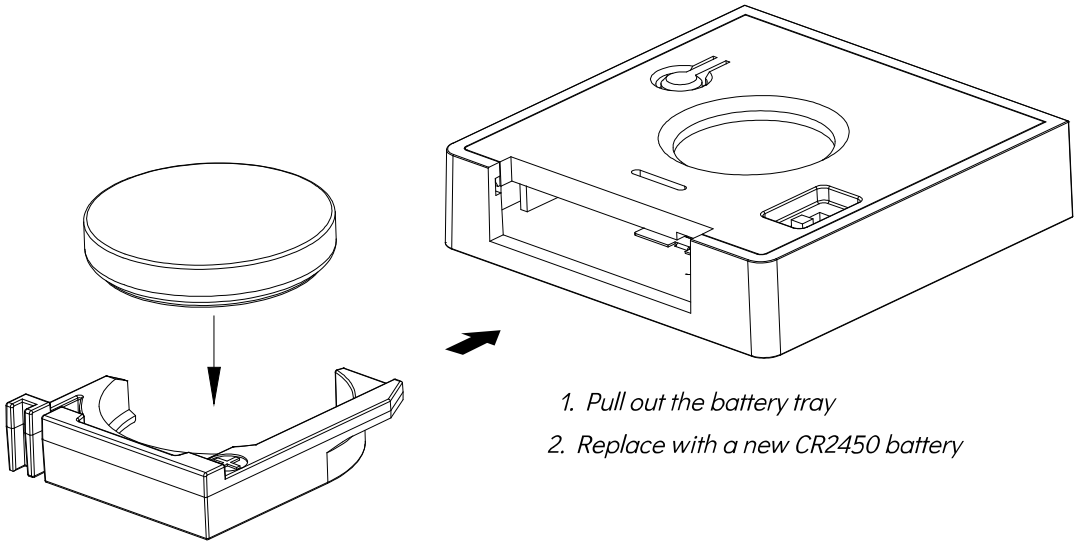

1. Pull out the battery tray
2. Replace with a new CR2450 battery

7 Pair the Remote to the Receiver

1. Power on the system.
2. Press the pairing button on the receiver.
3. Within 3 seconds press the pairing button on the remote.
4. Lights will flash to confirm pairing.

Note:

- One remote can be paired with multiple receivers.
- One receiver can be paired with multiple remotes.

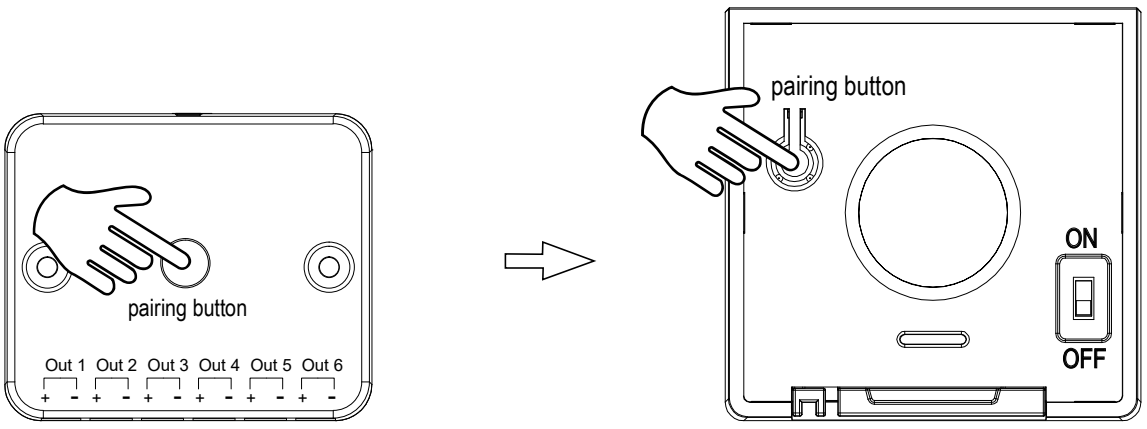

Press the pairing button on the receiver.

Press the pairing button on the remote.

Installation Steps

- **Test functions**
  1. Test on/off function
  2. Test CCT function (Color temperature adjustment)
  3. Test dimming function

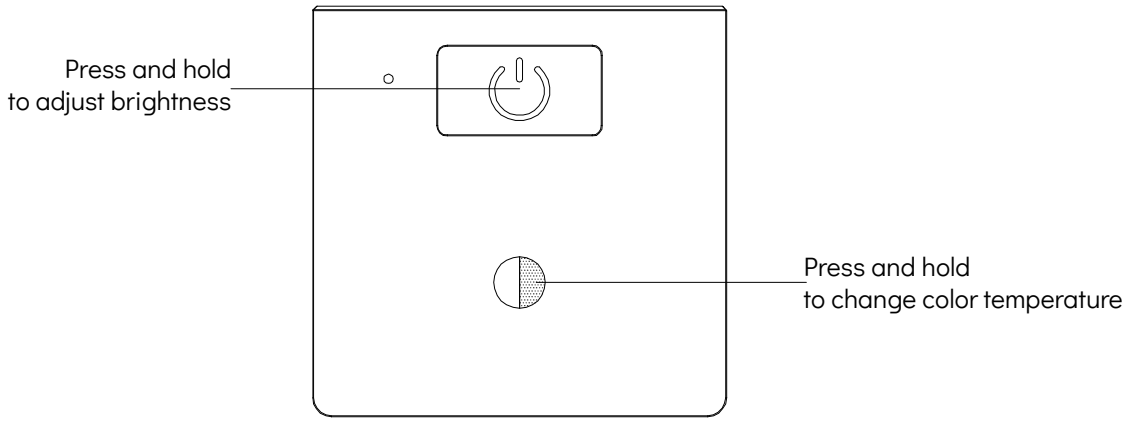

- **Unpairing**
  1. Power on the system.
  2. Press and hold the receiver pairing button for more than 3 seconds.
  3. Lights will flash to confirm unpairing.

  One remote can control multiple receivers

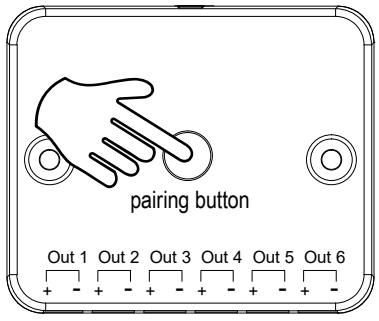

Press and hold the receiver pairing button for more than 3 seconds.

Technical Specifications

Driver – TRC-H-DRI-96W

- Input: 100–240VAC, 50/60Hz
- Output: 24V DC
- Max Output Power: 96W
- Max Output Current: 4A
- Certification: UL Listed
- Cord: 5 ft US plug
- Dimensions: 230 × 74 × 15 mm

Square Touch Remote – TRC-H-REM-01

- Control: On/Off, Dimming, CCT
- Battery: CR2450 (replaceable)
- Wireless Range: Up to 10m
- Dimensions: 48 × 46 × 12.5 mm

Wireless Receiver – TRC-H-CMO-SY

- Input: 24V DC
- System Rated Output: 96W
- Output Ports: 6
- Wireless Range: Up to 10m
- Finish: Black
- Dimensions: 60 × 50 × 10 mm