INSTALLATION
Product Manual

Version: 260123-01-24A-SCX

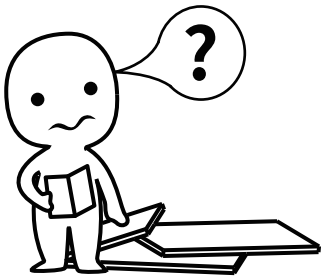

IMPORTANT INFORMATION!

please read the entire manual before starting to assemble and/or using this product.follow the manual thoroughly and keep it for further reference.

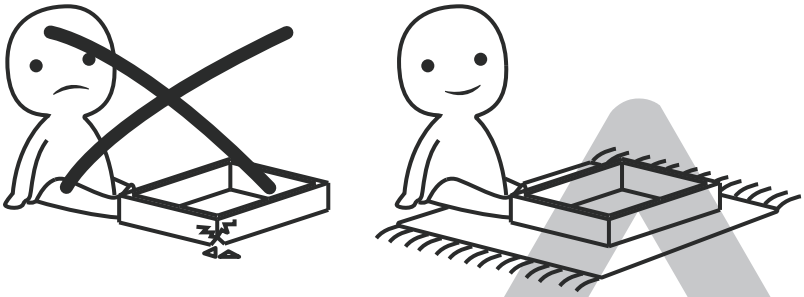

AVOID SCRATCHES!

In order to avoid scratching this furnuture should be assembled on a soft layer-could be a rug.

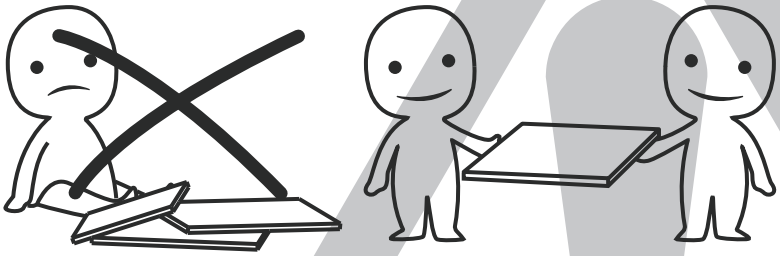

IMPROVE EFFICIENCY !

Try to find a partner to install with you, which can speed up the installation efficiency and shorten the time.

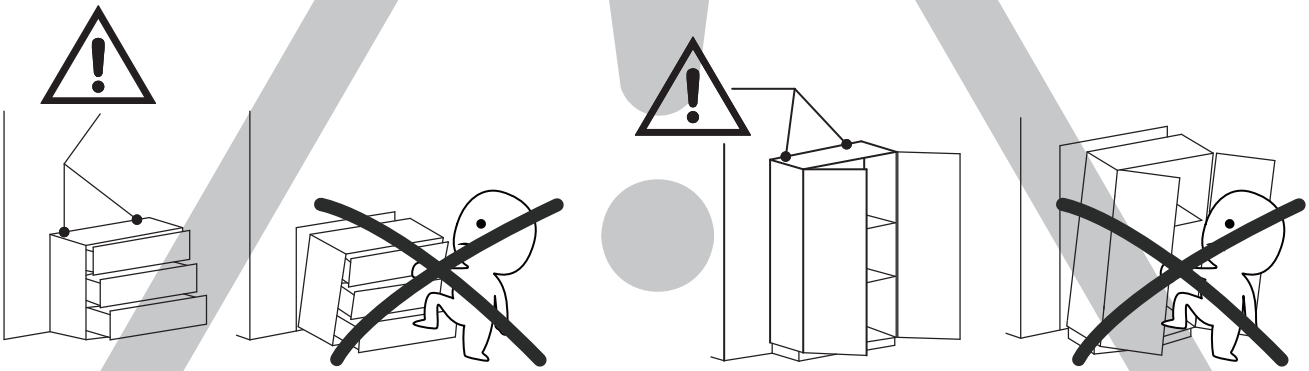

ANTI-TOPPLE WARNING !

Overturned furniture can cause serious or fatal crush injuries. To prevent tipping over, be sure to use the wall attachment, if not included with this product. Please purchase the wall attachment that fit your wall. If unsure, seek professional advice. Please read and follow each step of the instructions carefully.

IMPORTANT !

It is important that any product which is assembled using any kind of screw is re-tightened 2 weeks after assembly,and once every 3 months - in order to assure stability through-out the lifespan of the product.

For regular maintenance and cleaning of the product, for the frame, please use a rag dipped in neutral detergent to fully wipe it, and then dry it with a clean rag.For glass materials, wipe with a rag dampened with water glass cleaner, and then dry with a dry rag.

Do not use an electric screwdriver, and do not use too much force when installing, because the board is easy to break.

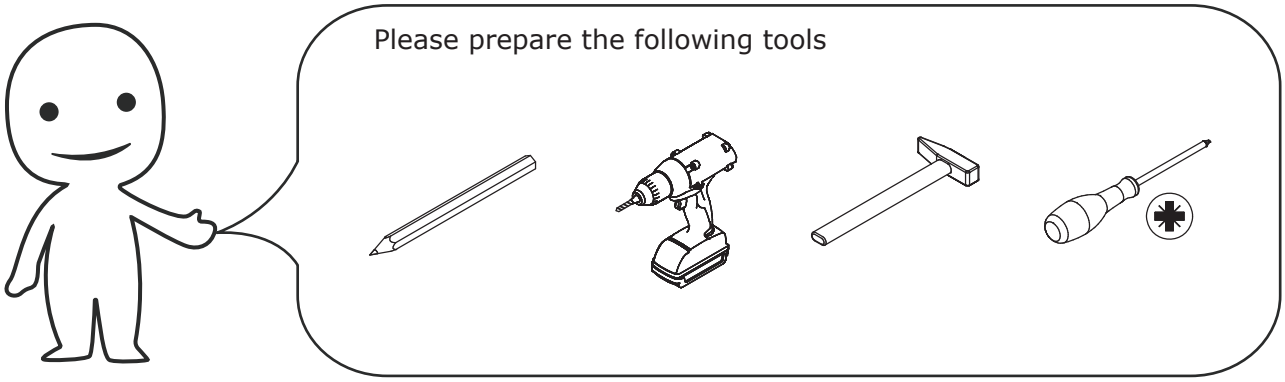

When installing, please carefully confirm whether each screw corresponds to the manual, accessories with similar shapes can be distinguished by size

A x 12+1	B x 12+1	C x 24	D x 8
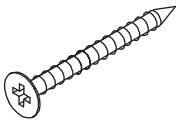	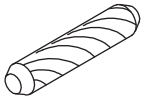	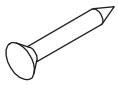	
∅4 x 35 mm	∅8 x 30 mm	∅2 x 20 mm	

E x 48+1	F x 4	G x 4	H x 4
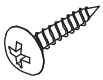	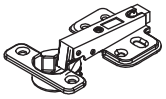		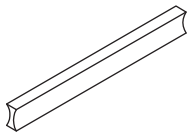
∅4 x 12 mm			L 128 mm

J x 8
∅4 x 18 mm

①

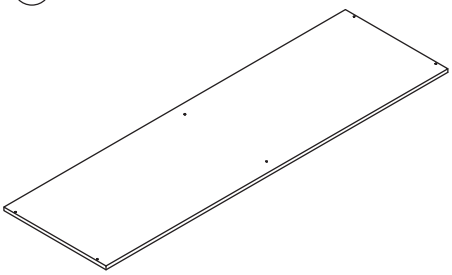

2PCS

②

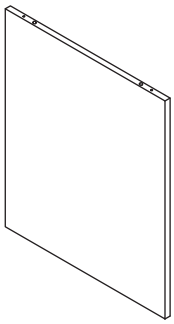

2PCS

③

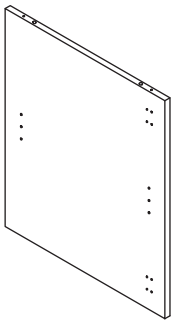

1PC

④

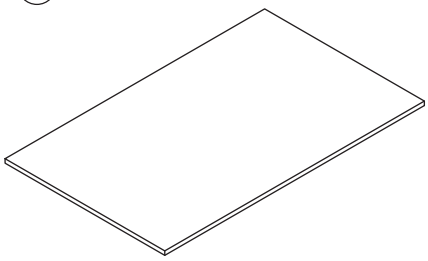

2PCS

⑤

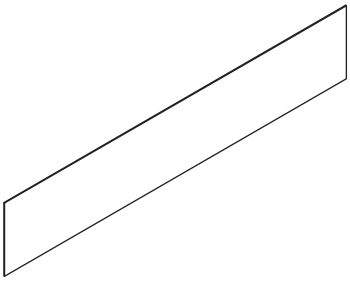

2PCS

⑥

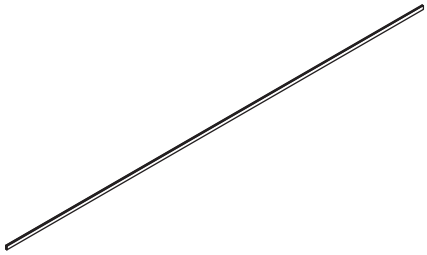

1PC

⑦

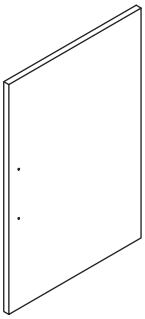

4PCS

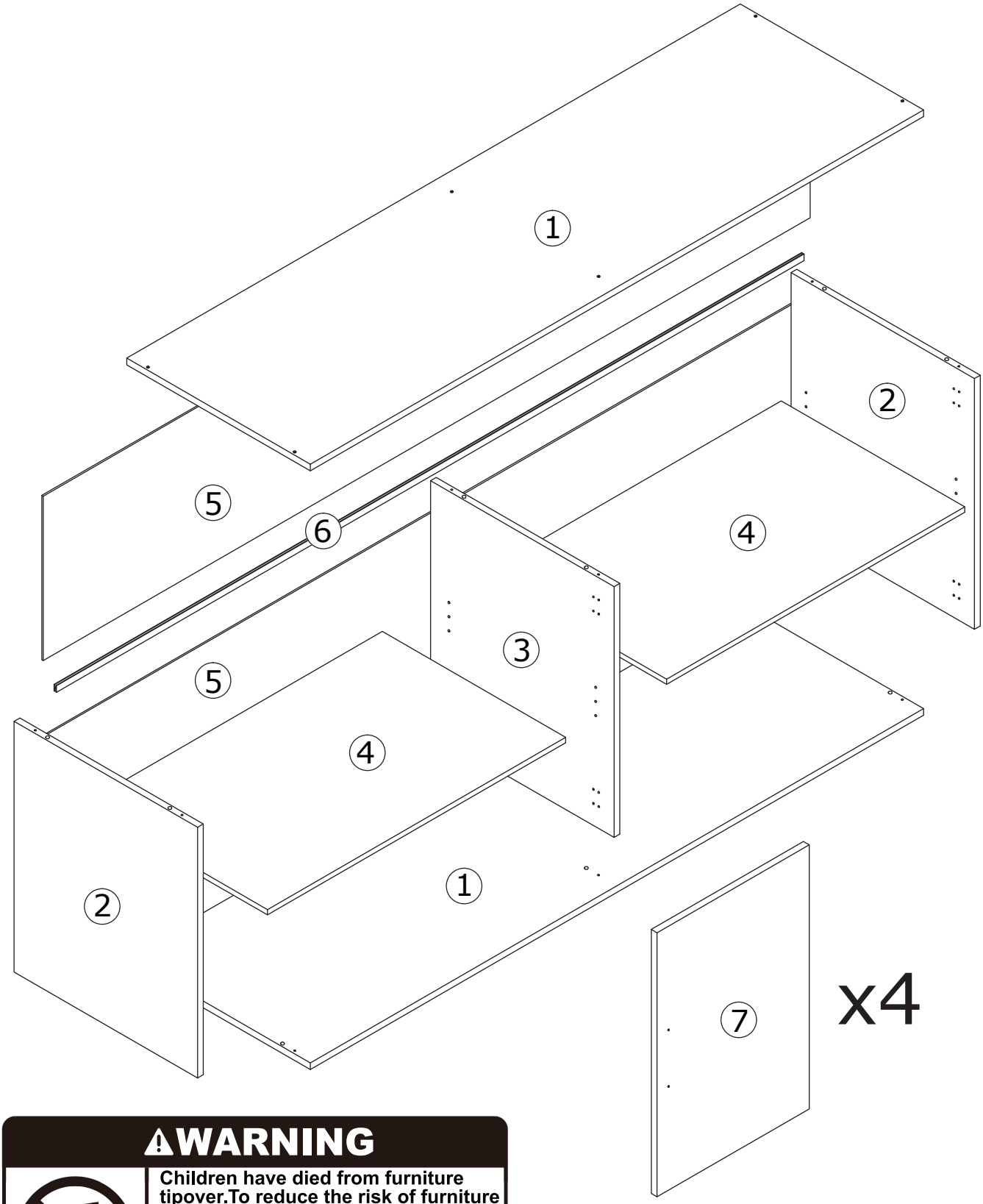

⚠WARNING

Children have died from furniture tipover.To reduce the risk of furniture tipover:

- ALWAYS install Anti-tip device provided.
- NEVER put a TV on this product.
- NEVER allow children to stand,climb or hang on drawers,doors,or shelves.
- NEVER open more than one drawer at a time.
- Place heaviest items in the lowest drawers.

This is a permanent label.
Do not remove!

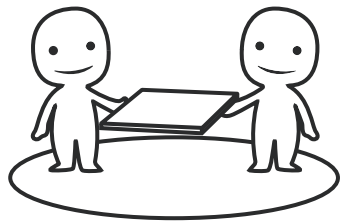

ASSEMBLED BY 2 ADULTS

1

A x 6	B x 6	
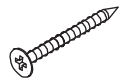	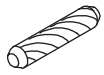	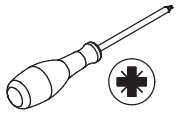
∅4 x 35 mm	∅8 x 30 mm	

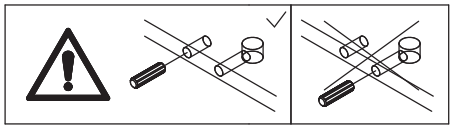

Attach panel 2 and 3 to panel 1 using wooden dowel(B), and fix with screw(A) as shown.

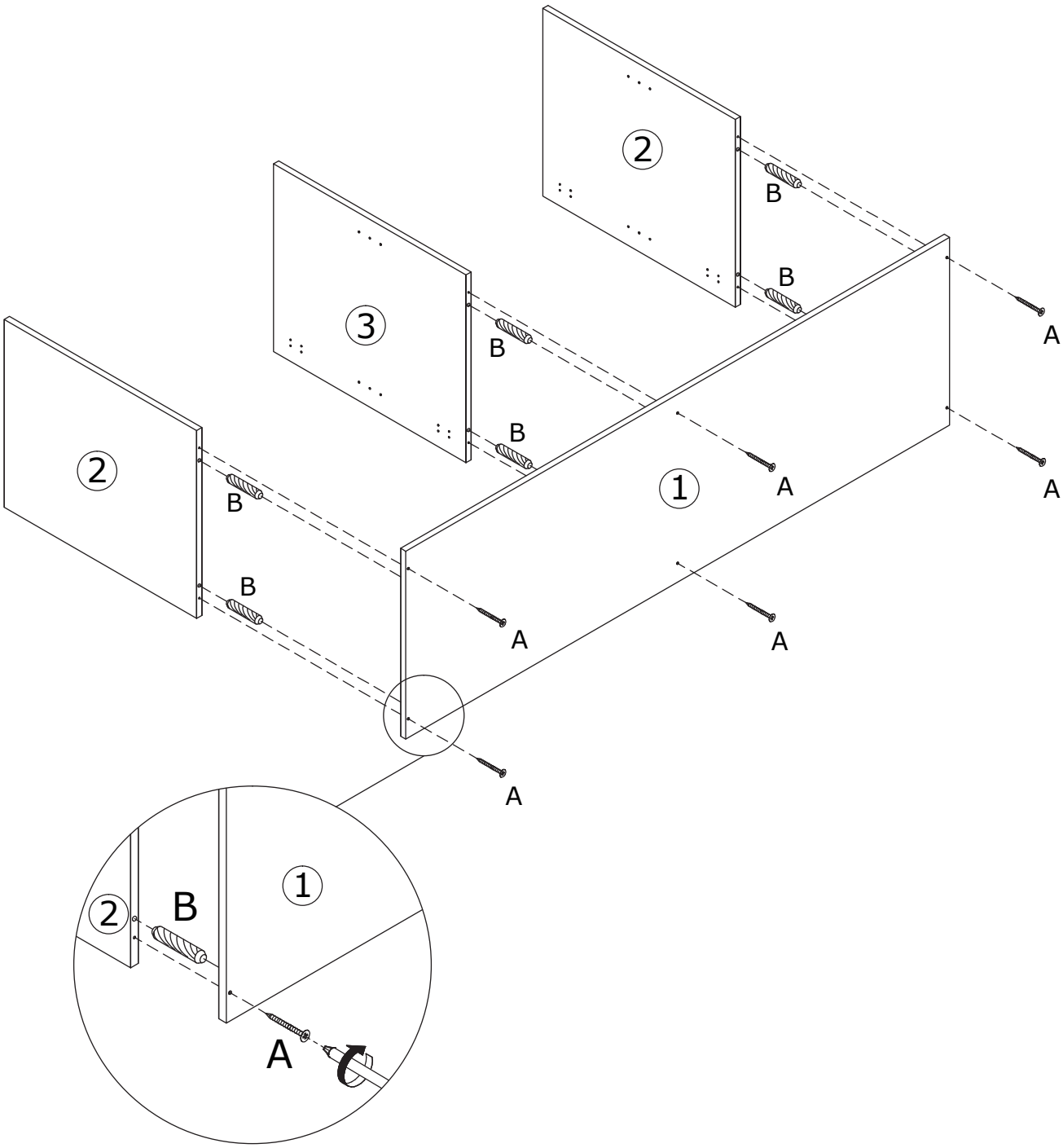

2

A x 6	B x 6	
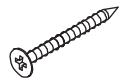	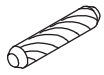	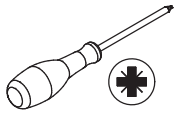
∅4 x 35 mm	∅8 x 30 mm	

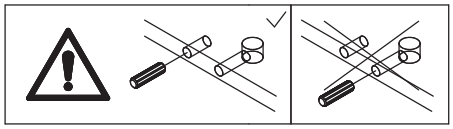

Attach panel 2 and 3 to another panel 1 using wooden dowel(B), and fix with screw(A) as shown.

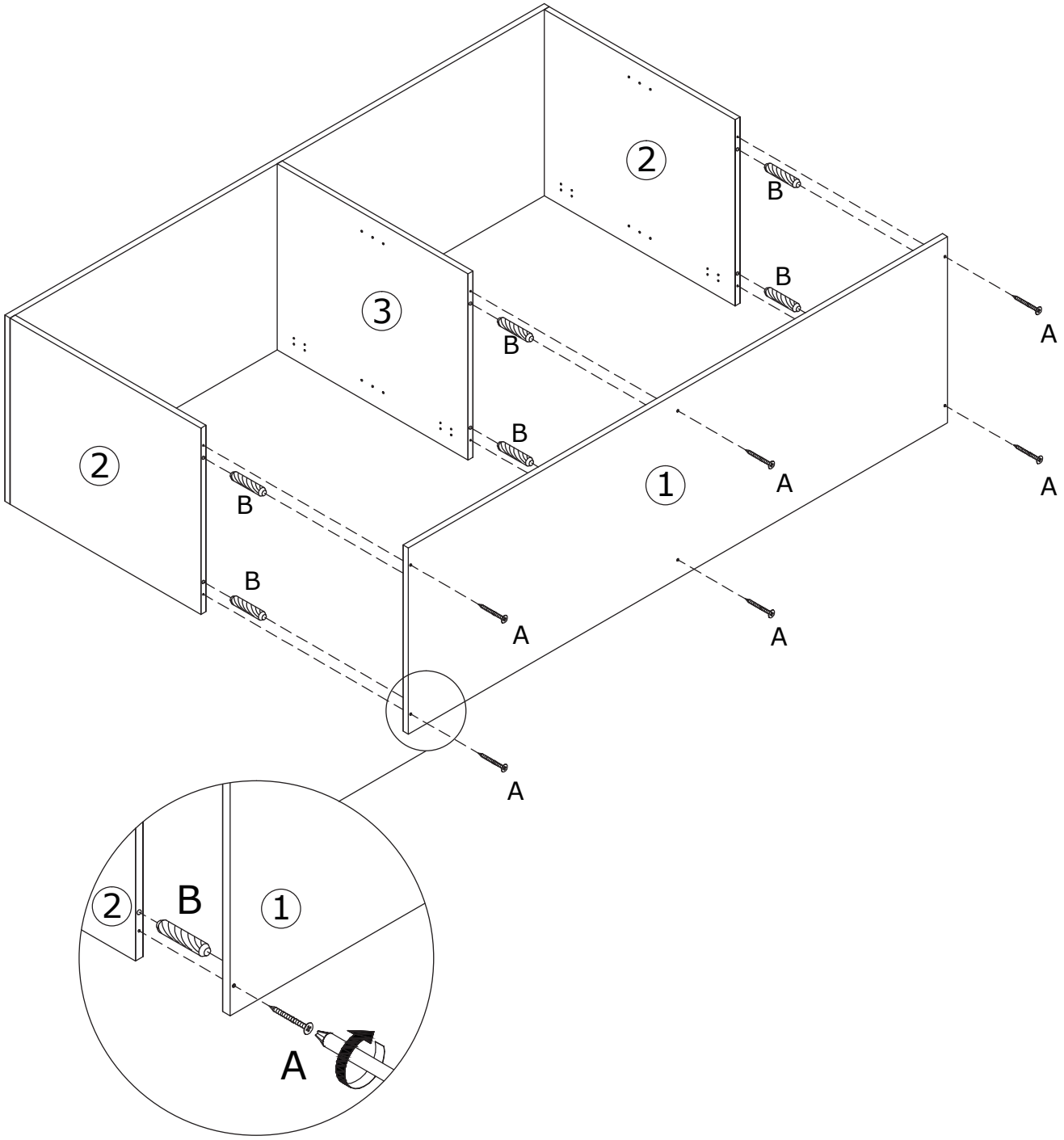

3

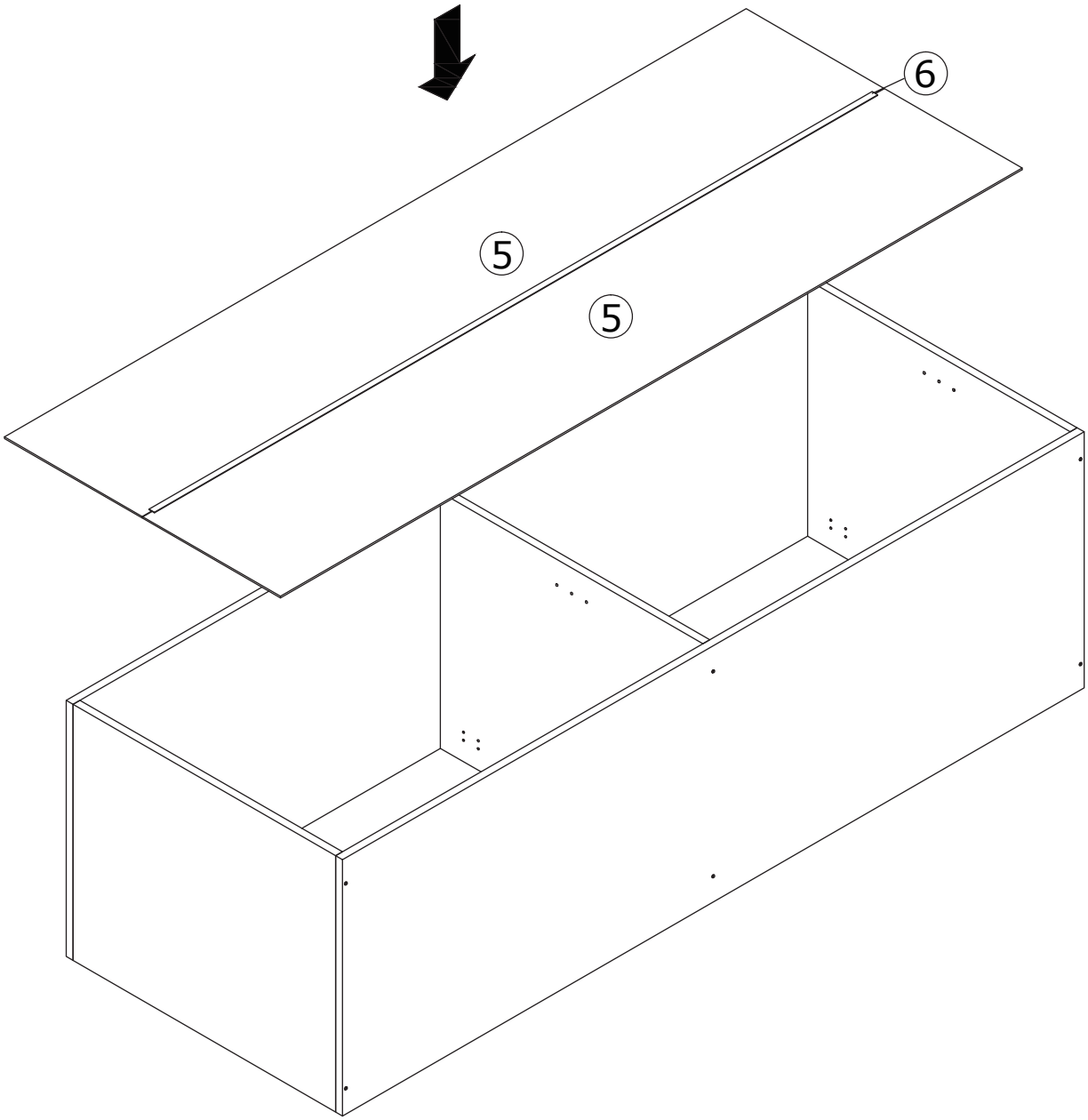

4

C x 24

∅2 x 20 mm

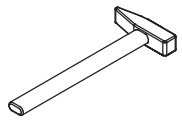

Fix back panel 5 to the unit with nail(C) as shown.

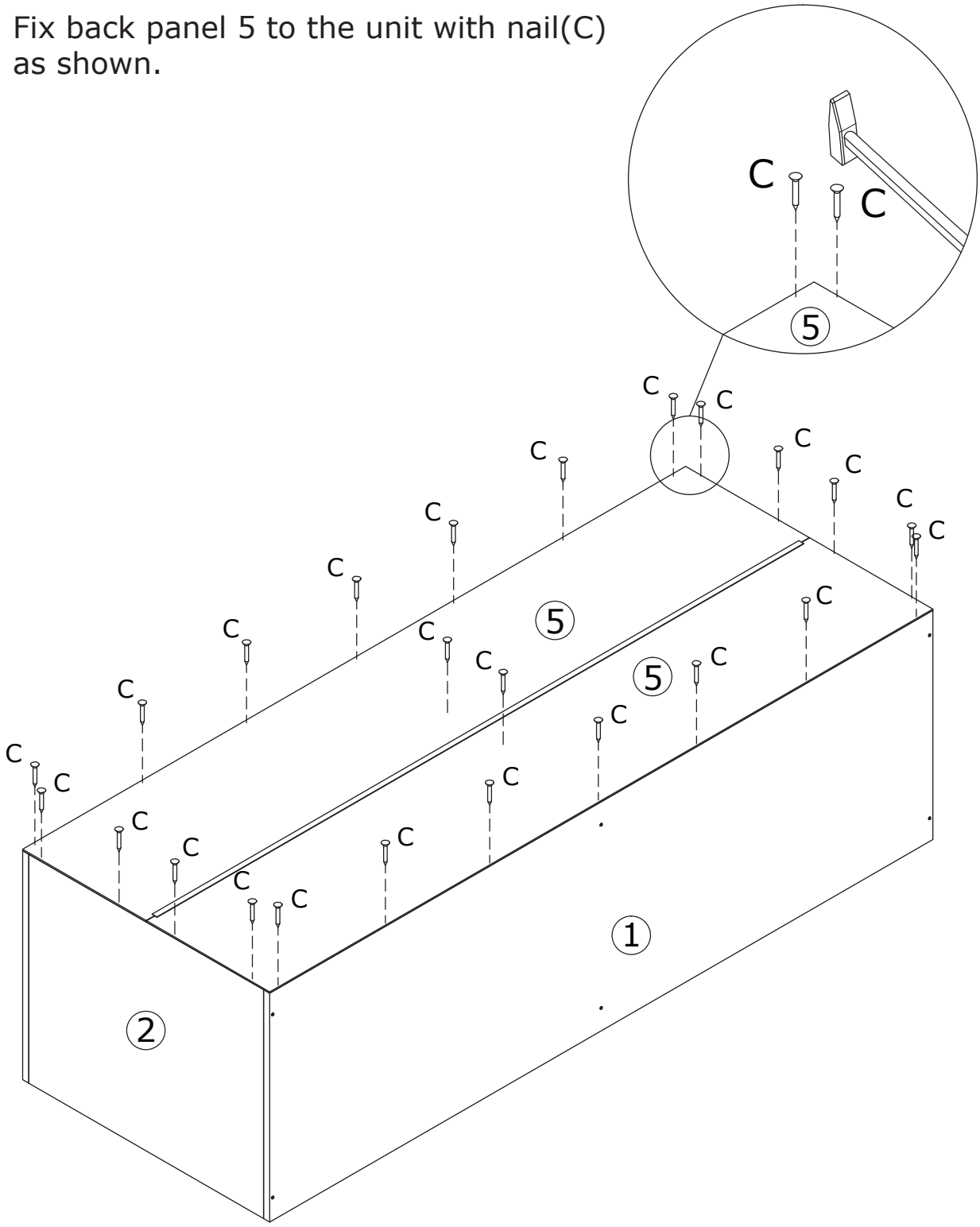

5

D x 8

Insert layer pin(D) into panel 2 and 3, and place shelf panel 4 on as shown.

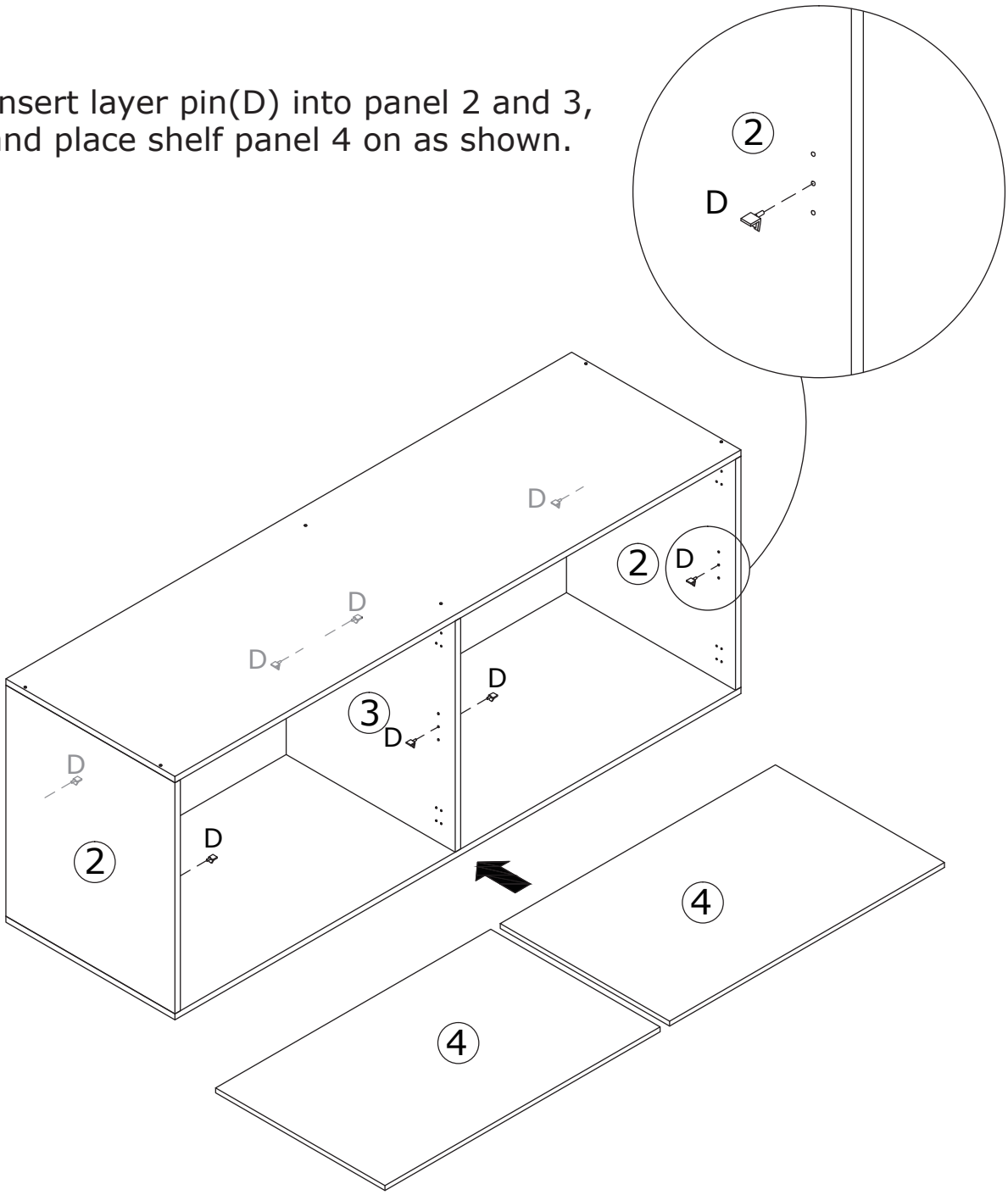

6

E x 8	F x 4	
∅4 x 12 mm	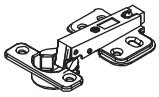	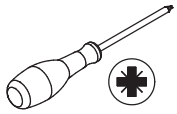

Fix hinge(F) to panel 7 with screw(E) as shown.

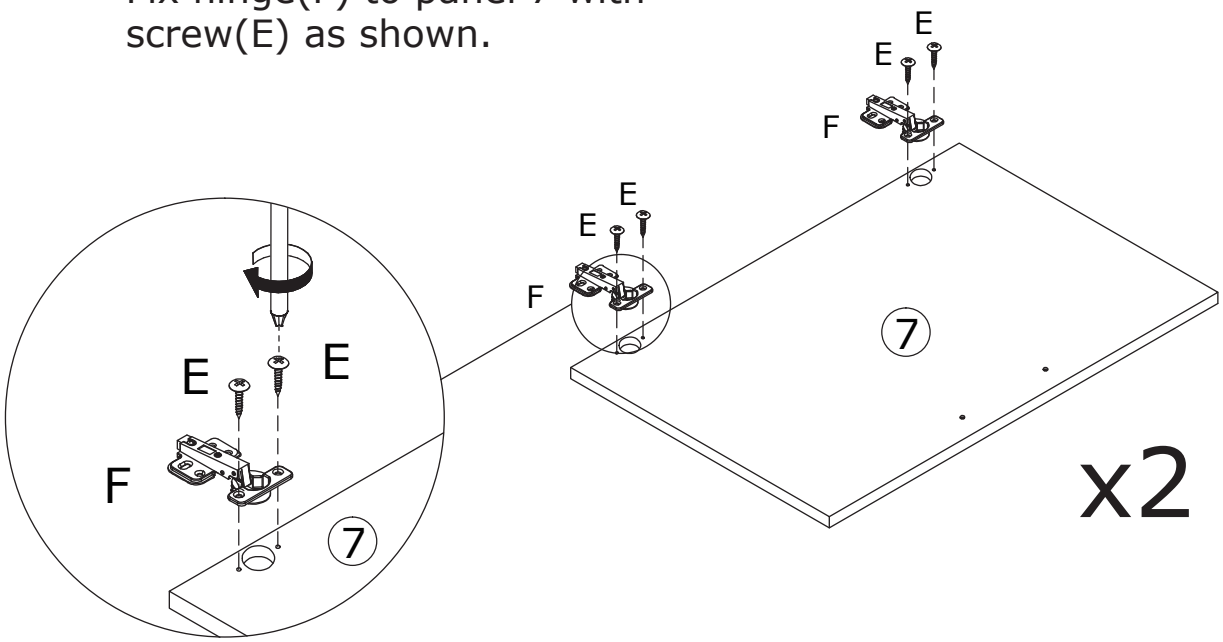

7

H x 2	J x 4	
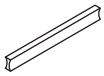	∅4 x 18 mm	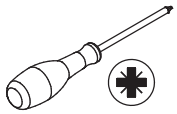

Fix handle(H) to panel 7 with screw(J) as shown.

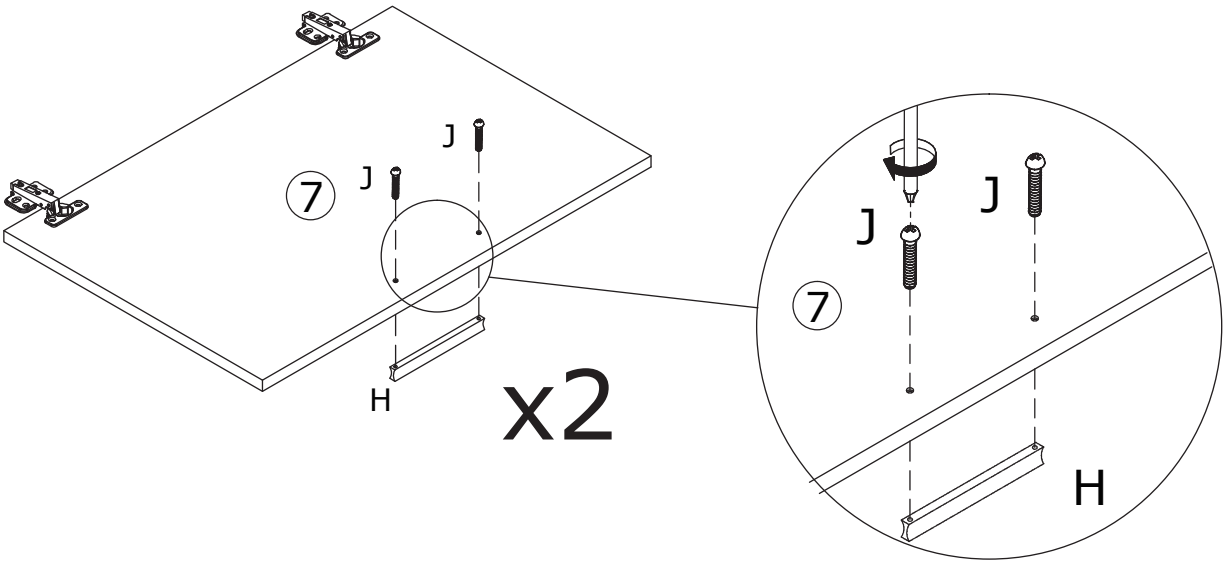

8

E x 16

∅4 x 12 mm

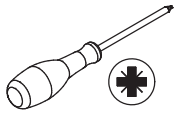

Assemble door 7 to panel 2 by fixing hinge with screw(E) as shown.

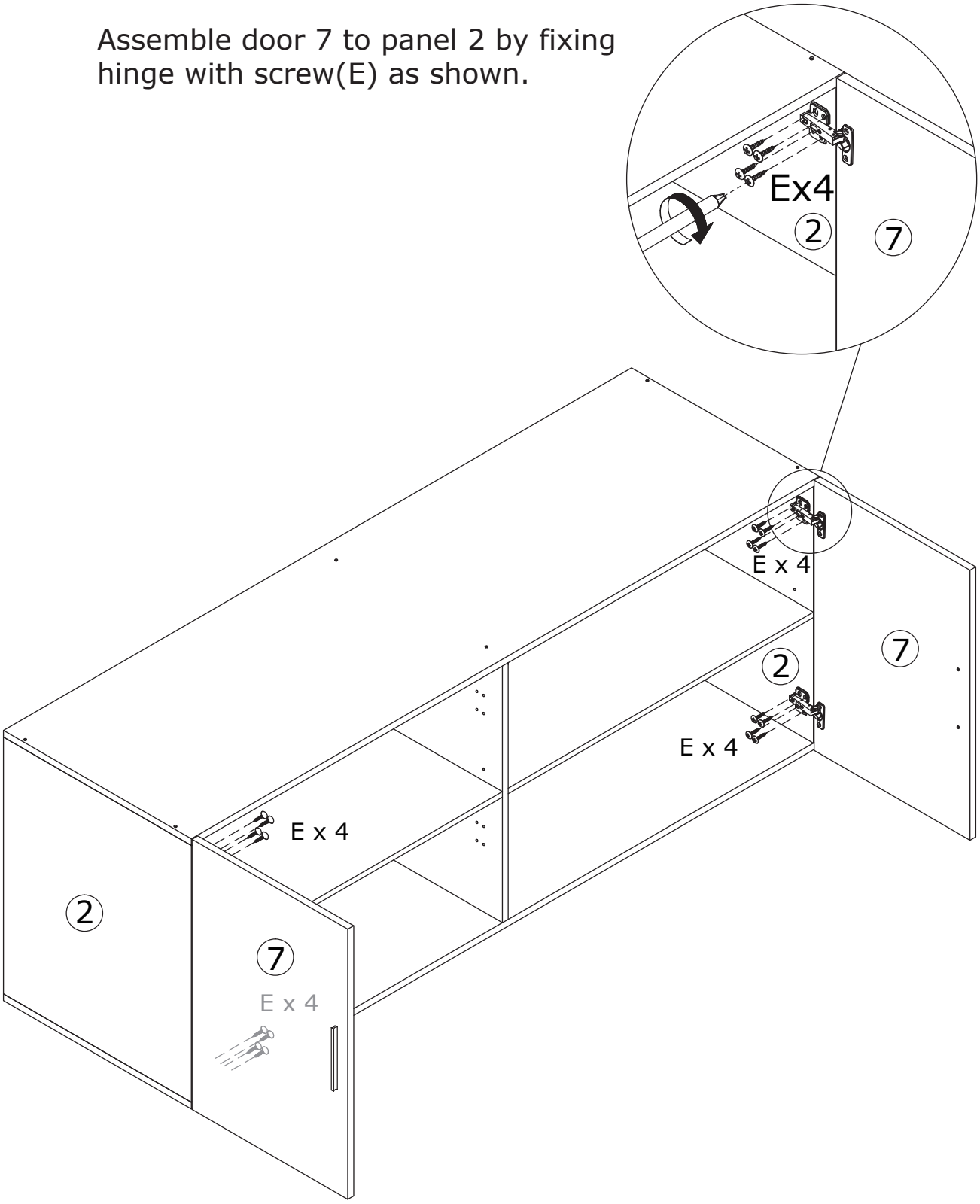

9

E x 8	G x 4	
∅4 x 12 mm		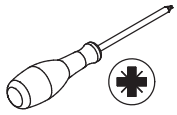

Fix hinge(G) to another panel 7 with screw(E) as shown.

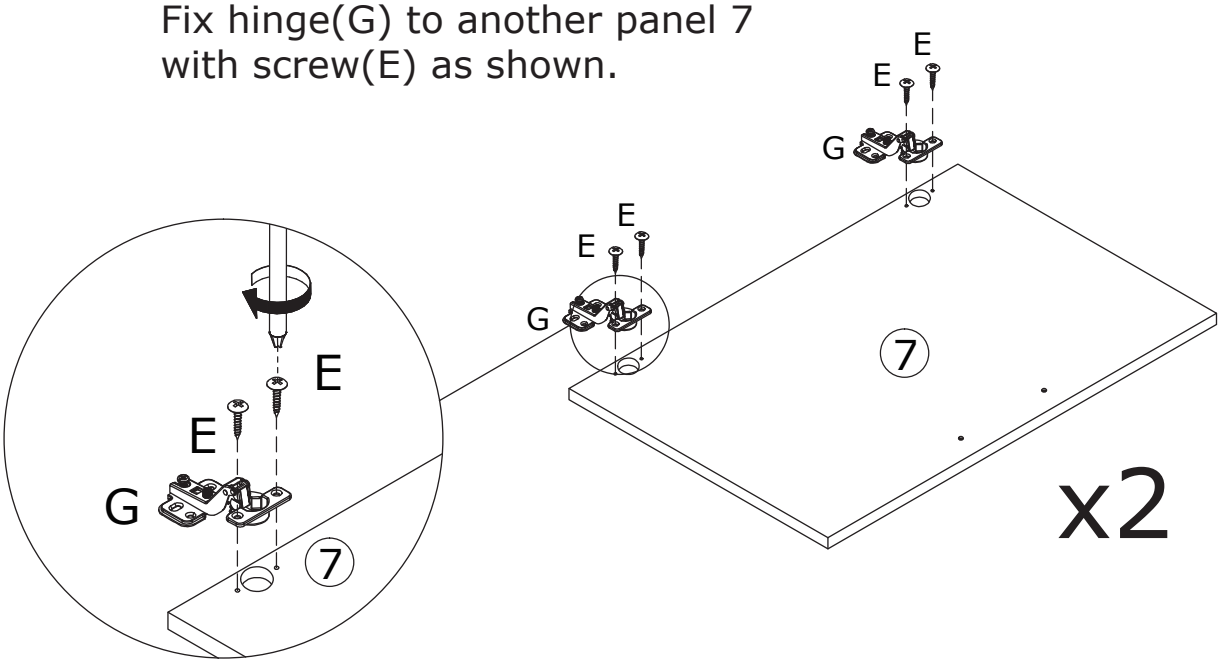

10

H x 2	J x 4	
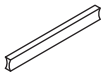	∅4 x 18 mm	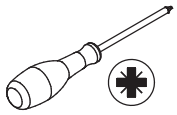

Fix handle(H) to panel 7 with screw(J) as shown.

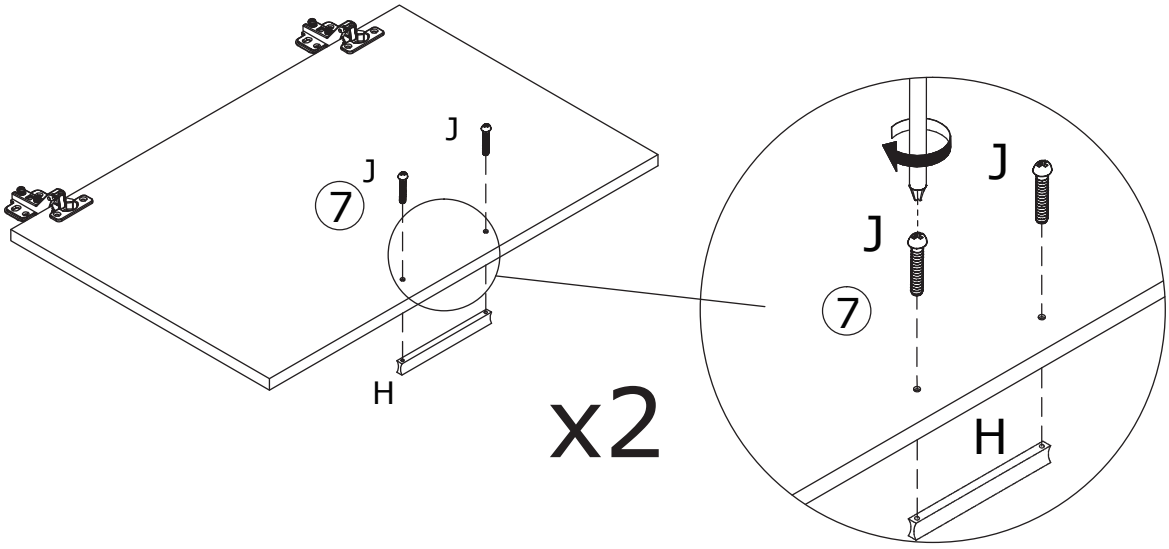

11

E x 16

∅4 x 12 mm

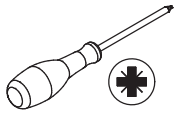

Assemble door 7 to panel 3 by fixing hinge with screw(E) as shown.

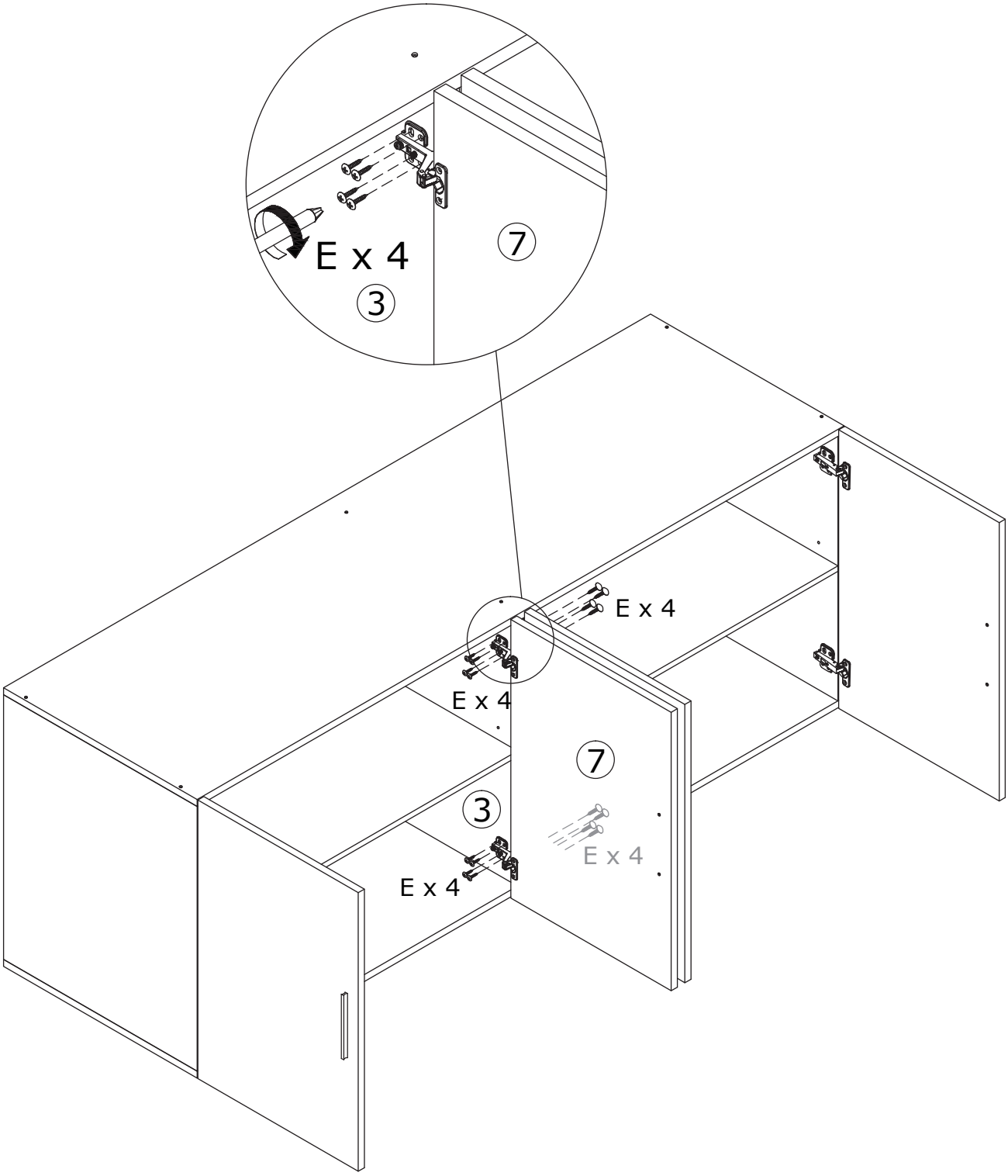

12

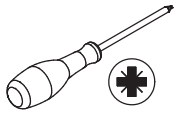

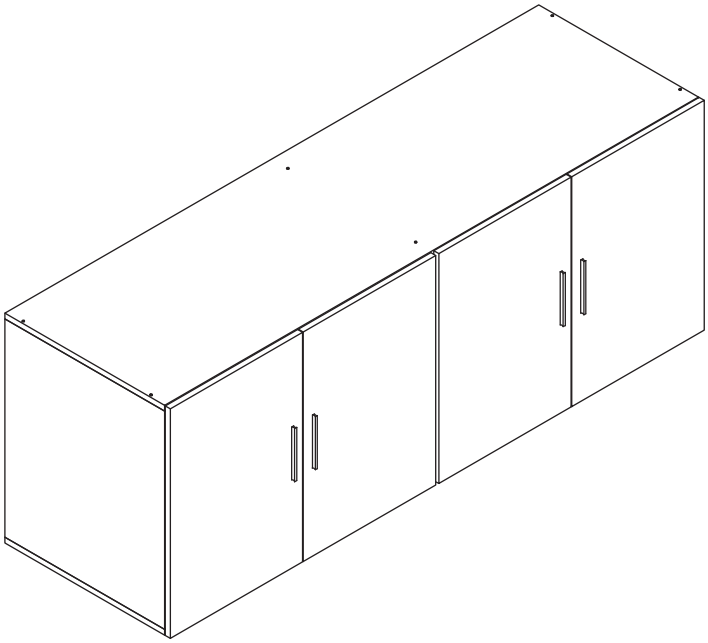

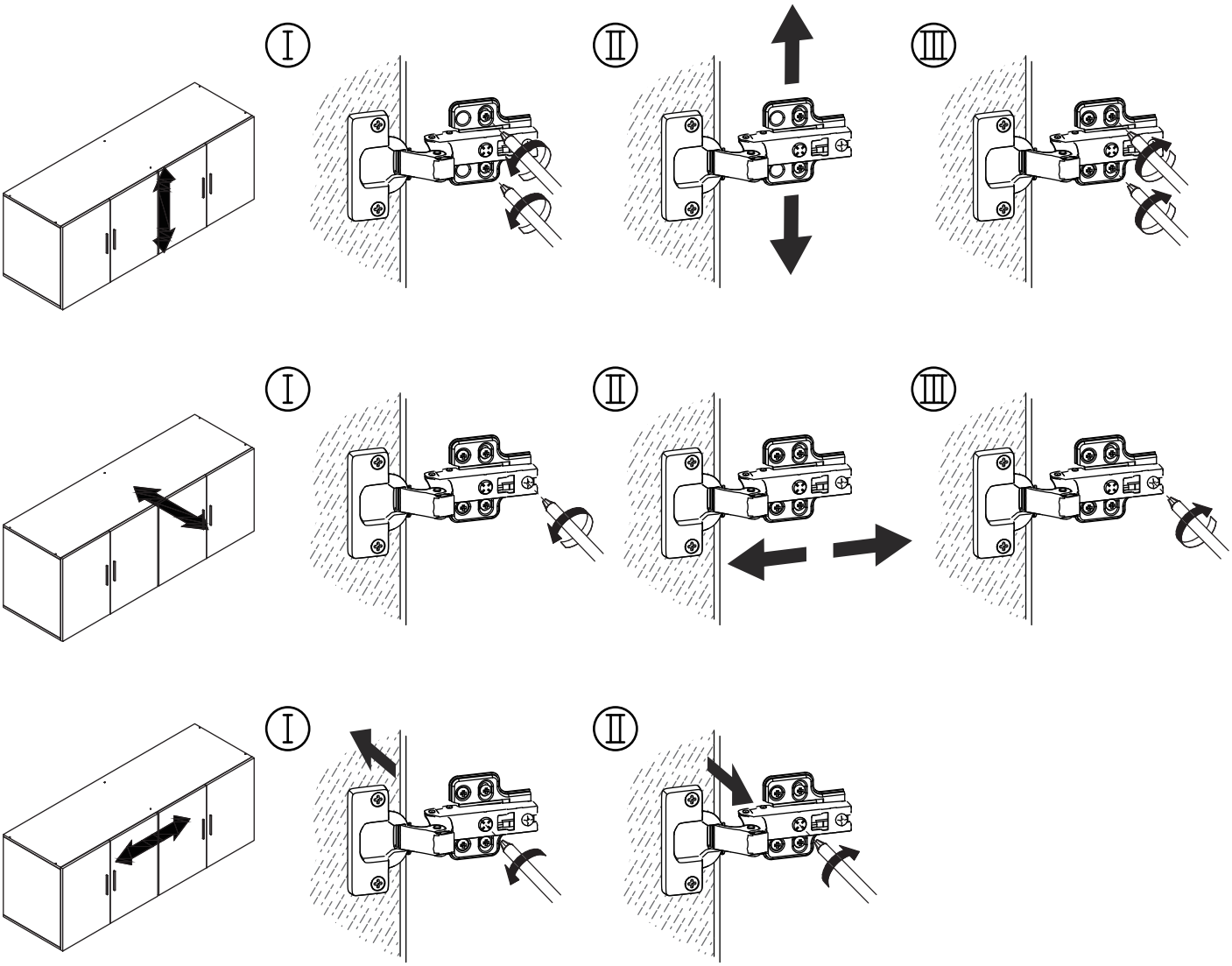

WARRANTY

WARRANTY CLAIMS

•There is a 30-day warranty for broken furniture or any other problems that do not work properly. The warranty will start from the date of purchase which must be verified by proof of purchase.

•Before making a claim, we may be able to answer your query, simply call us. Please leave your purchase order number, along with some details of the problem, if you want a replacement part. We will arrange within 48 hours. If there is out of stock, we will reply with a shipping date.

•The product must be used in accordance with the instructions provided. For health reasons.

•For other reasons, if the furniture needs to be returned, it must be cleaned and dried and operated within 30 days of receipt.

Type of Warranty Claim

•Failure to follow the furniture instructions will invalidate the warranty. Attention please.

•Does not include damage during installation, but includes damage during transportation.

Scope of responsibility

•Shall not bear any responsibility for misuse or user damage and / or loss of parts during the installation of furniture.

•After using, the damage and scratches of the furniture are not covered by the warranty.

The Warranty Relates to All Bought in The Us and Covers The Following Areas

•Sheet parts: 1 month from the date of purchase.

•Electrical parts: 1 month from the date of purchase.

RETURNS

CHANGED YOUR MIND AND NEED TO RETURN YOU ITEM?

PLEASE FOLLOW THE BELOW INSTRUCTIONS:

- If you have purchased and have simply changed your mind, follow the retailer's instructions for returns.

DEFECTIVE ITEMS

- If your item is defective in any way, i.e. it doesn't work but you can't identify why, in the first instance, please call us.

DAMAGED ITEMS

- If you receive an order with obvious shipping damage from the retailer, then we suggest the delivery is refused. If the delivery has been accepted and then shipping damage is found, please follow the specific instructions advised by the retailer.
  In all circumstances please save all packaging material and paperwork for the order. Please be aware that if you dispose of packaging material or attempt to return the merchandise without contacting the fulfiller, you jeopardise your chances of making a claim, and you may not receive a credit for the return.

AFTER-SALES CONTACT

feedbackstation@163.com

(303)800-6387

INSTALLATION
Product Manual

Version: 330124-00-24A-SCX

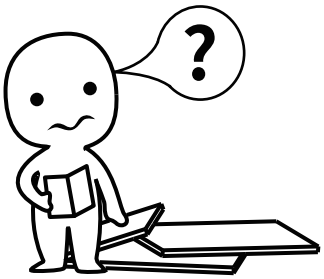

IMPORTANT INFORMATION!

please read the entire manual before starting to assemble and/or using this product.follow the manual thoroughly and keep it for further reference.

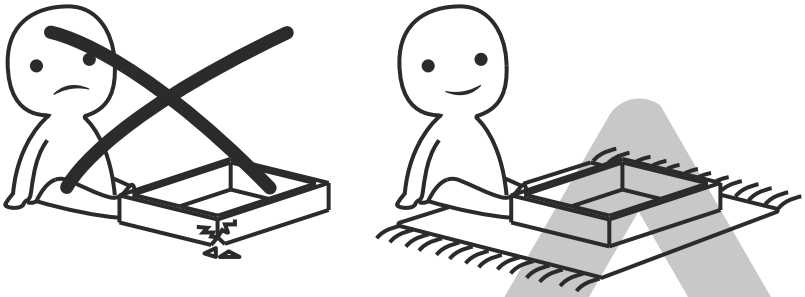

AVOID SCRATCHES!

In order to avoid scratching this furnuture should be assembled on a soft layer-could be a rug.

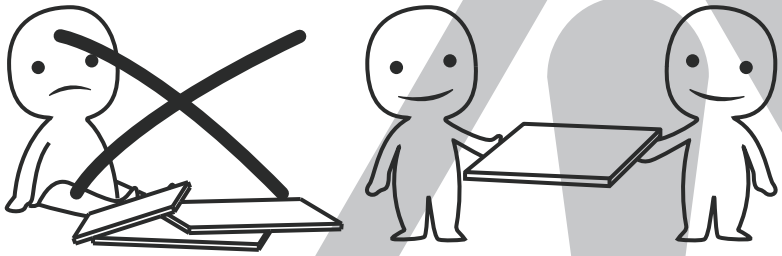

IMPROVE EFFICIENCY !

Try to find a partner to install with you, which can speed up the installation efficiency and shorten the time.

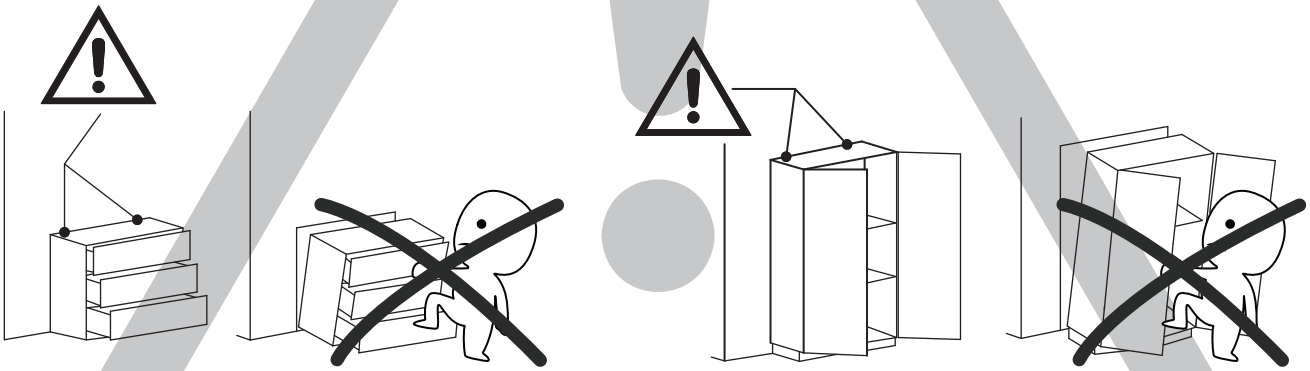

ANTI-TOPPLE WARNING !

Overturned furniture can cause serious or fatal crush injuries. To prevent tipping over, be sure to use the wall attachment, if not included with this product. Please purchase the wall attachment that fit your wall. If unsure, seek professional advice. Please read and follow each step of the instructions carefully.

IMPORTANT !

It is important that any product which is assembled using any kind of screw is re-tightened 2 weeks after assembly,and once every 3 months - in order to assure stability through-out the lifespan of the product.

For regular maintenance and cleaning of the product, for the frame, please use a rag dipped in neutral detergent to fully wipe it, and then dry it with a clean rag.For glass materials, wipe with a rag dampened with water glass cleaner, and then dry with a dry rag.

Do not use an electric screwdriver, and do not use too much force when installing, because the board is easy to break.

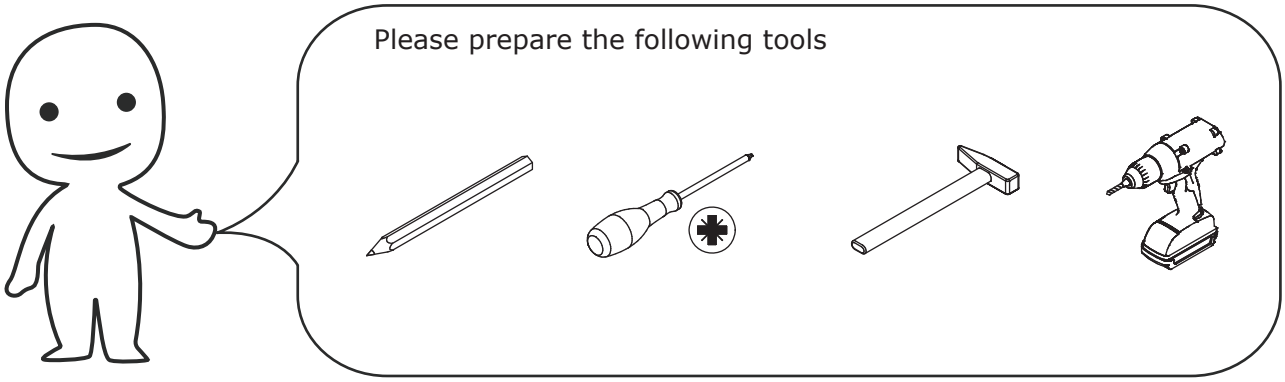

When installing, please carefully confirm whether each screw corresponds to the manual, accessories with similar shapes can be distinguished by size

A x 8	B x 8	C x 56+1	D x 42+1	E x 52+1
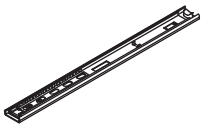 L = 350 mm	L = 350 mm	∅3 x 12 mm	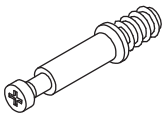 ∅6 x 35 mm	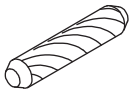 ∅8 x 30 mm

F x 42+1	G x 4	H x 2	J x 30+1	K x 32+1
∅15 x 10 mm	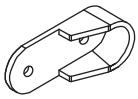	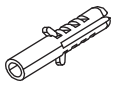	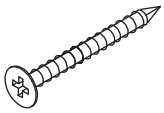 ∅4 x 35 mm	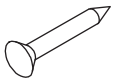 ∅2 x 20 mm

L x 6	M x 6	N x 76+1	P x 4	Q x 12+1
	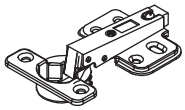	∅4 x 12 mm	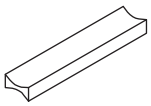	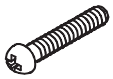 ∅4 x 16 mm

R x 8	S x 2	T x 4	U x 2
	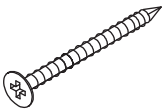 ∅4 x 40 mm	∅4 x 10 mm	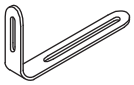

① 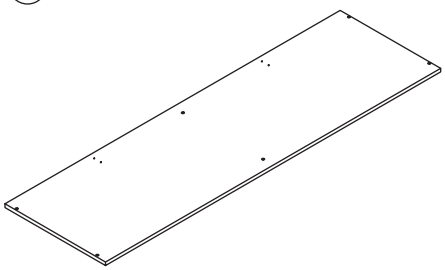 1PC	② 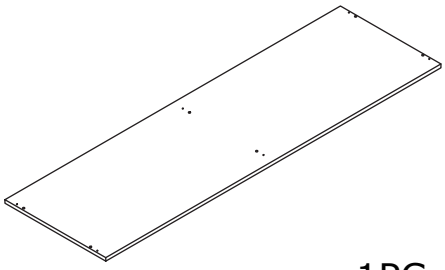 1PC	③ 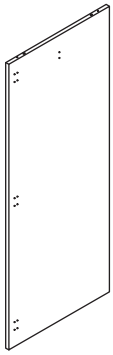 1PC
④ 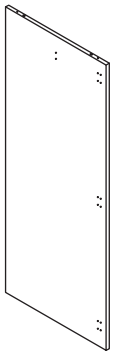 1PC	⑤ 1PC	⑥ 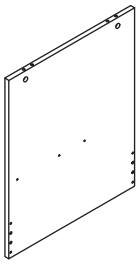 1PC
⑦ 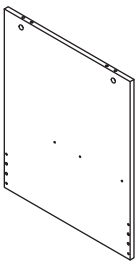 1PC	⑧ 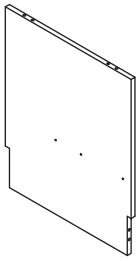 1PC	⑨ 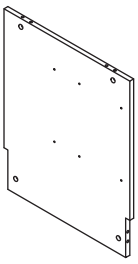 1PC
⑩ 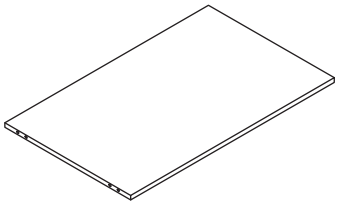 1PC	⑪ 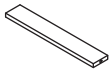 2PCS	⑫ 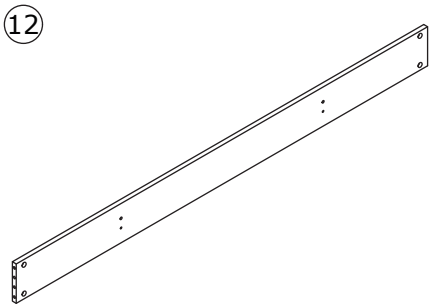 2PCS
⑬ 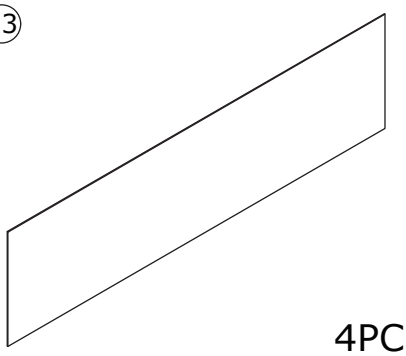 4PCS	⑭ 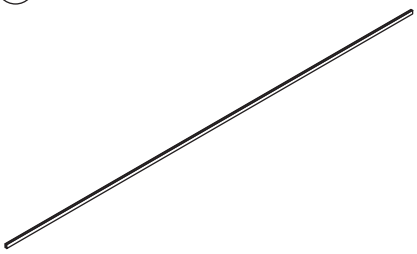 3PCS	⑮ 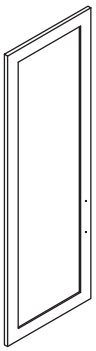 2PCS

⑯ 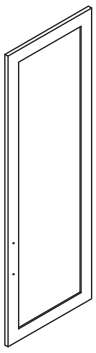 2PCS	⑰ 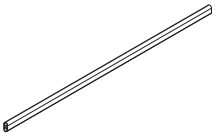 2PCS	⑱ 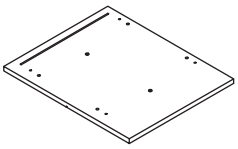 1PC
⑲ 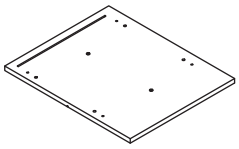 1PC	⑳ 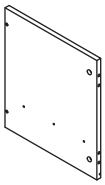 2PCS	㉑ 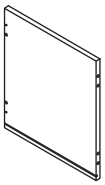 2PCS
㉒ 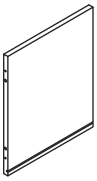 2PCS	㉓ 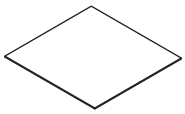 2PCS	㉔ 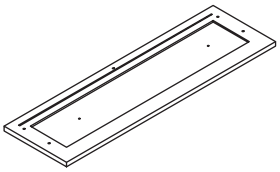 2PCS
㉕ 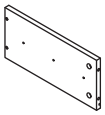 2PCS	㉖ 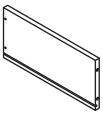 2PCS	㉗ 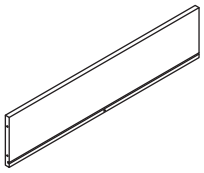 2PCS
㉘ 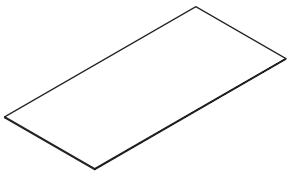 2PCS		

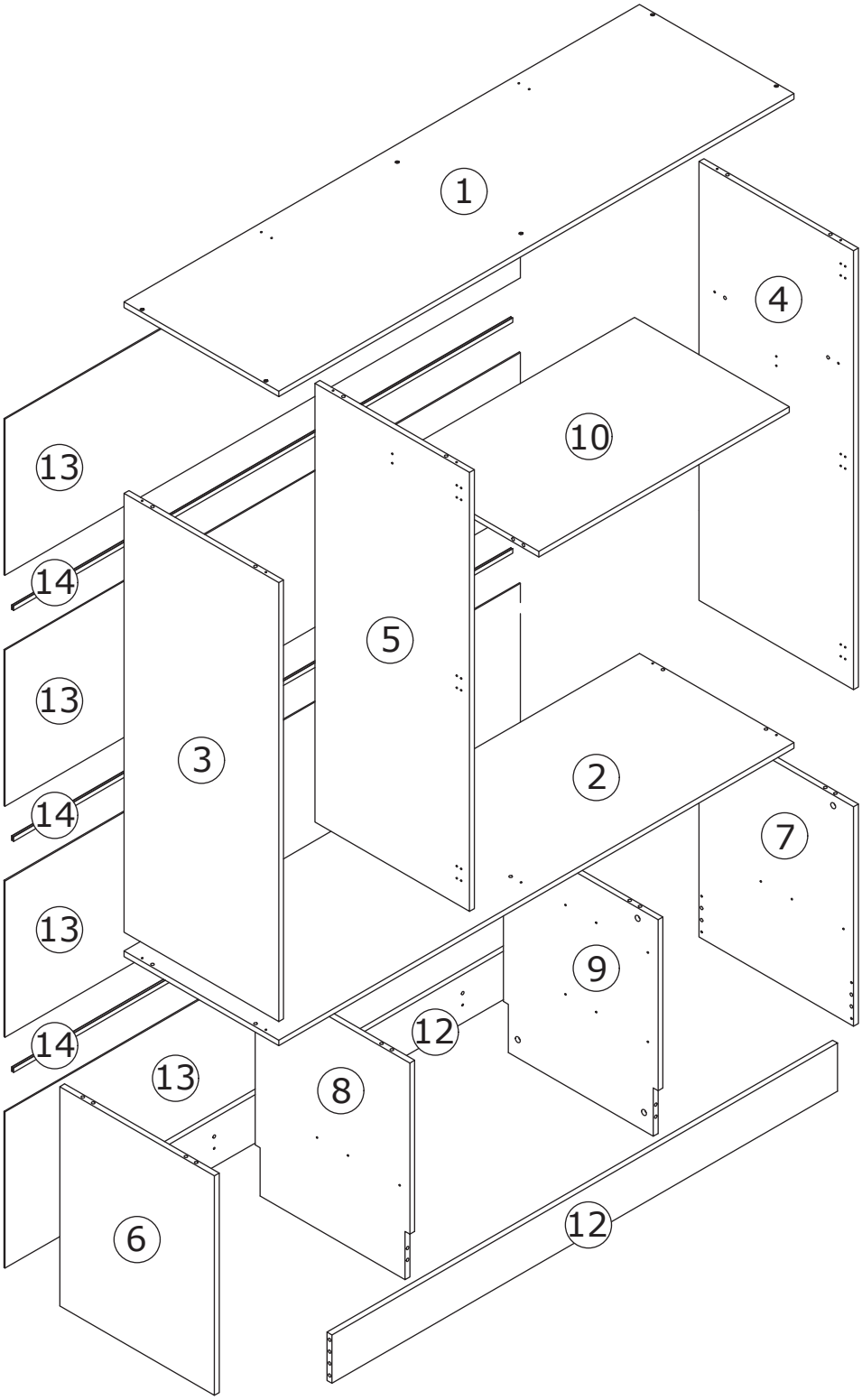

⚠WARNING

Children have died from furniture tipover.To reduce the risk of furniture tipover:

- ALWAYS install Anti-tip device provided.
- NEVER put a TV on this product.
- NEVER allow children to stand,climb or hang on drawers,doors,or shelves.
- NEVER open more than one drawer at a time.
- Place heaviest items in the lowest drawers.

This is a permanent label.
Do not remove!

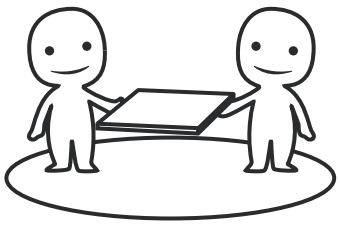

ASSEMBLED BY 2 ADULTS

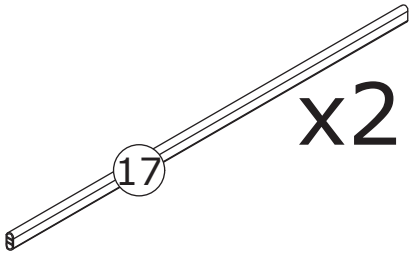

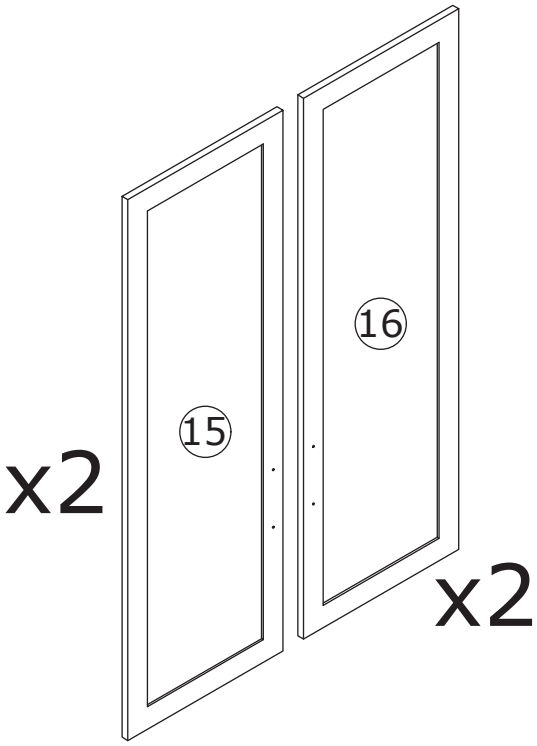

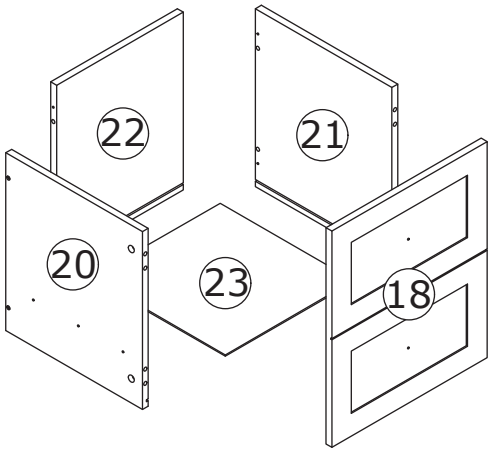

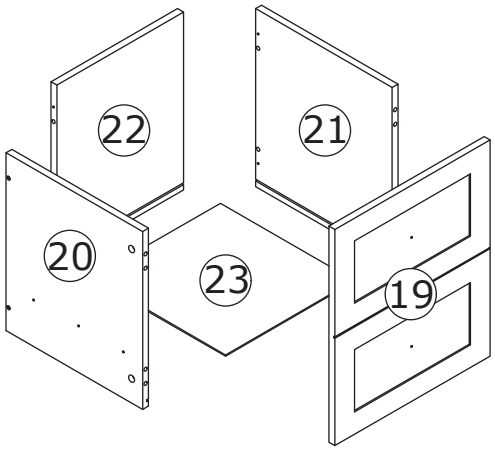

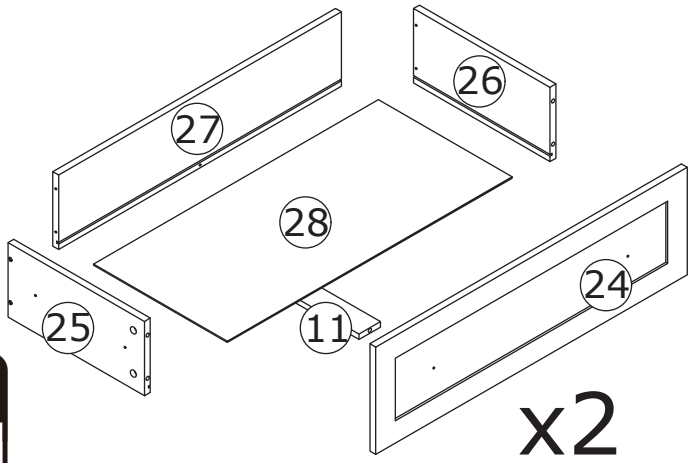

⚠WARNING

Children have died from furniture tipover.To reduce the risk of furniture tipover:

- ALWAYS install Anti-tip device provided.
- NEVER put a TV on this product.
- NEVER allow children to stand,climb or hang on drawers,doors,or shelves.
- NEVER open more than one drawer at a time.
- Place heaviest items in the lowest drawers.

This is a permanent label.
Do not remove!

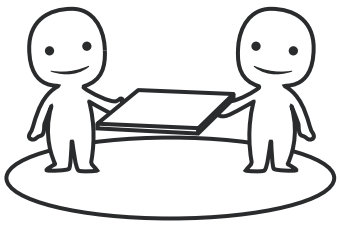

ASSEMBLED BY 2 ADULTS

1

Slides Must Be Separated Before Assembly.
After Separated, Set Aside Until Needed for Assembly.

Las diapositivas deben separarse antes del montaje.
Después de la separación, déjelo a un lado hasta que sea necesario.

Les glissières doivent être séparées avant l'assemblage.
Après la séparation, mettez de côté jusqu'au moment de l'assemblage.

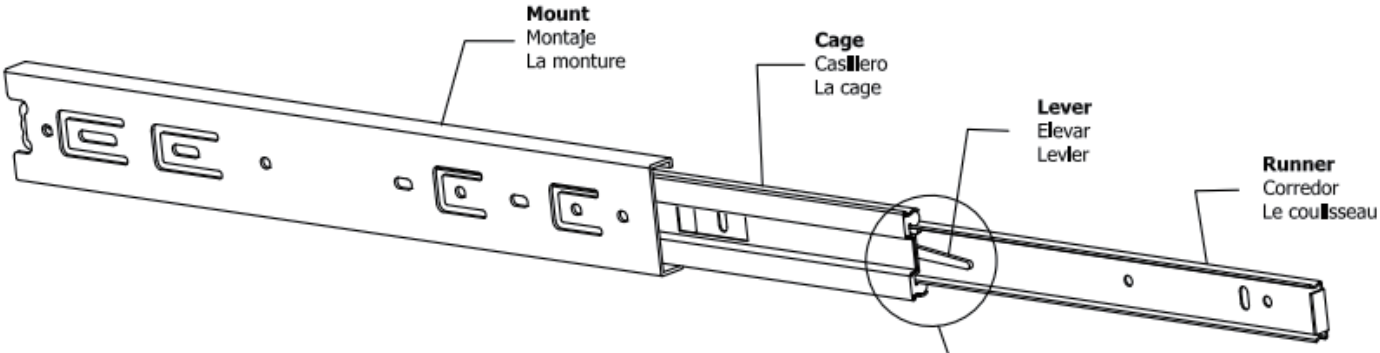

STEP 1: Extend Slide
Extender la diapositiva
Extendre la diapositive

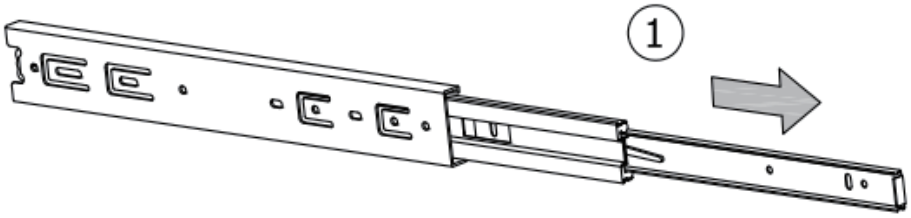

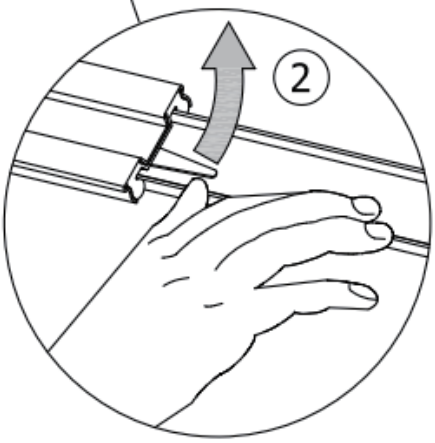

STEP 2: Push Lever UP
Empujar hacia arriba
Lever le levier

STEP 3: Remove Runner
Quitar el corredor
Enlever le coureur

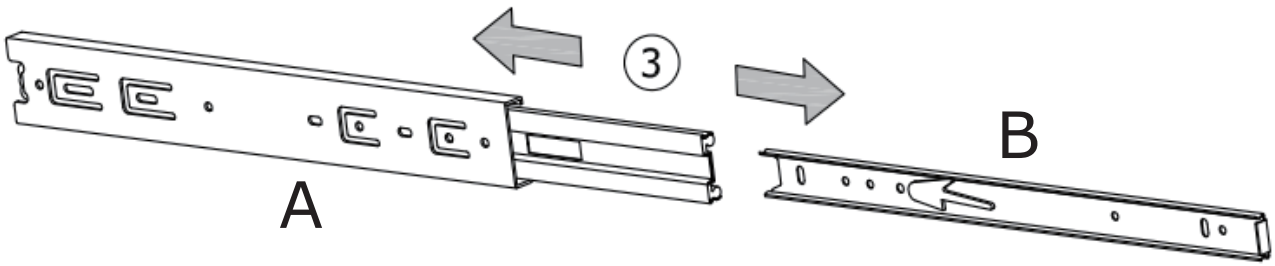

2

A x 2	C x 6	
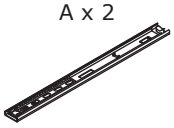 L = 350 mm	∅3 x 12 mm	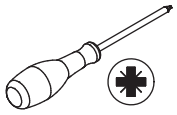

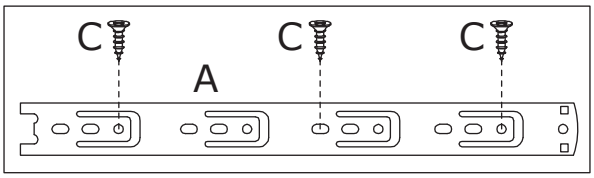

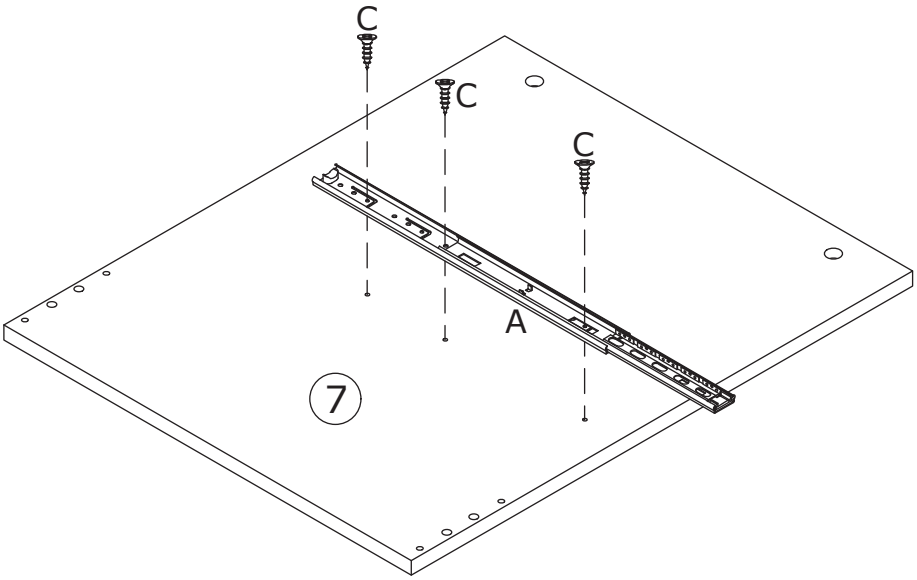

Fix rail(A) to board 6 and 7 with screw(C) as shown.

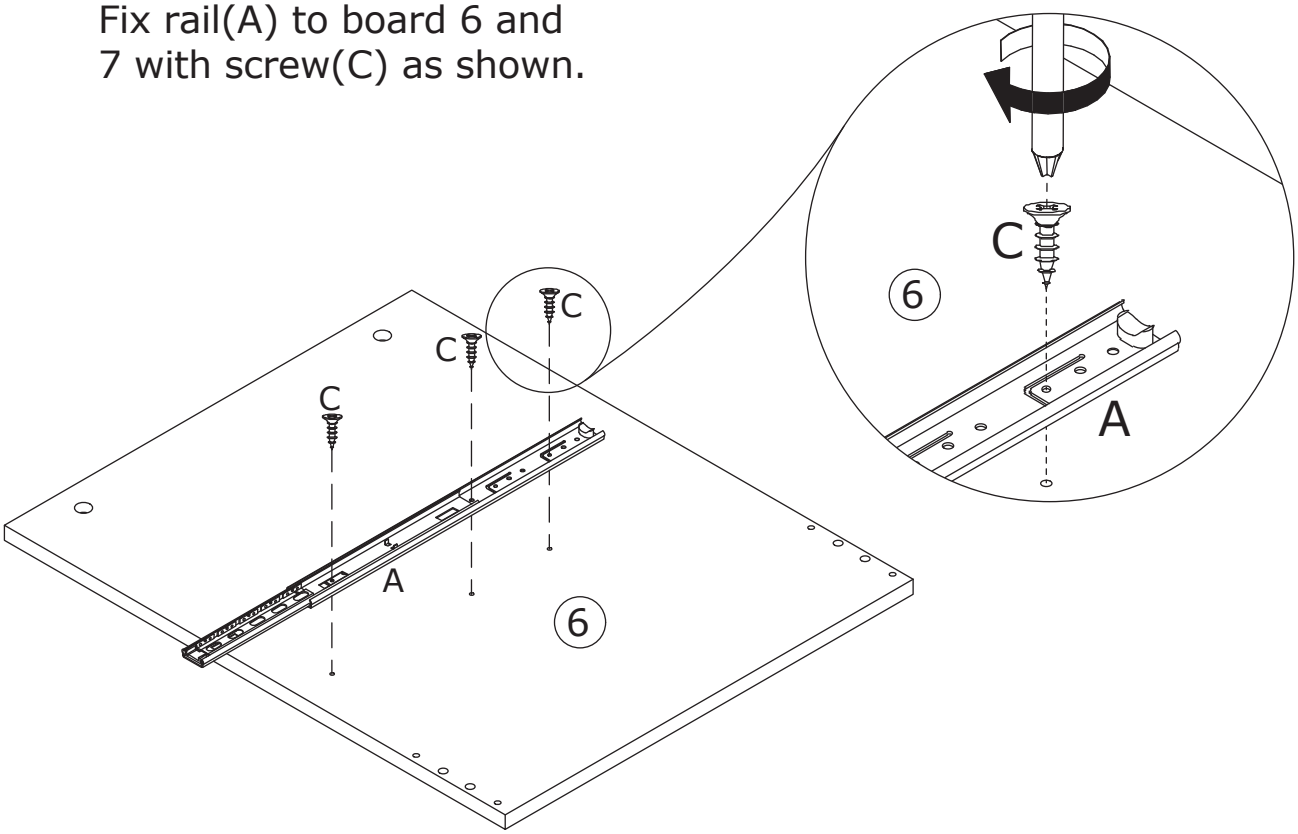

3

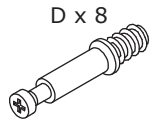

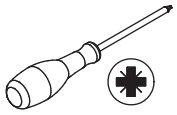

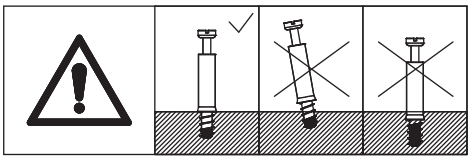

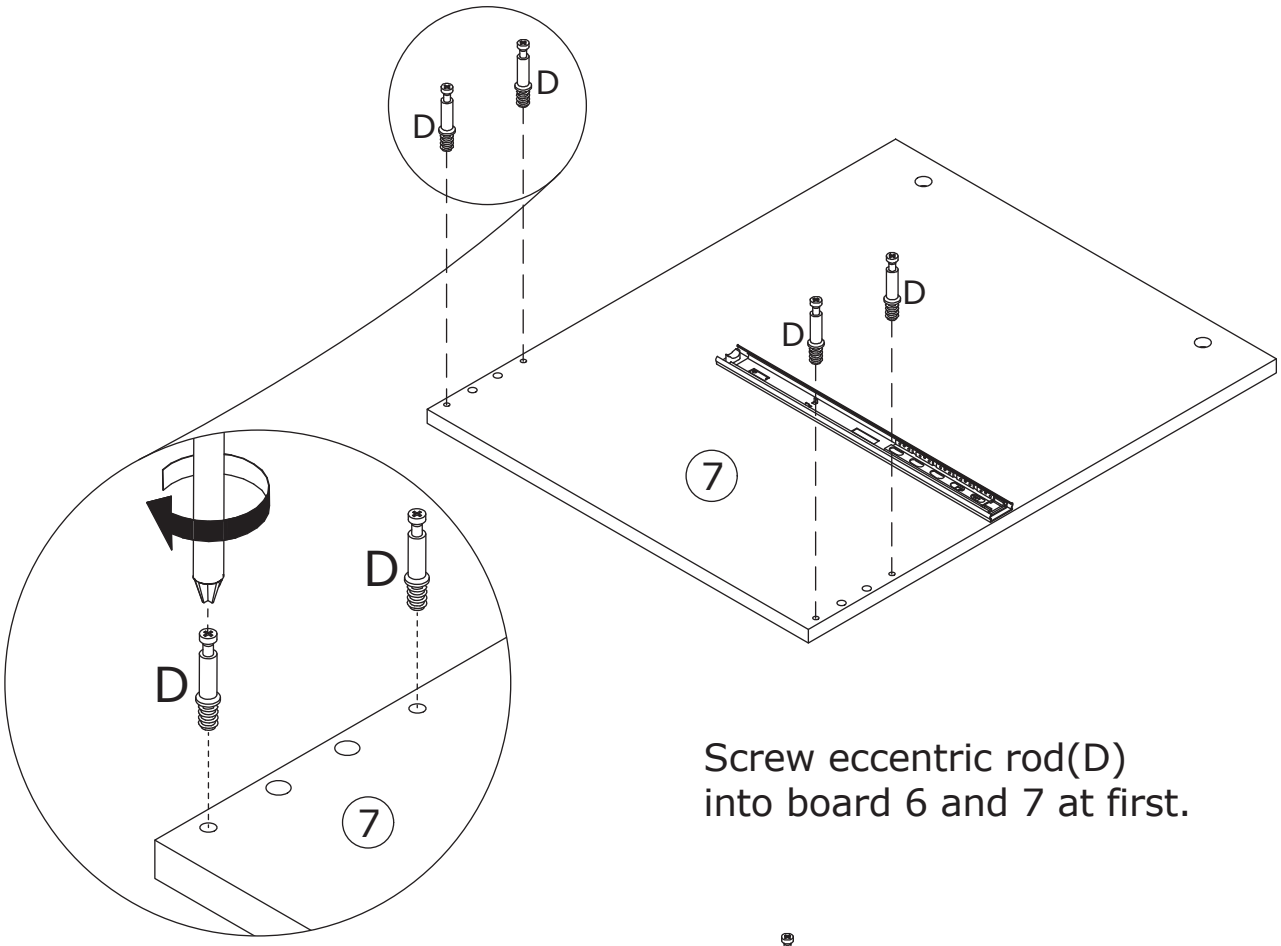

Screw eccentric rod(D)
into board 6 and 7 at first.

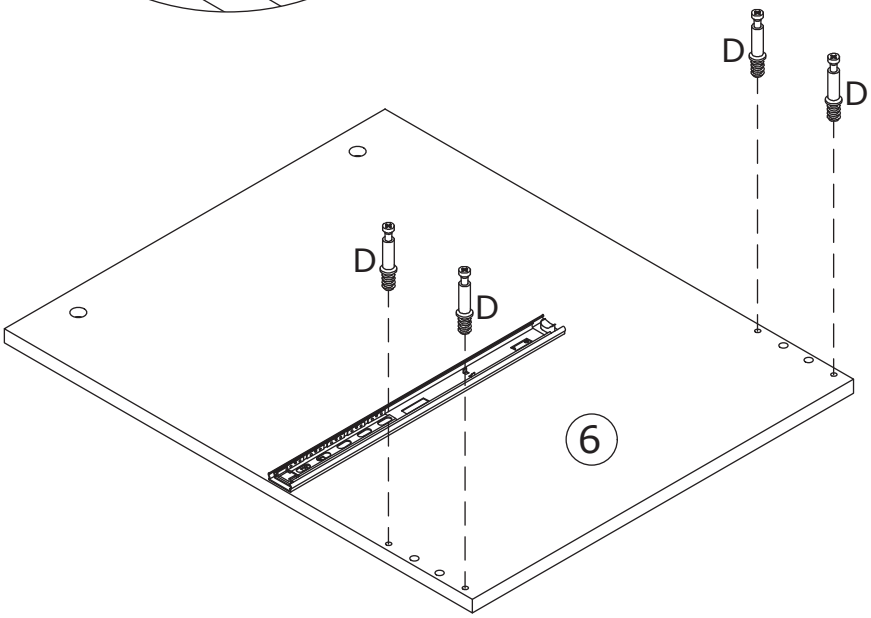

4

A x 3	C x 9	
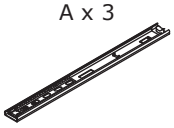 L = 350 mm	∅3 x 12 mm	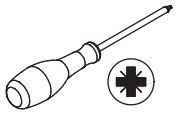

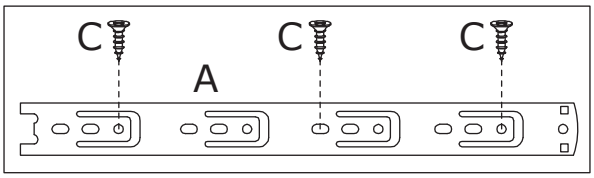

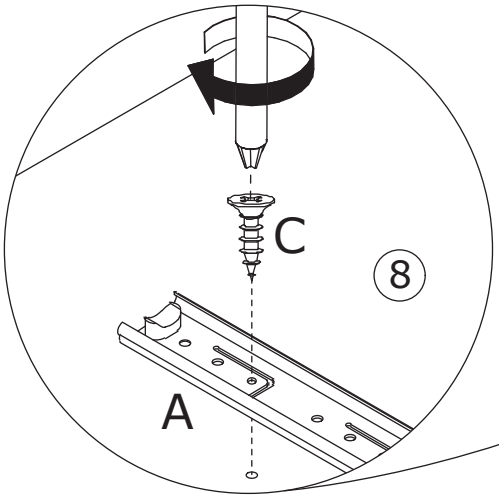

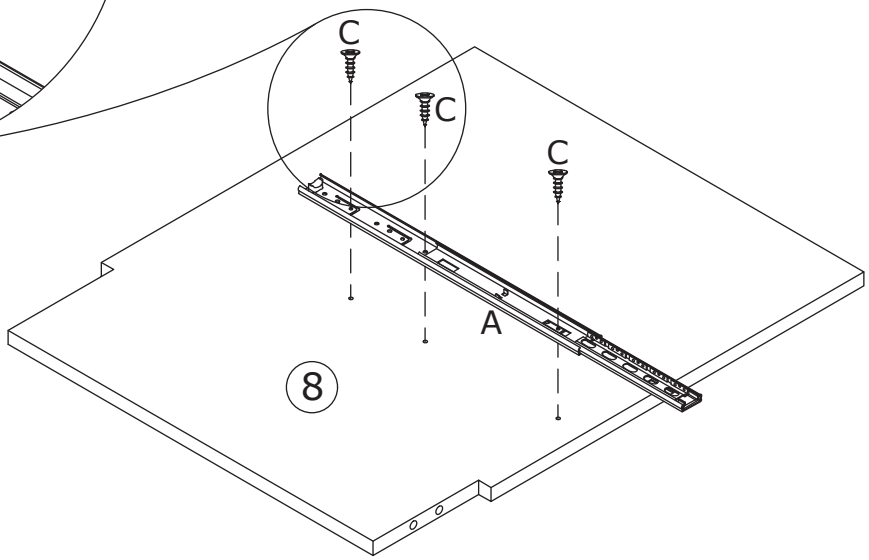

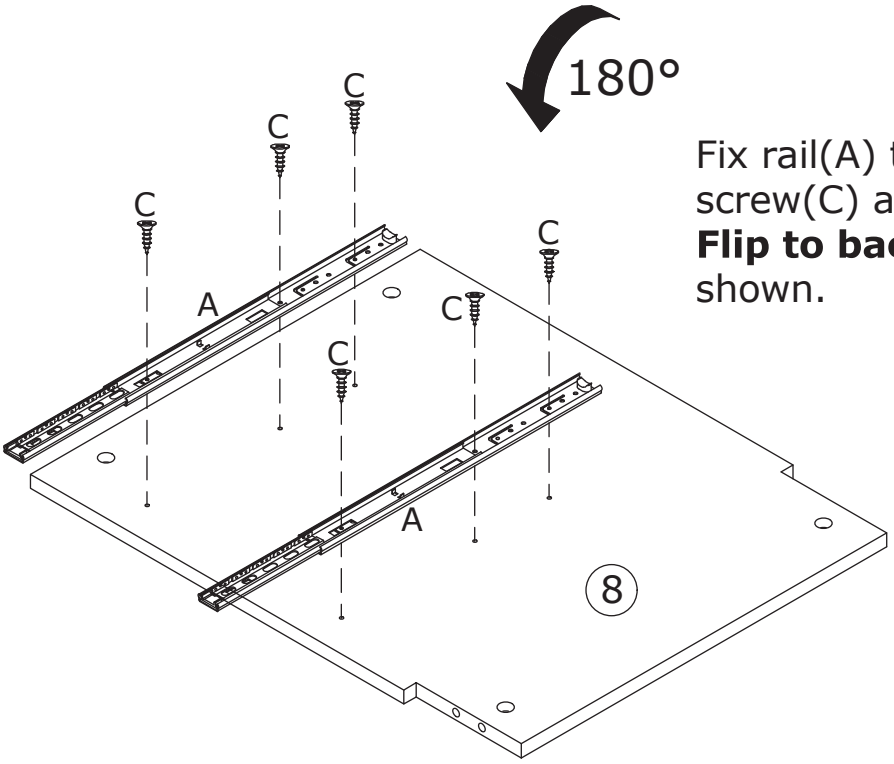

Fix rail(A) to board 8 with screw(C) at first.
Flip to back, fix rail(A) as shown.

5

A x 3	C x 9	
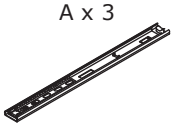 L = 350 mm	∅3 x 12 mm	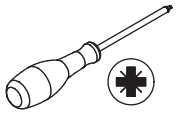

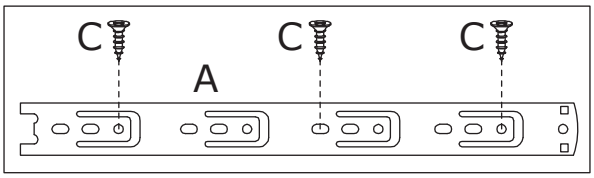

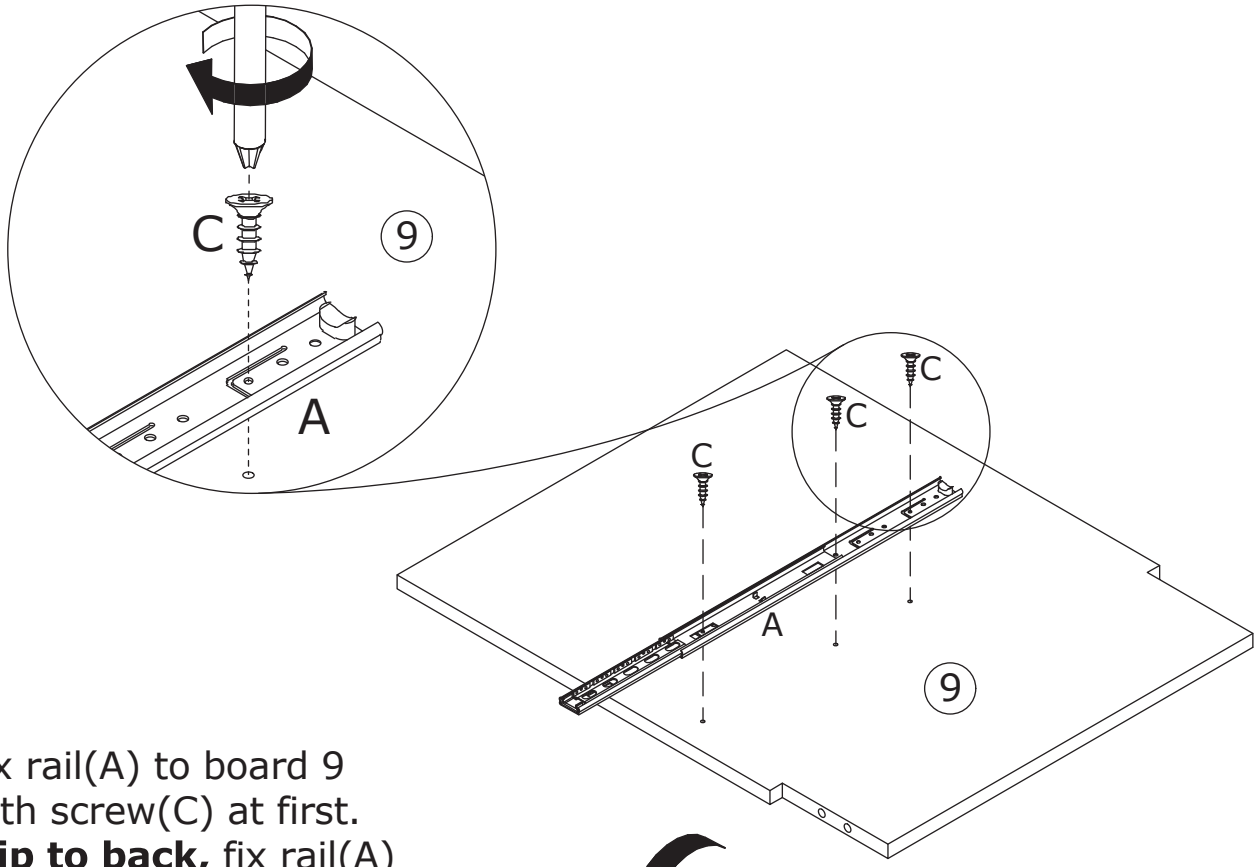

Fix rail(A) to board 9 with screw(C) at first. **Flip to back,** fix rail(A) as shown.

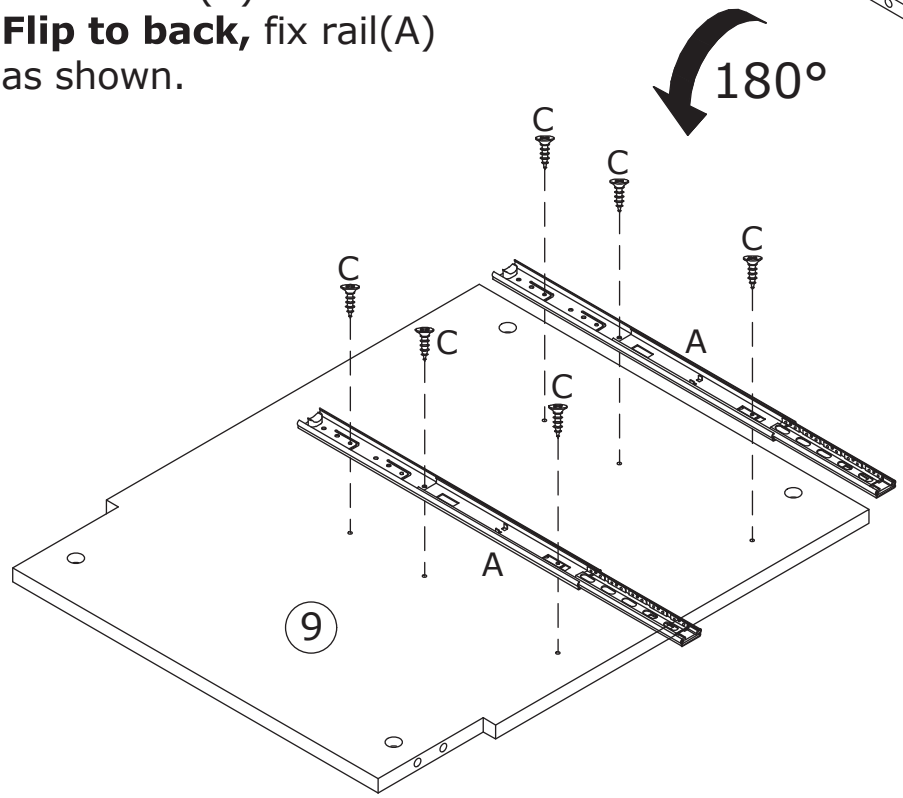

6

Screw eccentric rod(D) into board 12 at first.

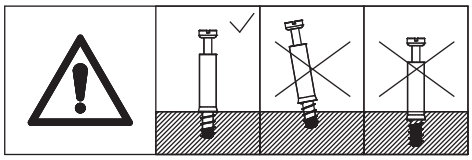

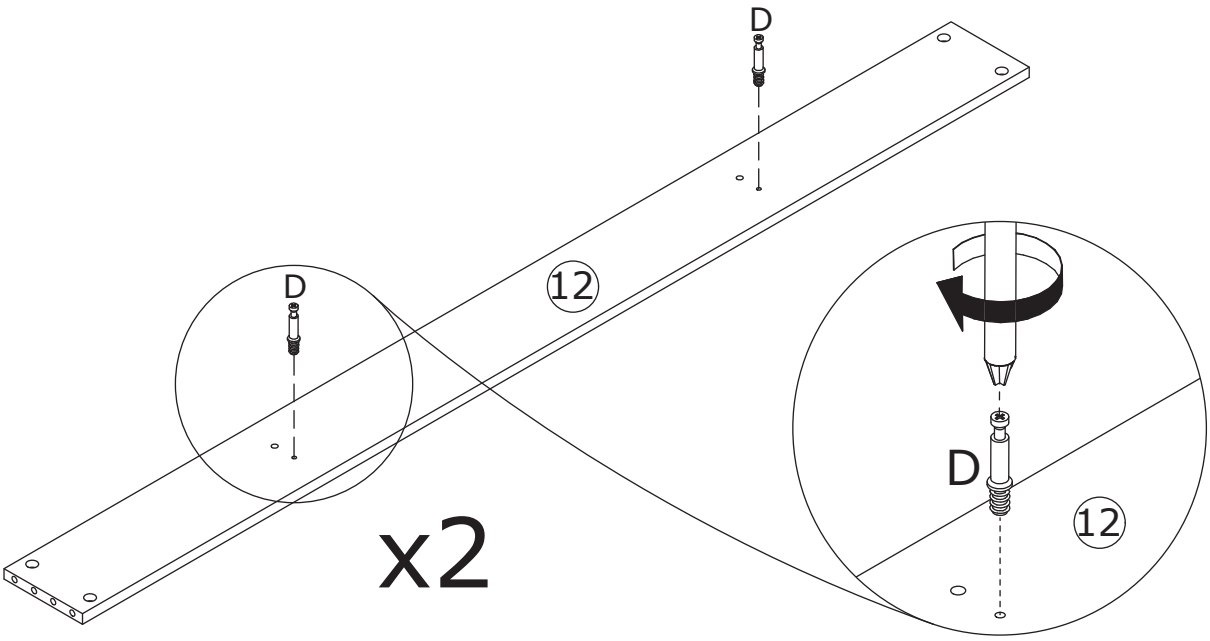

7

Connect board 12 to board 8 and 9 using wooden dowel(E), add cam lock(F) into board 8,9 and turn clockwise to tighten as shown.

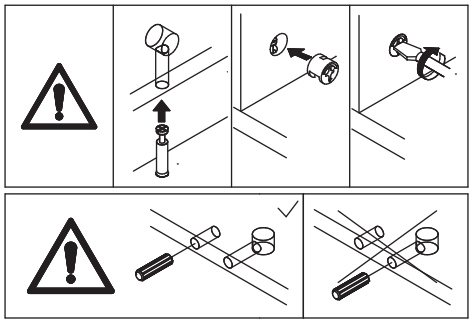

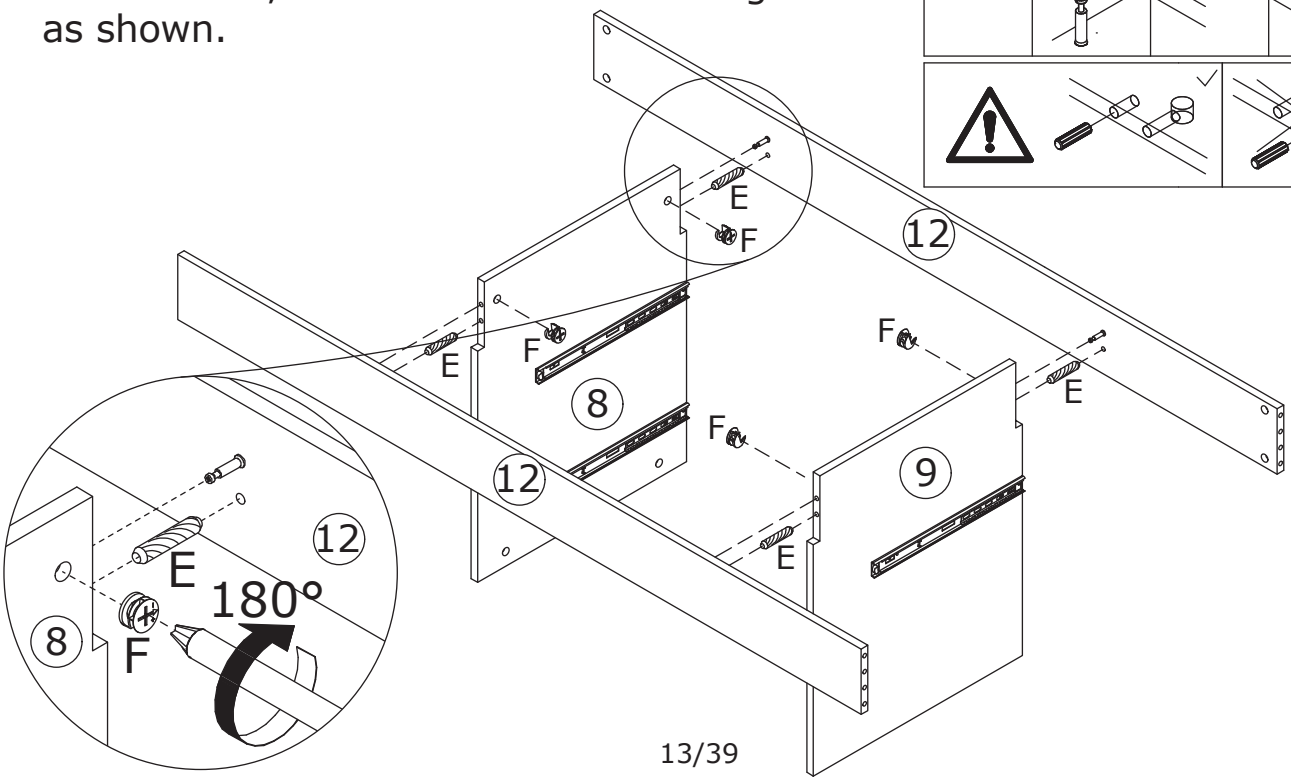

8

E x 8	F x 8	
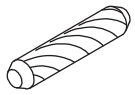		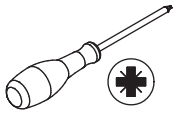
∅8 x 30 mm	∅15 x 10 mm	

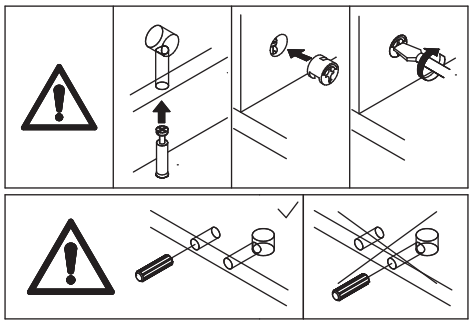

Connect board 6 and 7 to board 12 using wooden dowel(E), add cam lock(F) into board 12 and turn clockwise to tighten as shown.

9

C x 4	D x 2	G x 2	
	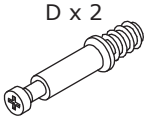	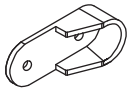	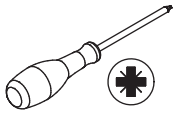
∅3 x 12 mm	∅6 x 35 mm		

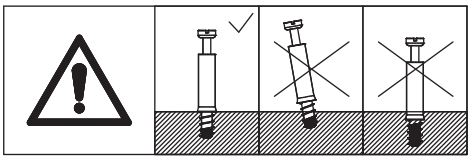

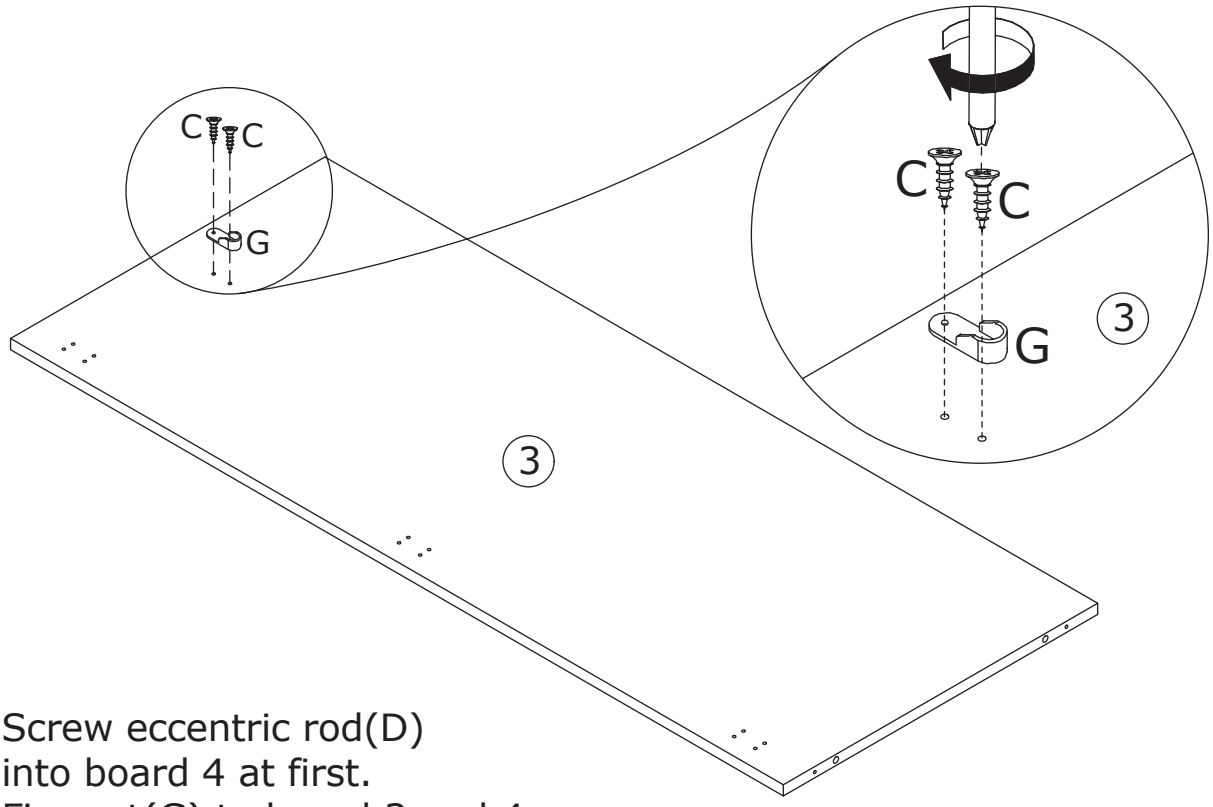

Screw eccentric rod(D)
into board 4 at first.
Fix part(G) to board 3 and 4
with screw(C) as shown.

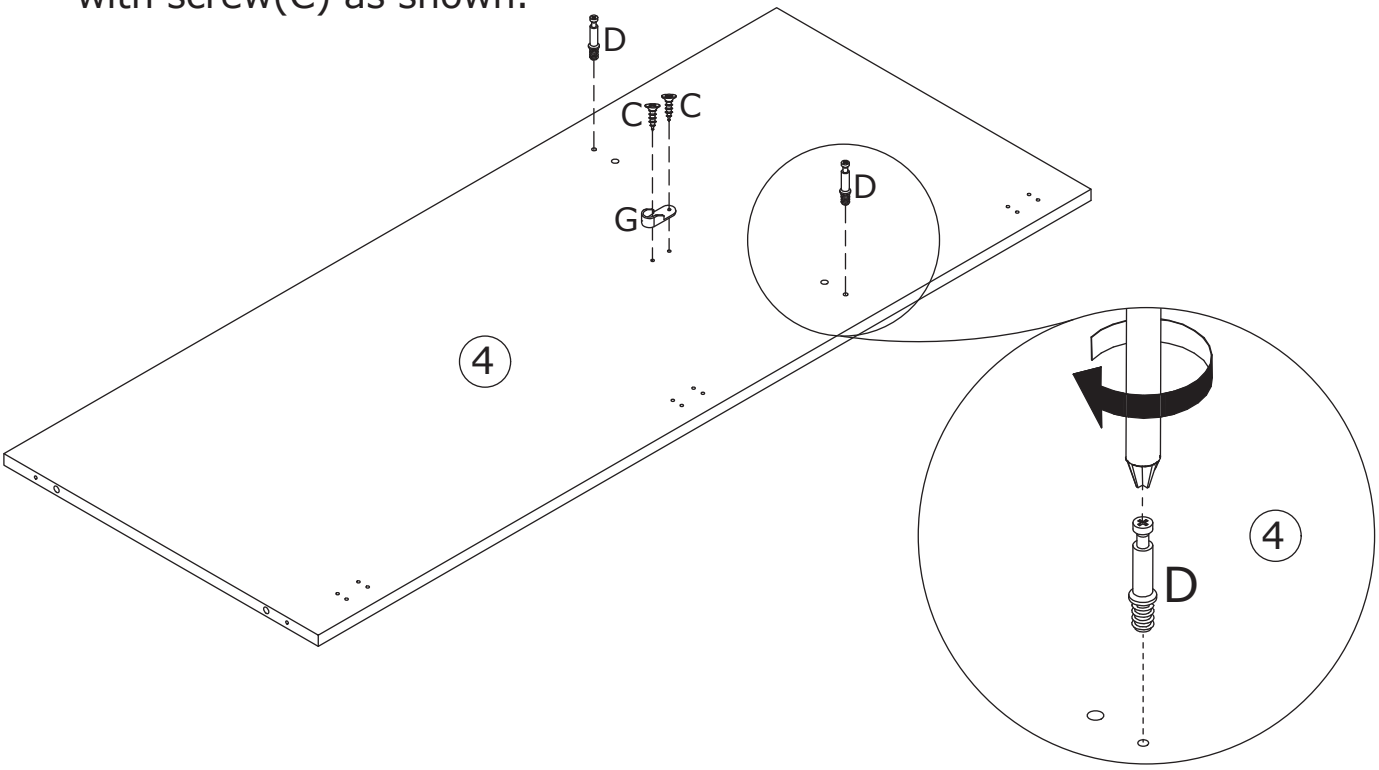

10

C x 4	D x 2	G x 2	
∅3 x 12 mm	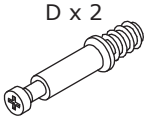 ∅6 x 35 mm	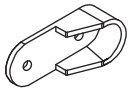	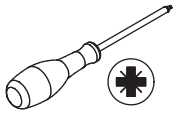

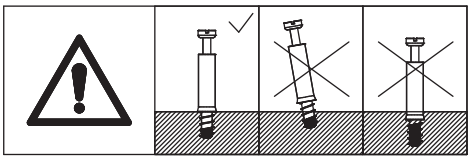

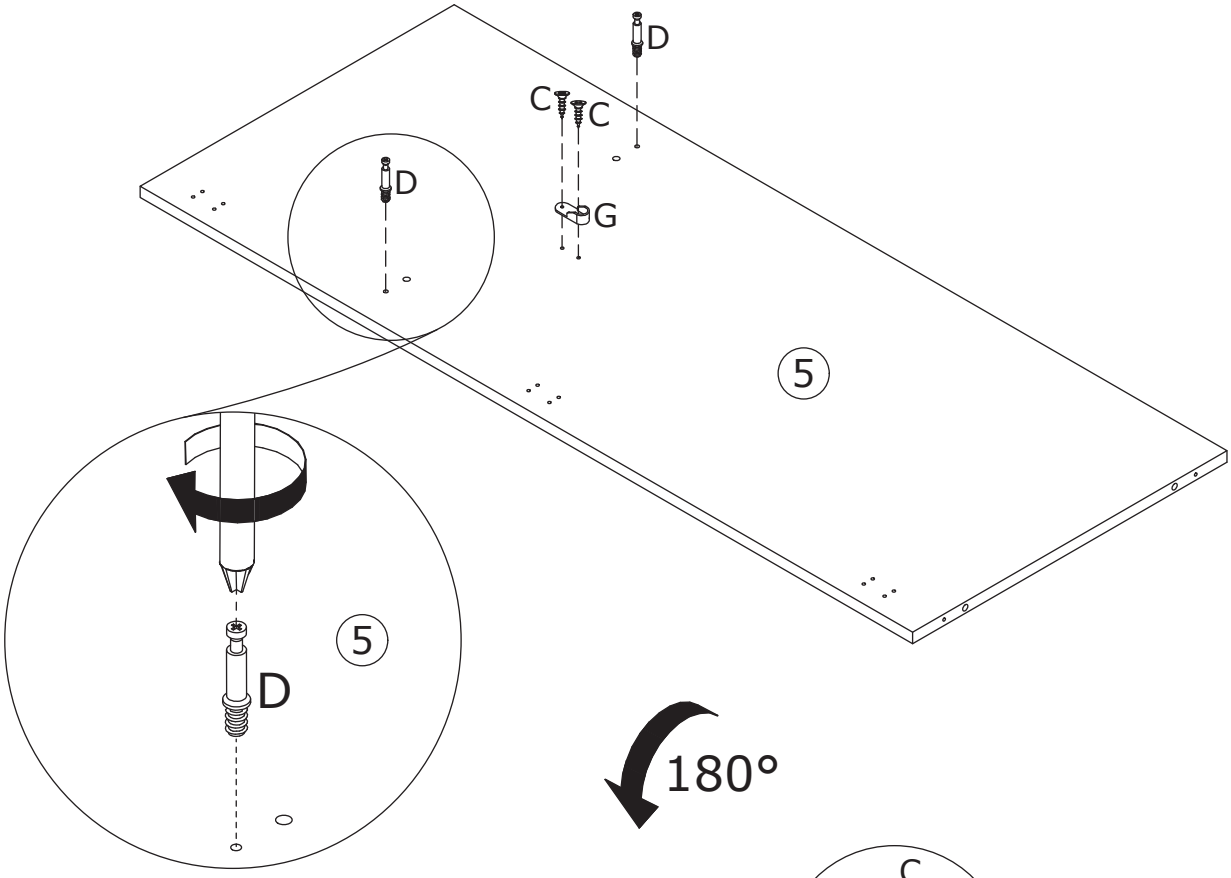

Screw eccentric rod(D) into board 5 and fix part(G) at first. **Flip to back,** fix part(G) as shown.

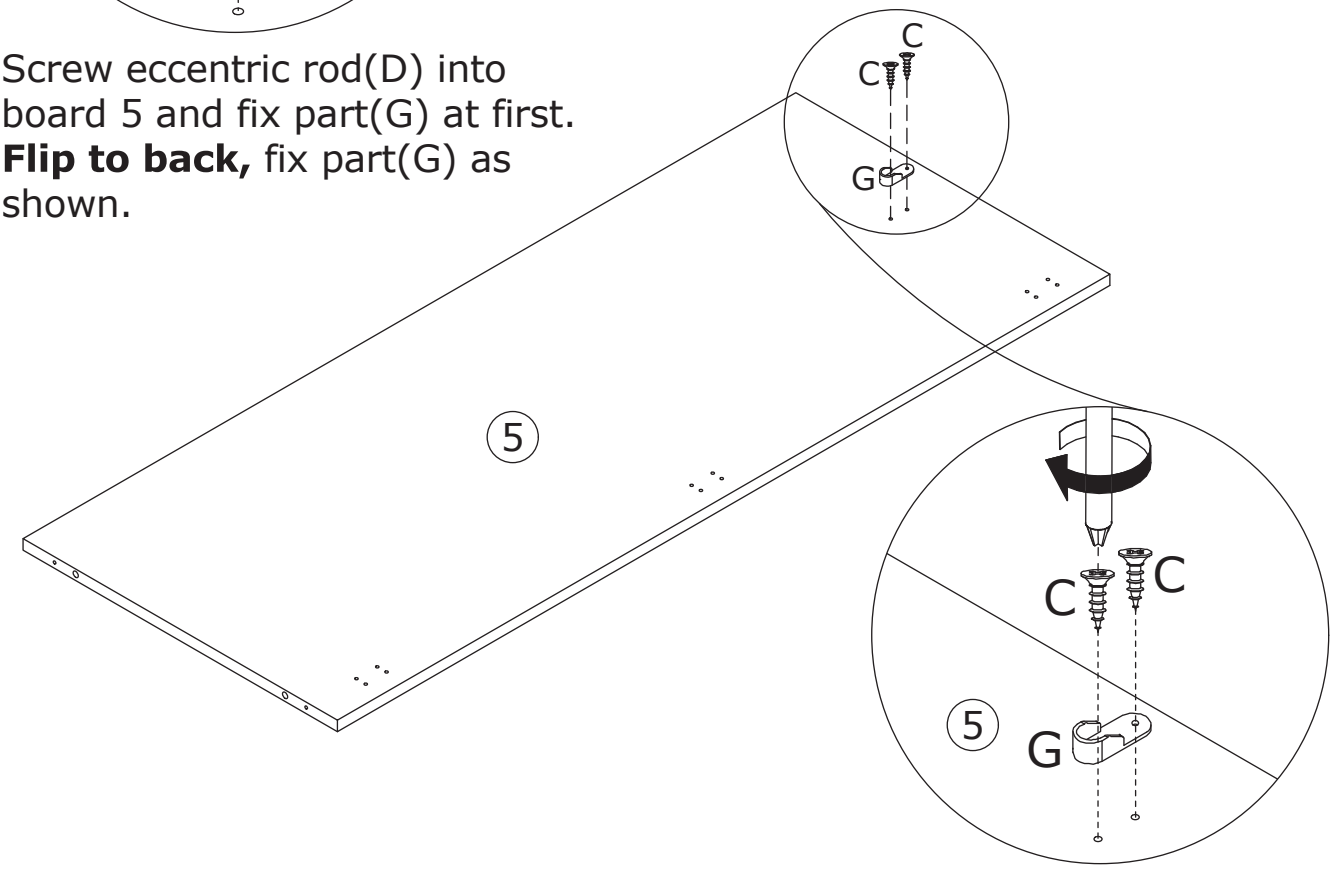

11

E x 4	F x 4	
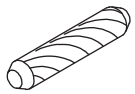		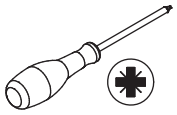
∅8 x 30 mm	∅15 x 10 mm	

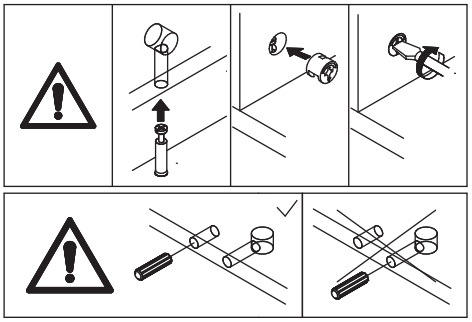

Connect board 4 and 5 to board 10 using wooden dowel(E), add cam lock(F) into board 10 and turn clockwise to tighten as shown.

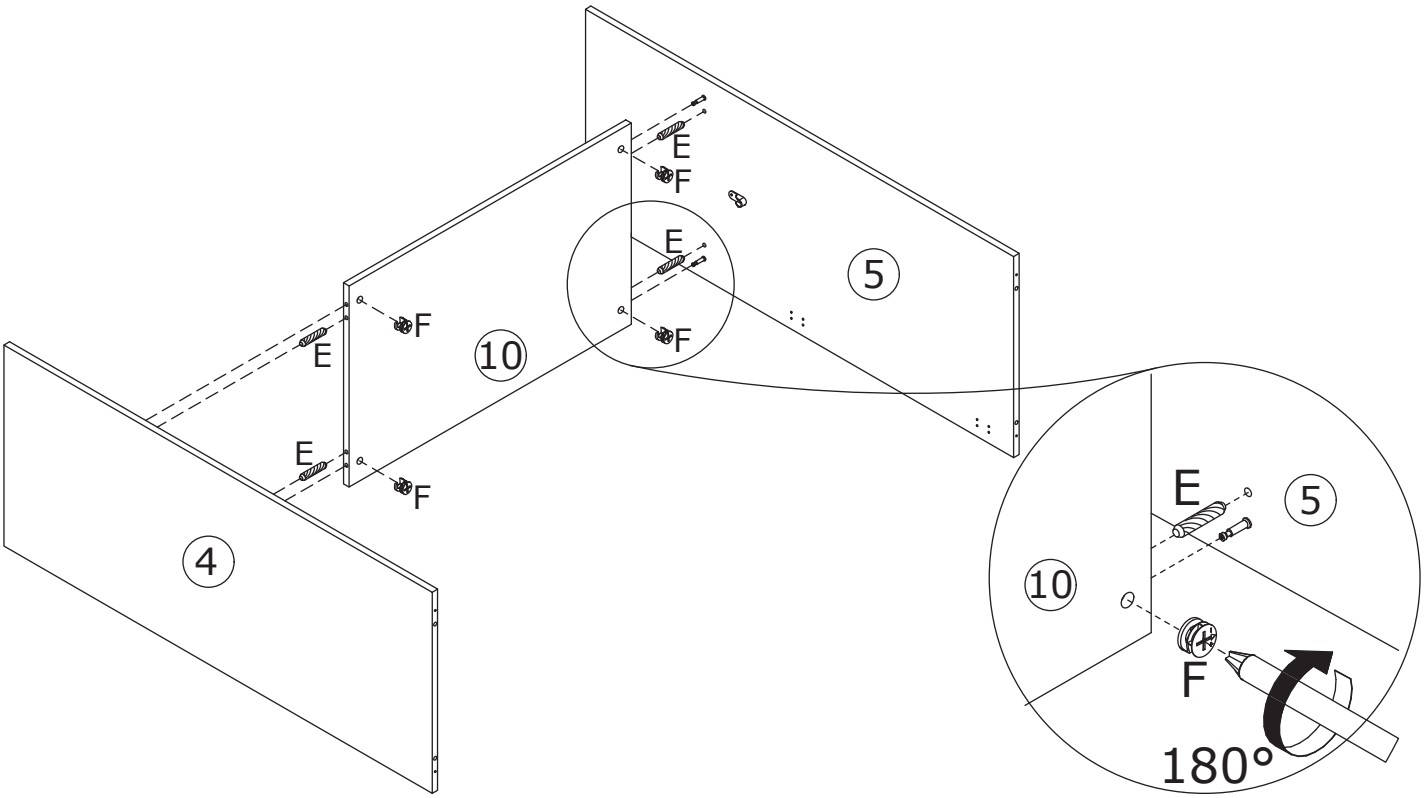

12

D x 8

∅6 x 35 mm

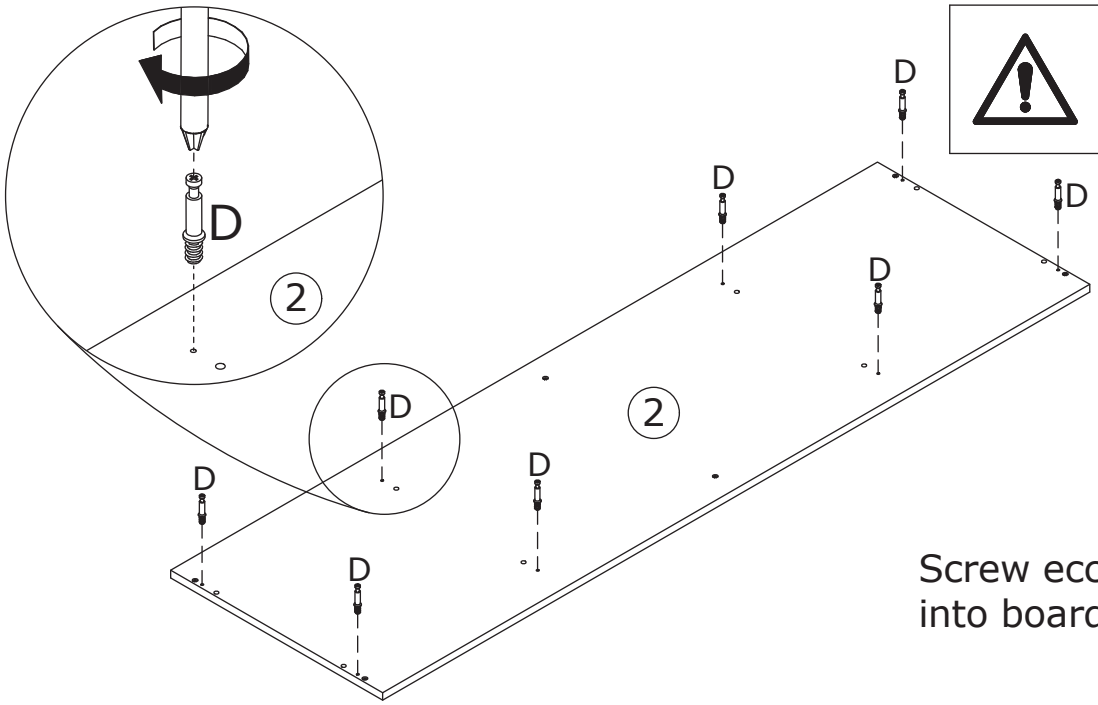

Screw eccentric rod(D) into board 2 at first.

13

E x 6

∅8 x 30 mm

J x 6

∅4 x 35 mm

Attach board 1 to board 3, 5 and 4 using wooden dowel(E), and fix with screw(J) as shown.

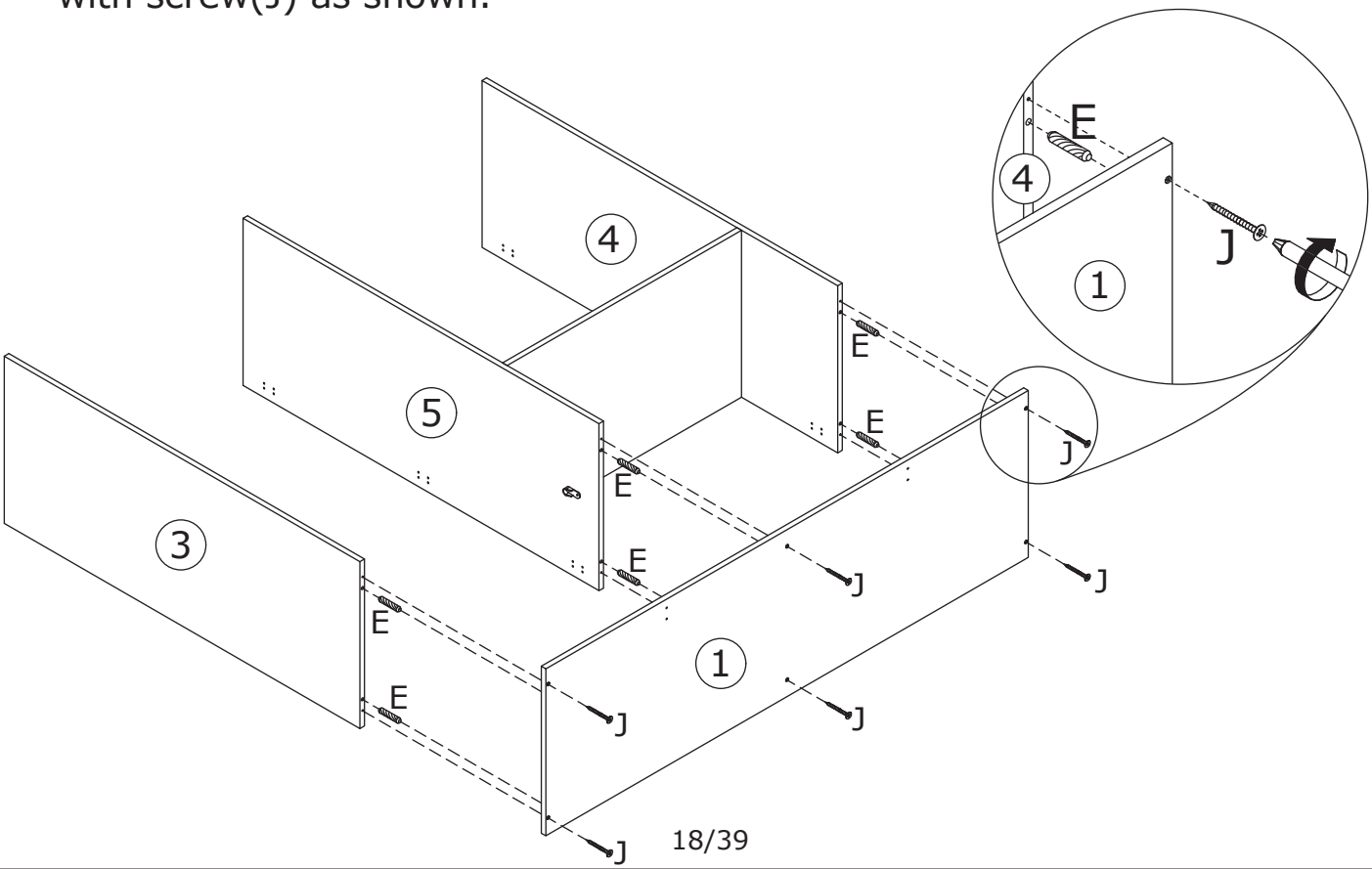

14

E x 6	J x 6	
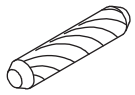	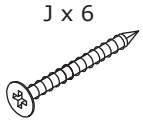	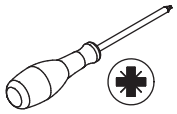
∅8 x 30 mm	∅4 x 35 mm	

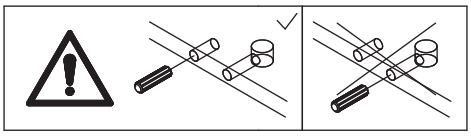

Attach board 2 to board 4, 5 and 3 using wooden dowel(E), and fix with screw(J) as shown.

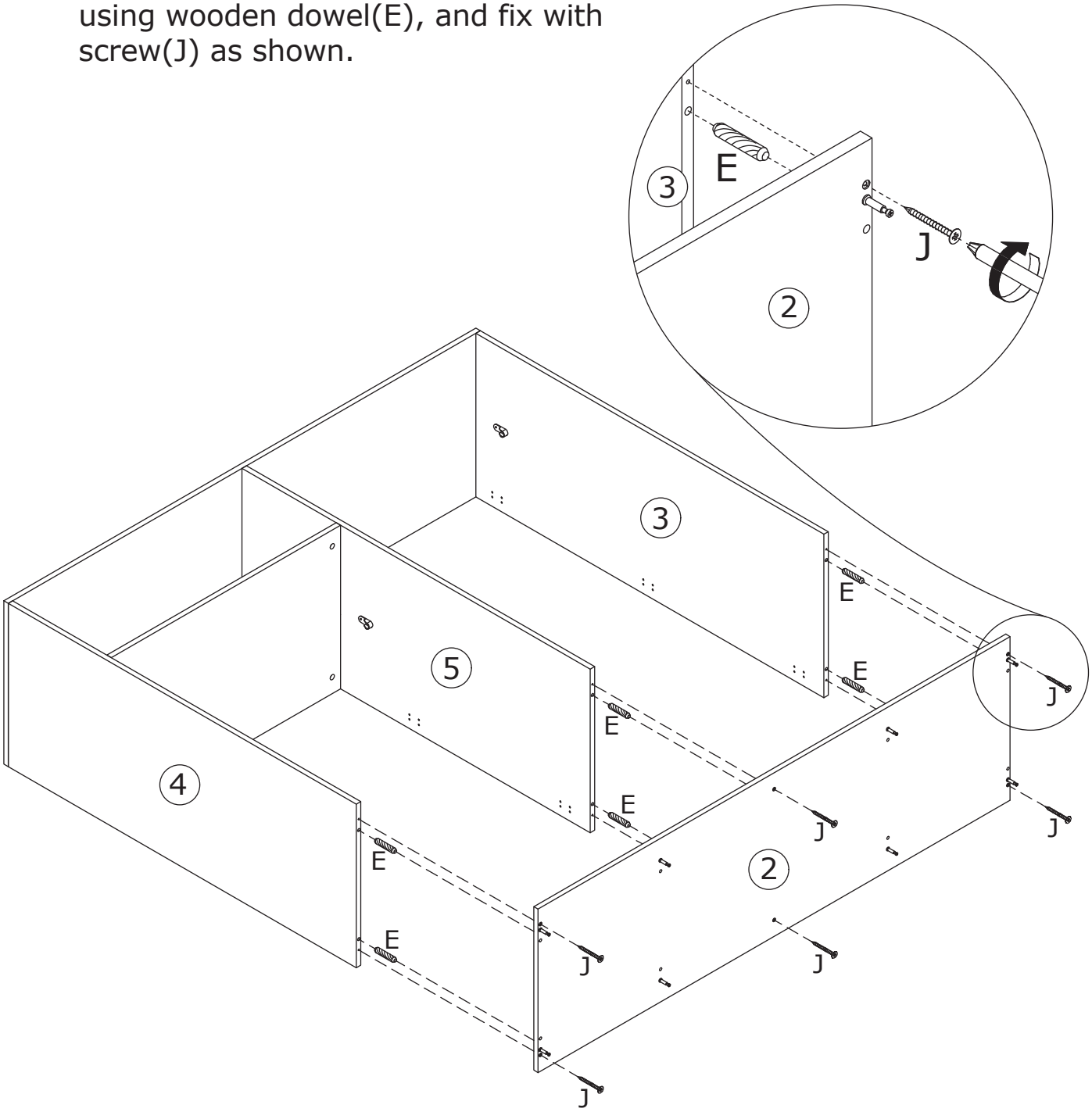

15

E x 8	F x 8	
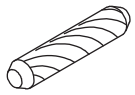		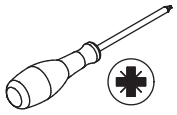
∅8 x 30 mm	∅15 x 10 mm	

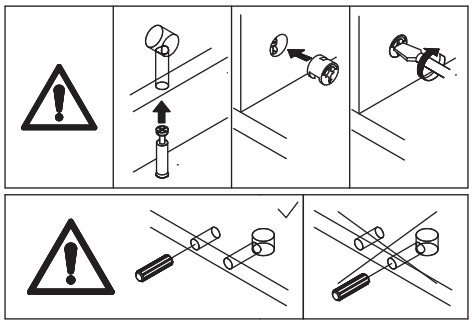

Connect two components using wooden dowel(E), add cam lock(F) into and turn clockwise to tighten as shown.

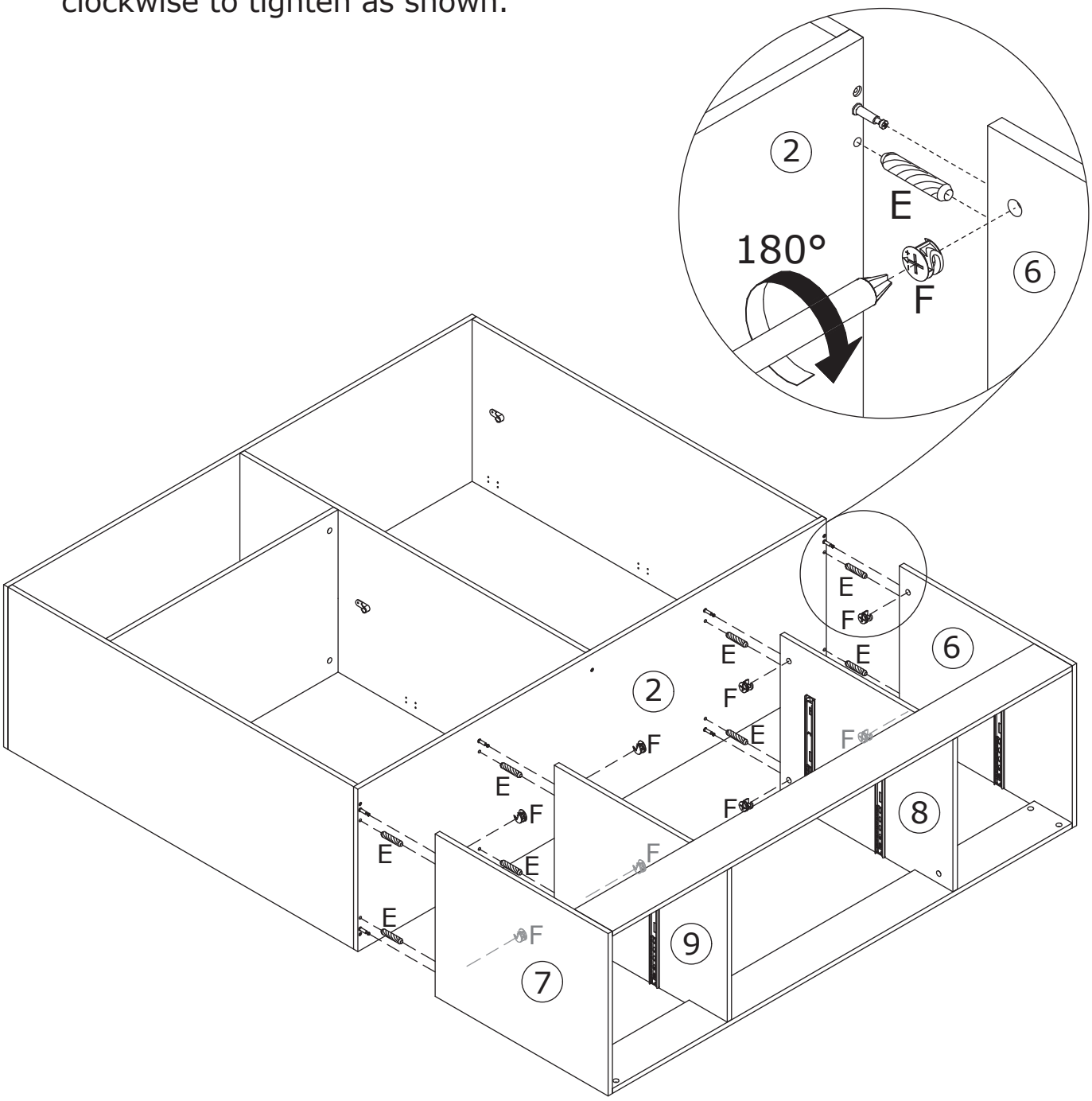

16

Connect board 13 with plank 14 at first.

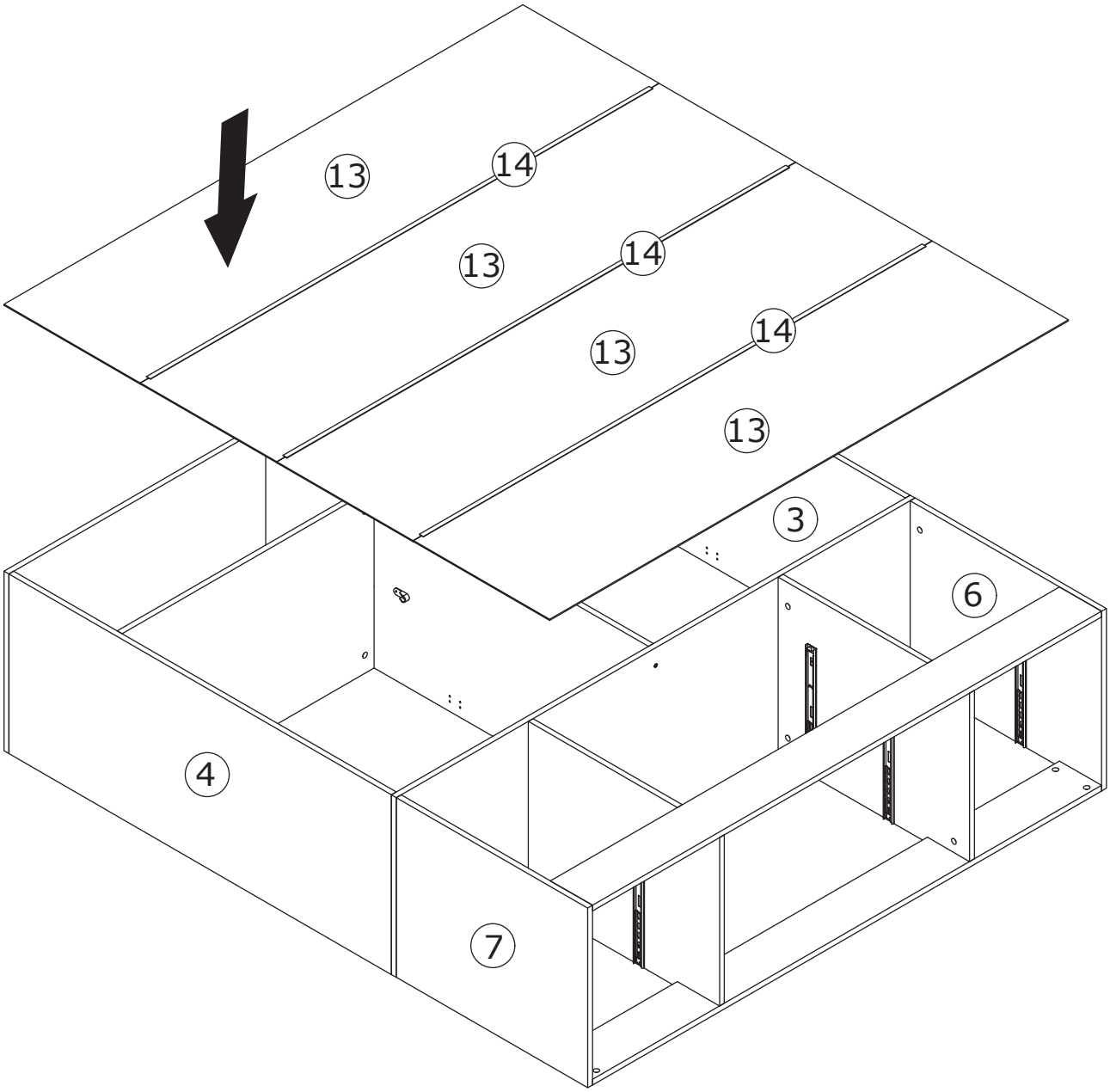

17

K x 32

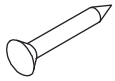

∅2 x 20 mm

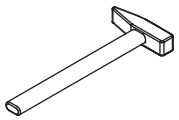

Fix back boards with nail(K) as shown.

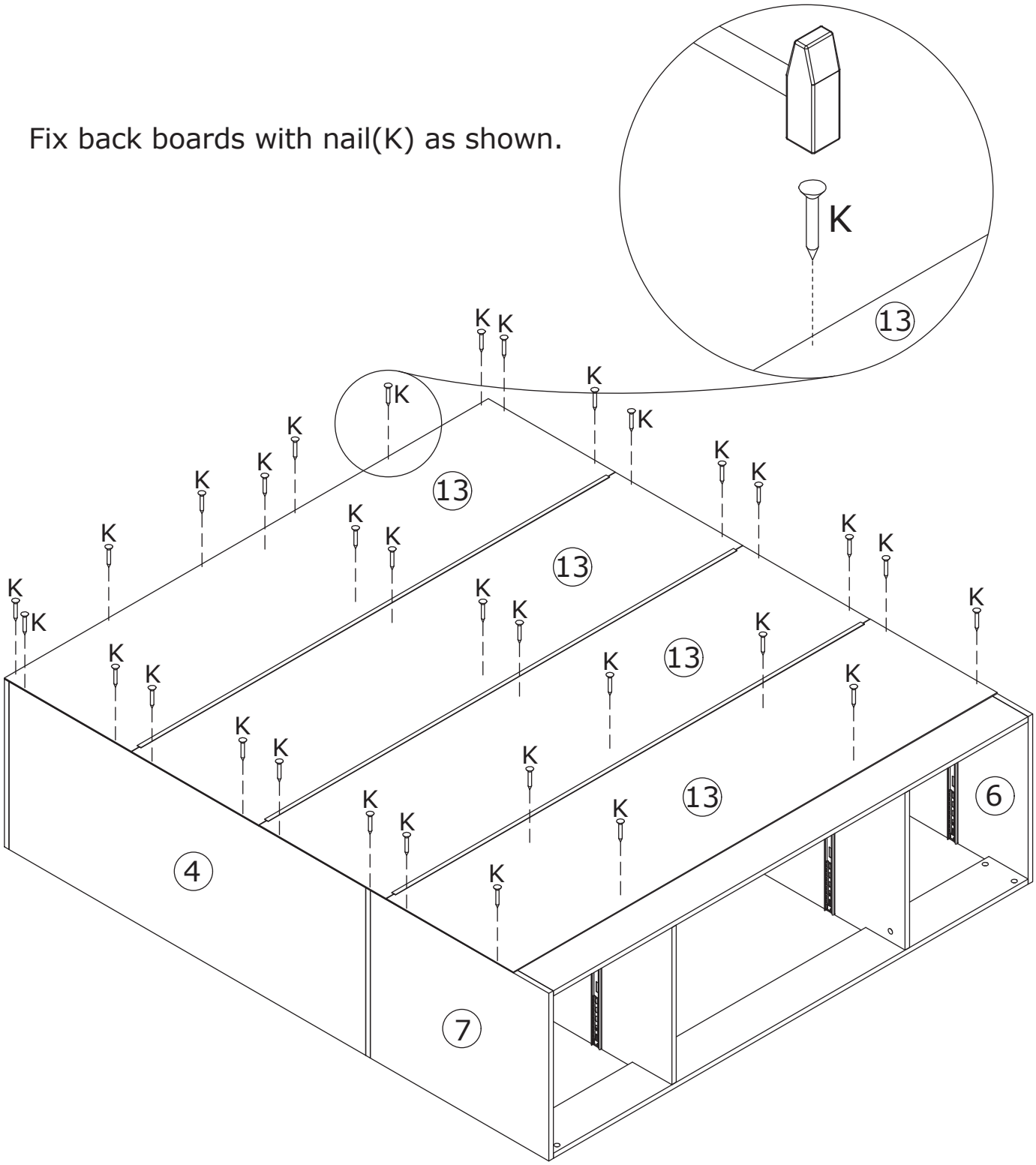

18

Place clothing rod 17 on.

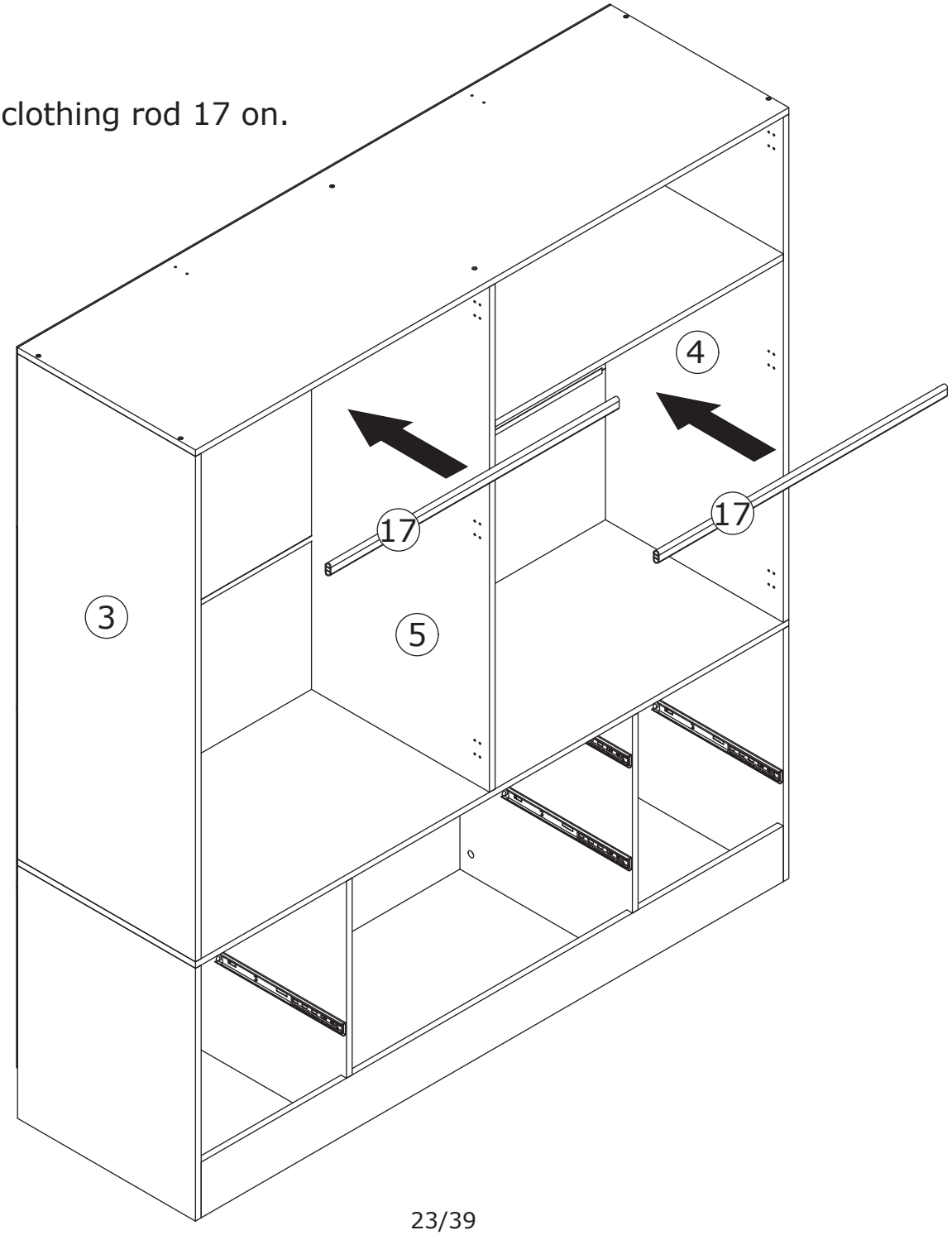

19

Pay attention to the difference between the middle parts of the two types of door hinges.

- The curved door hinges(L) are used on the door panel in the middle of the unit.
- And the full coverage door hinges(Q) are used on the outermost door plates.

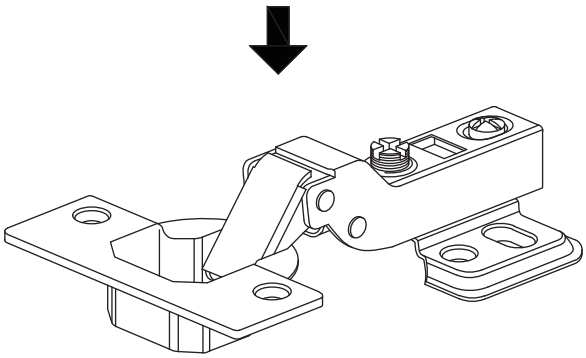

L

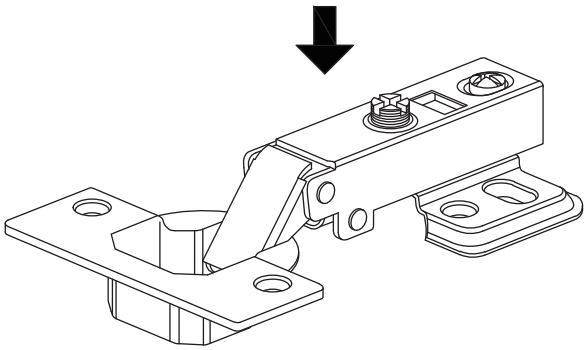

Q

20

L x 6	N x 12	P x 2	Q x 4	
	∅4 x 14 mm	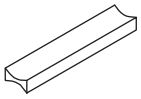	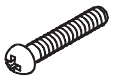 ∅4 x 16mm	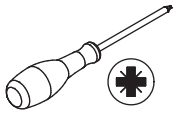

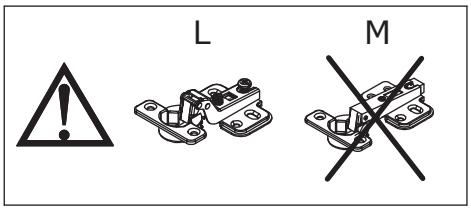

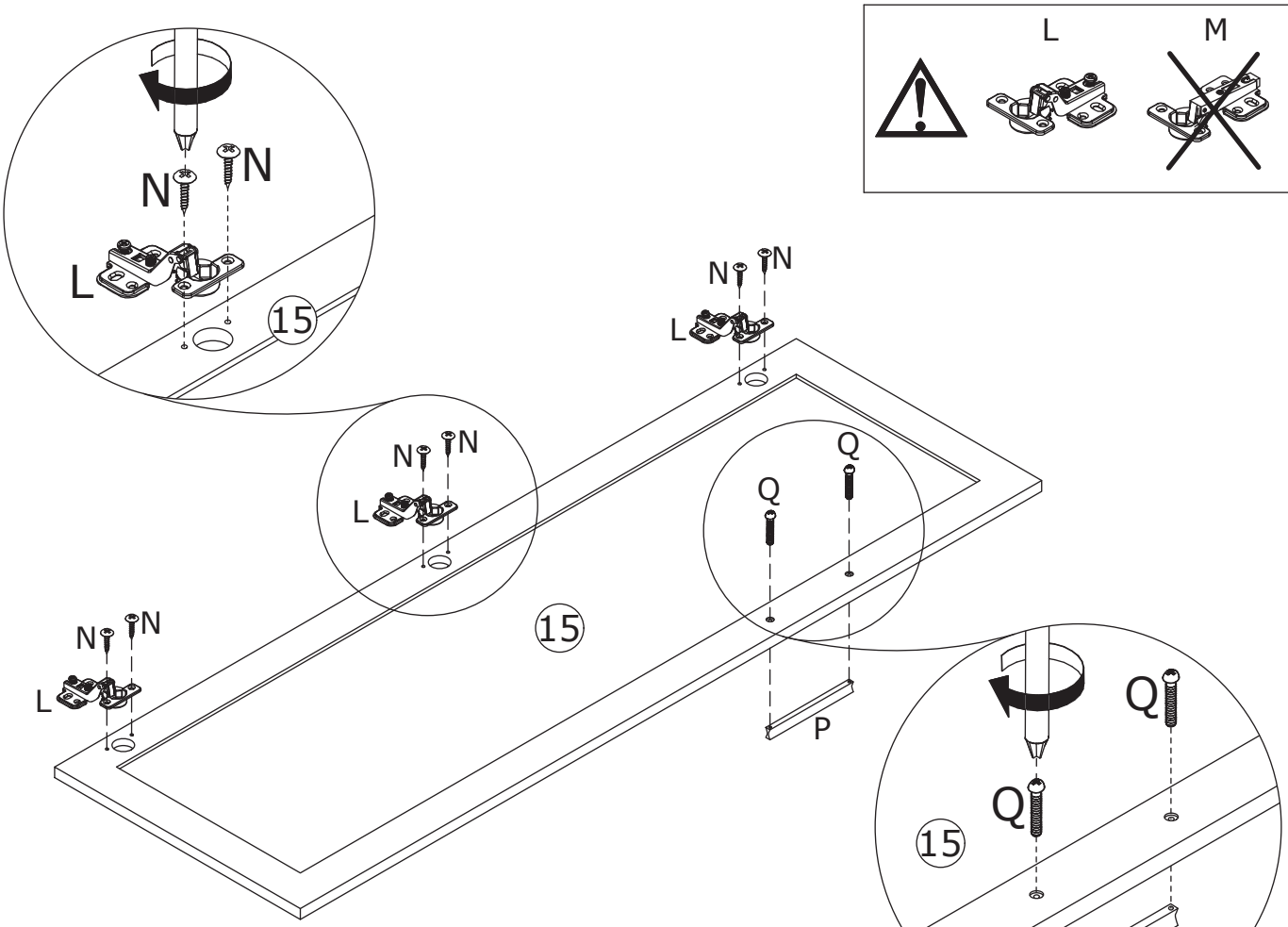

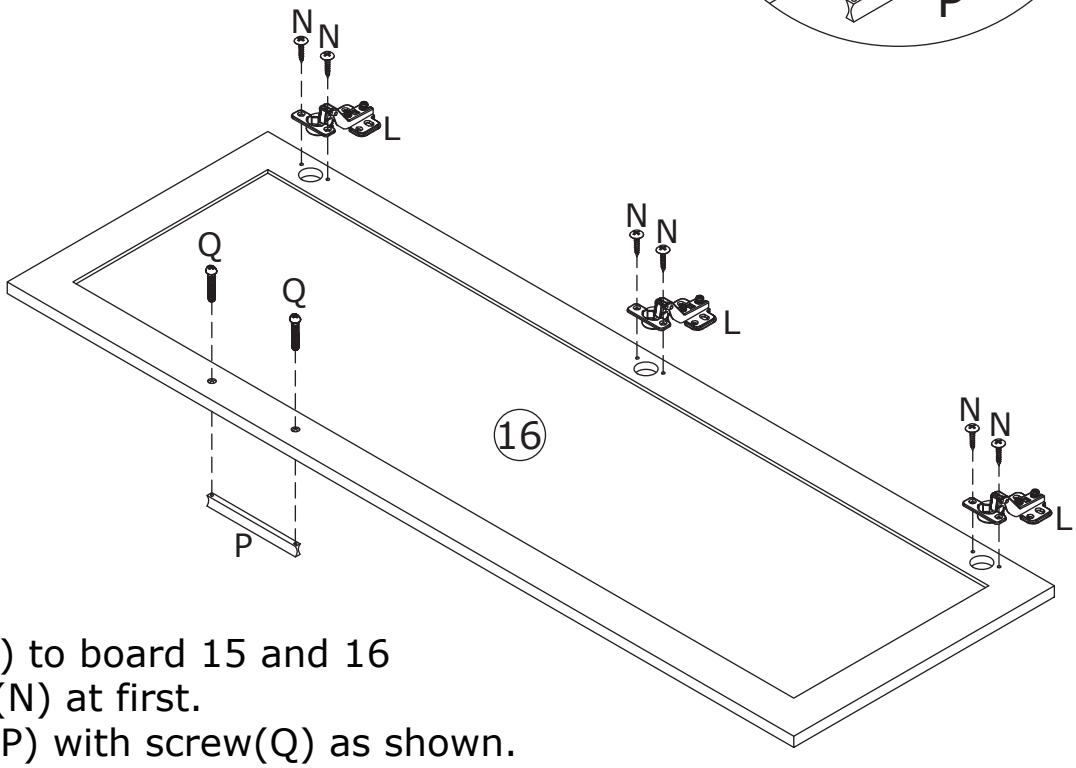

Fix hinge(L) to board 15 and 16
with screw(N) at first.
Fix handle(P) with screw(Q) as shown.

21

N x 24

∅4 x 14 mm

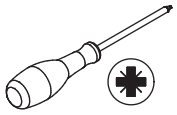

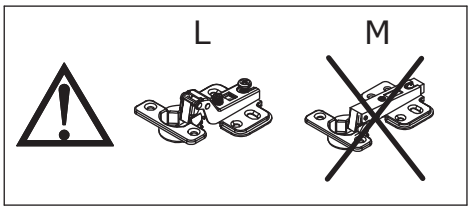

Assemble door 15 and 16 to board 5
by fixing hinge with screw(N) as shown.

Nx4
L
Nx4
4
5
Nx4
15
L
Nx4
16
3
Nx4
L
Nx4
L
16
Nx4
5

22

M x 6	N x 12	P x 2	Q x 4	
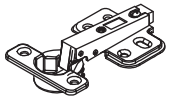	∅4 x 14 mm	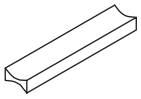	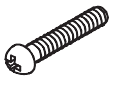 ∅4 x 16mm	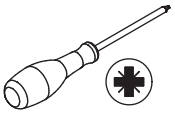

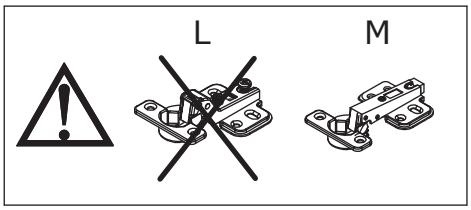

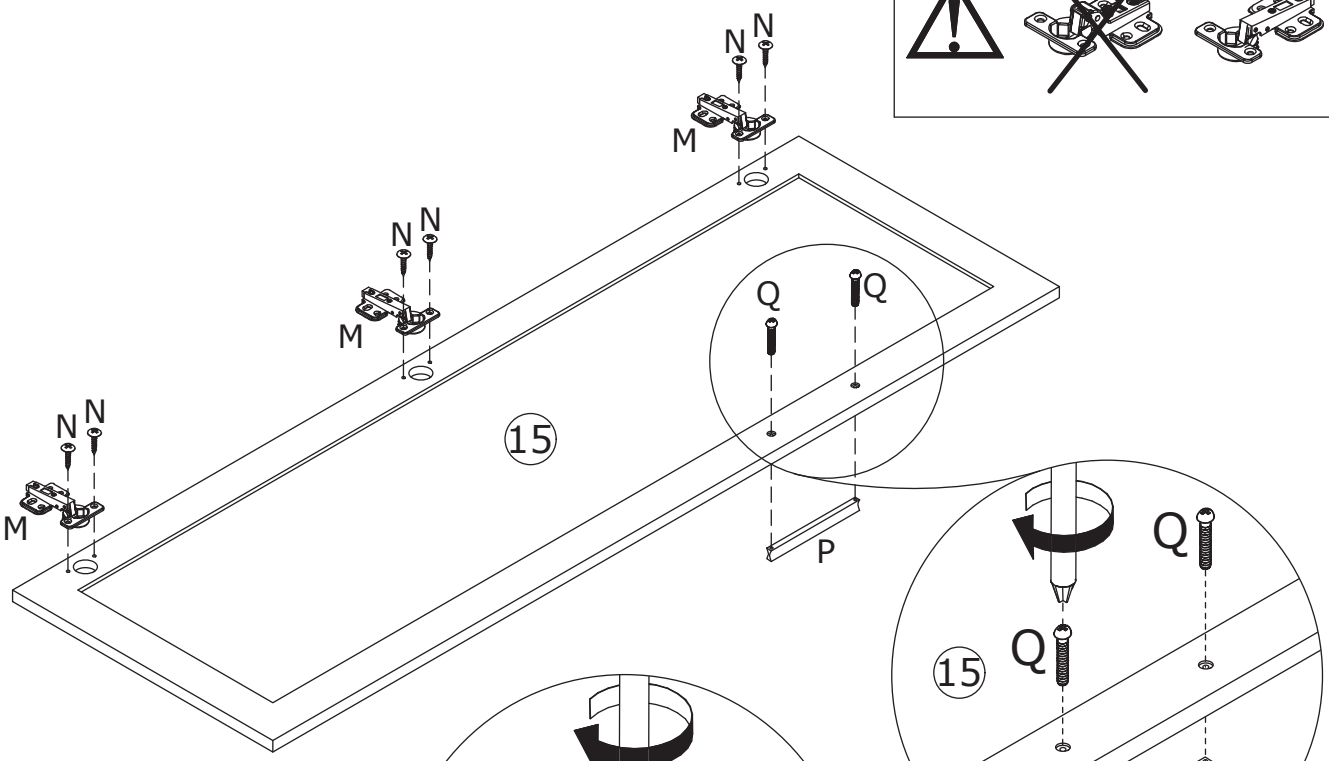

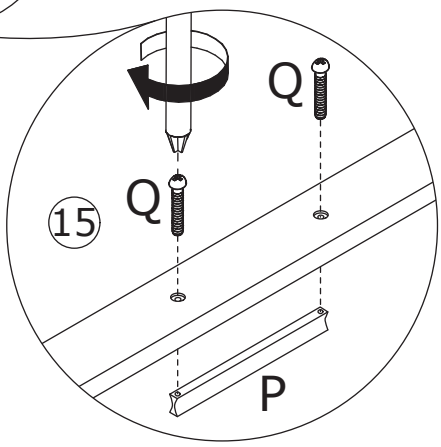

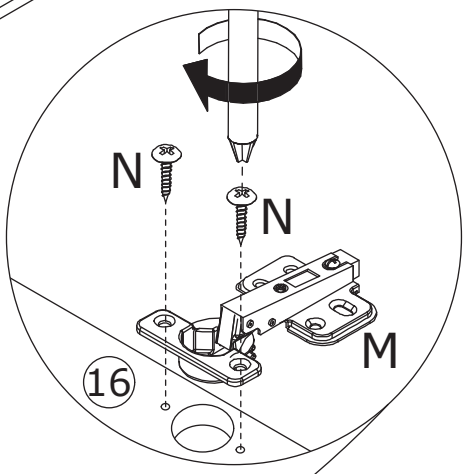

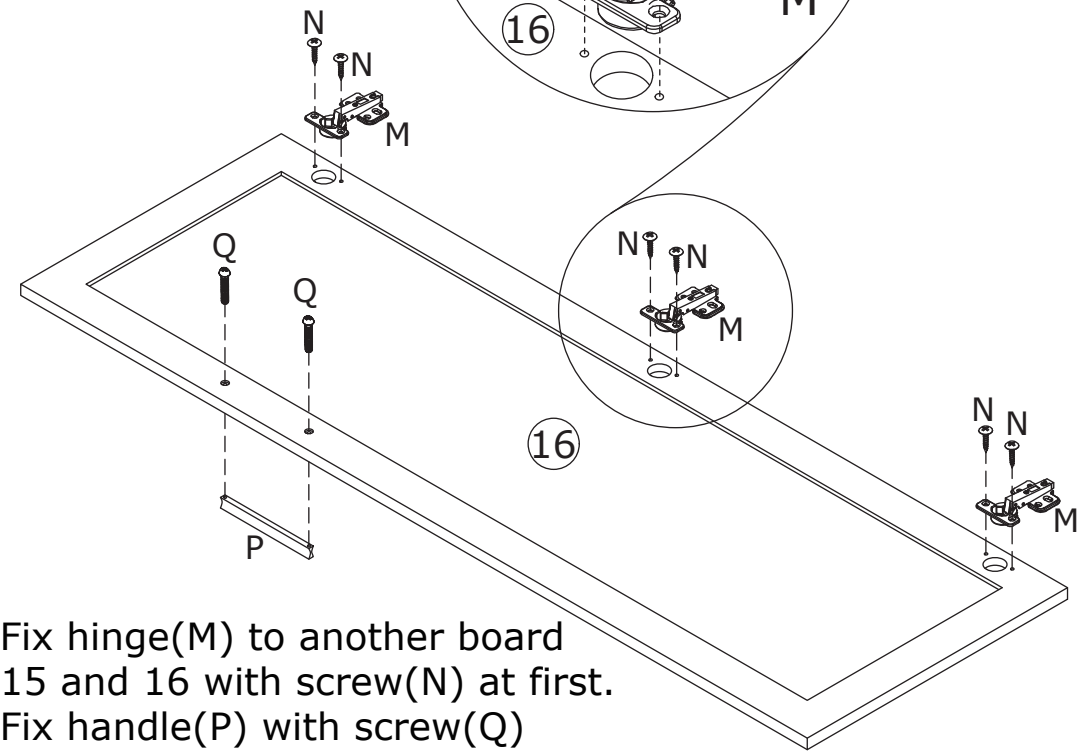

Fix hinge(M) to another board 15 and 16 with screw(N) at first. Fix handle(P) with screw(Q) as shown.

23

N x 24

∅4 x 14 mm

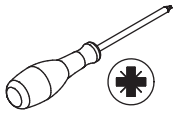

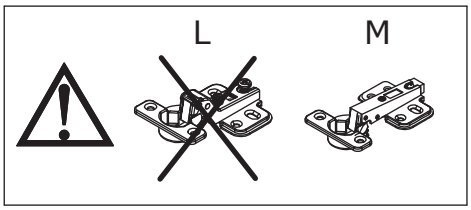

Assemble door 15 and 16 to board 3 and 4 by fixing hinge with screw(N) as shown.

Nx4
M
Nx4
M
16
Nx4
4
M
Nx4
Nx4
3
15
Nx4
M
Nx4
4
16

24

Screw eccentric rod(D) into board 18 and 19 at first.

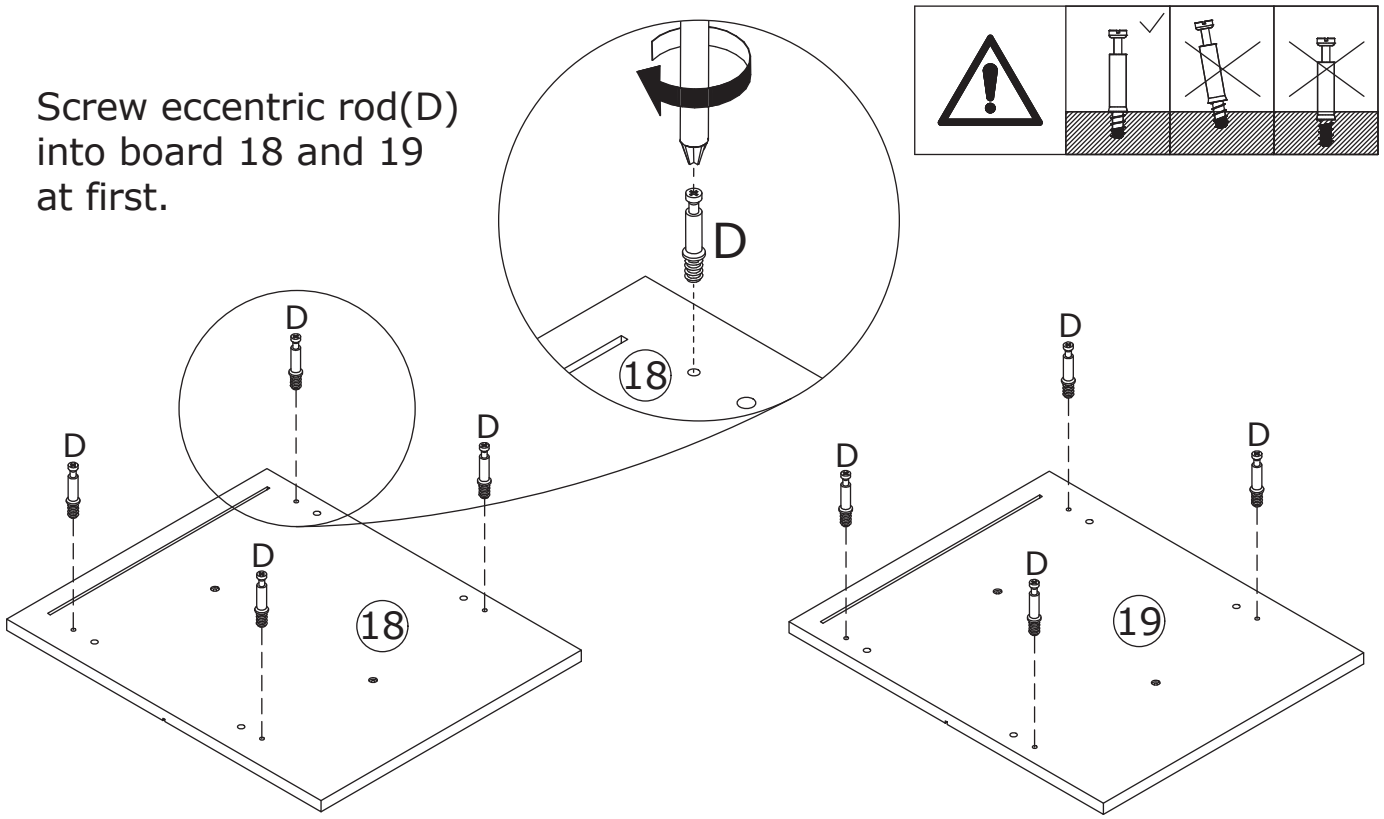

25

Fix knob(R) to board 18 and 19 with screw(Q) as shown.

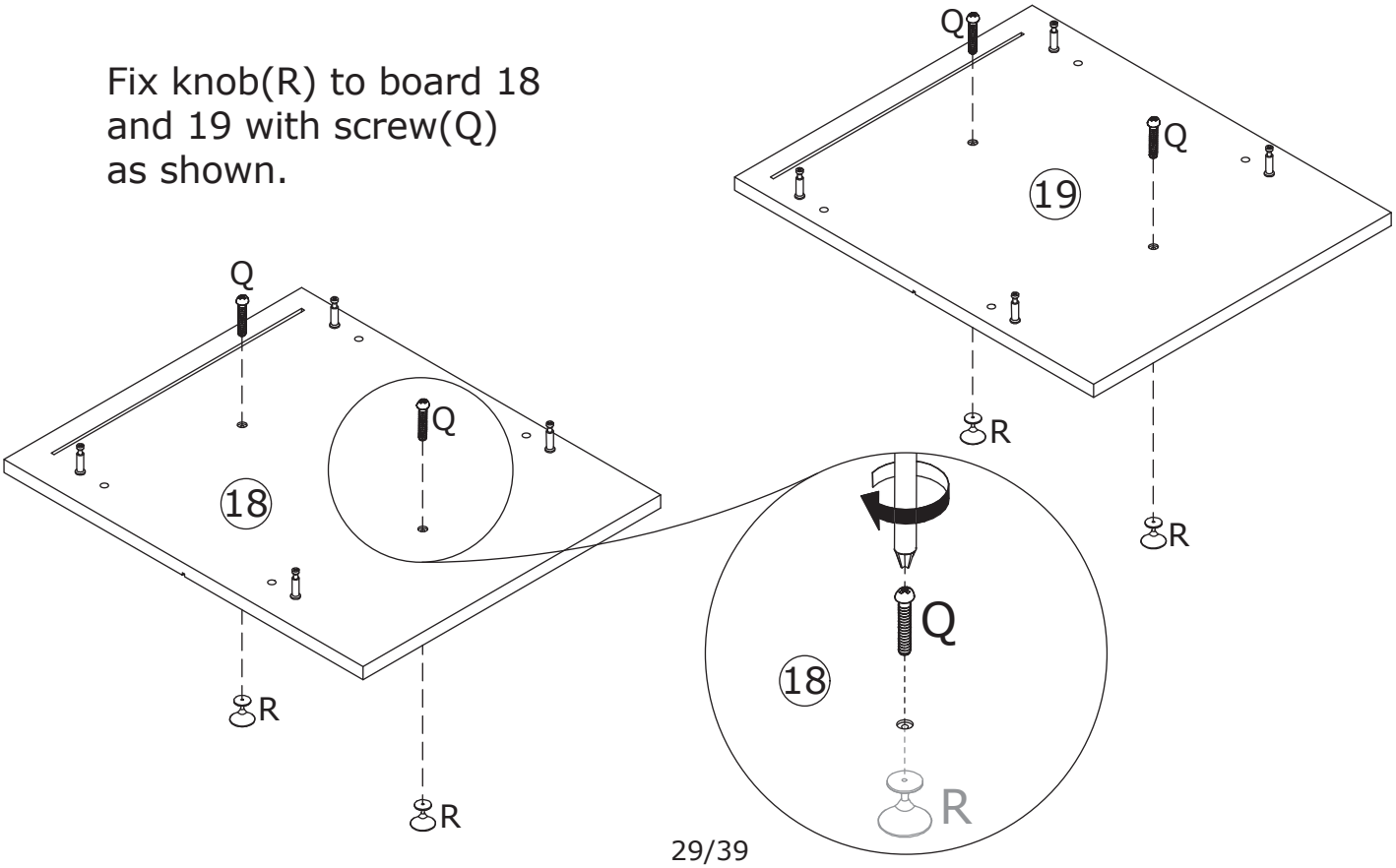

26

B x 4	C x 12	
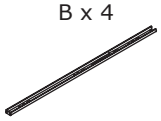 L = 350 mm	∅3 x 12 mm	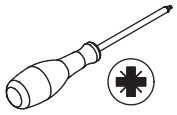

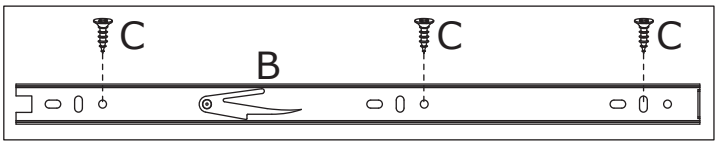

Fix track(B) to board 20 and 21 with screw(C) as shown.

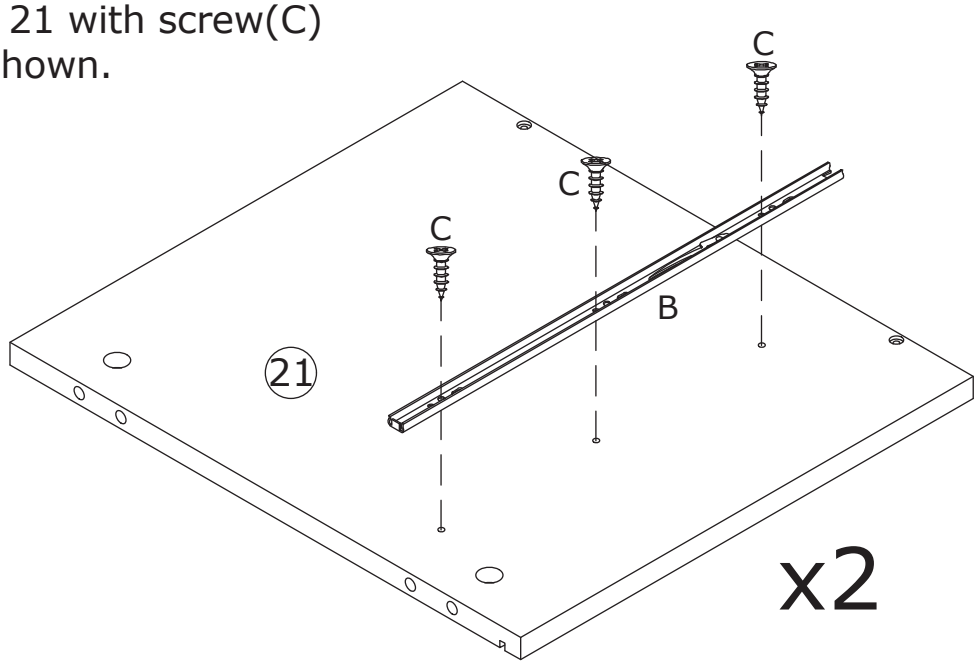

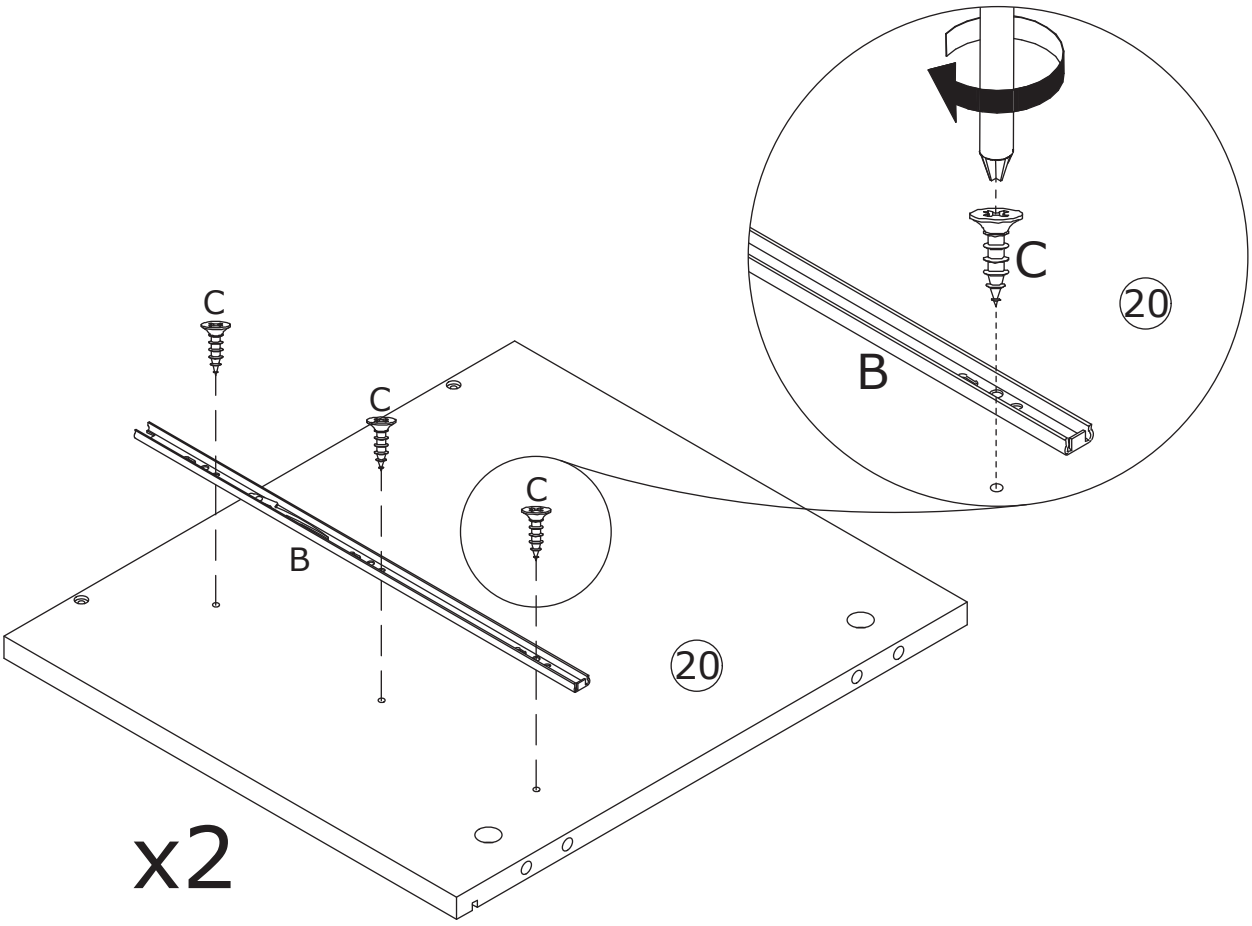

27

E x 8	J x 8	
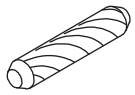	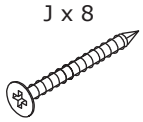	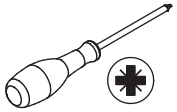
∅8 x 30 mm	∅4 x 35 mm	

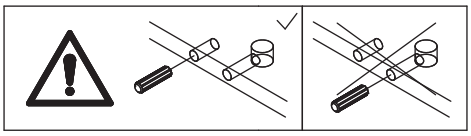

Connect board 20 and 21 to board 22 using wooden dowel(E), and fix with screw(J) as shown.

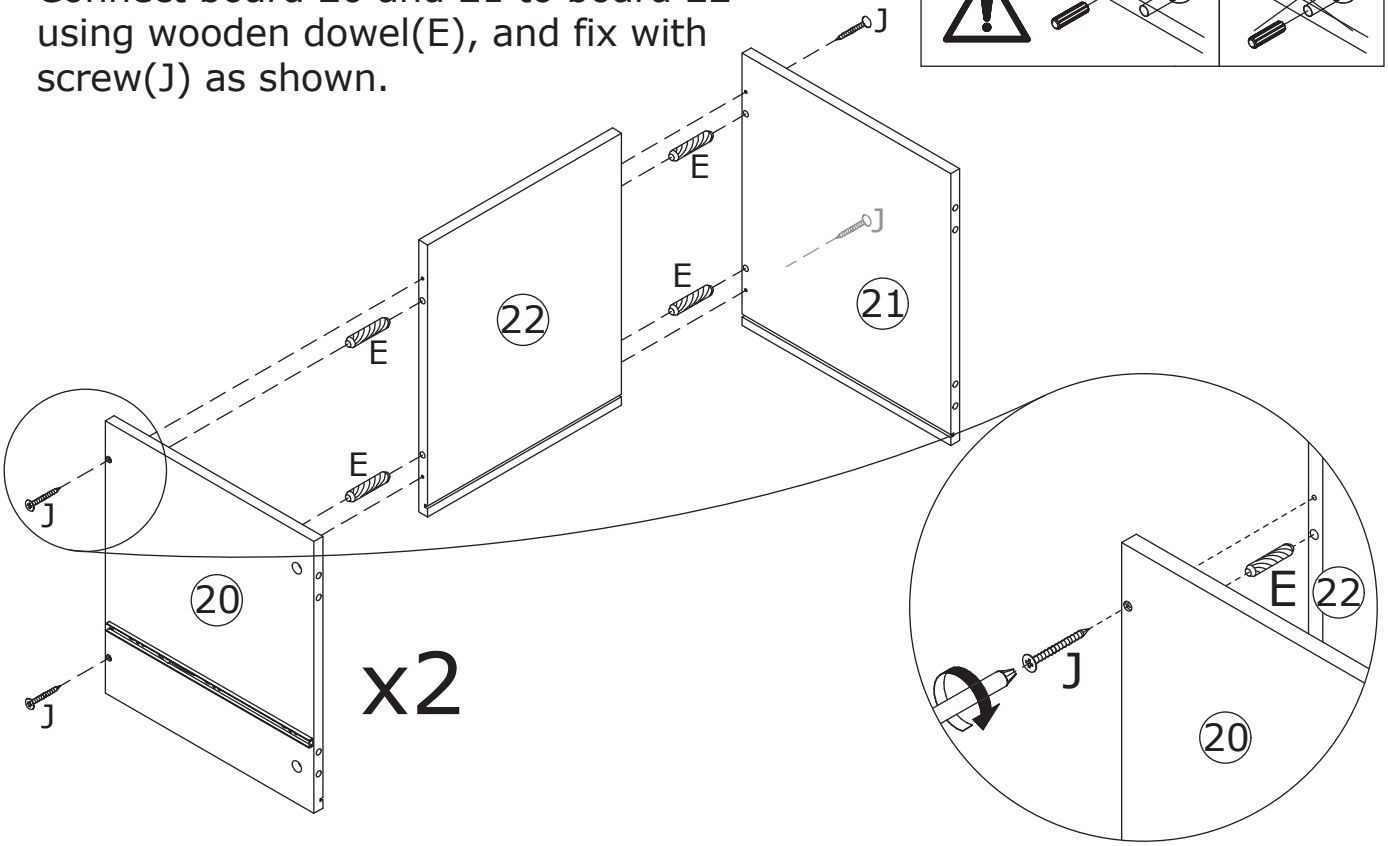

28

Insert back board 23 along grooves as shown.

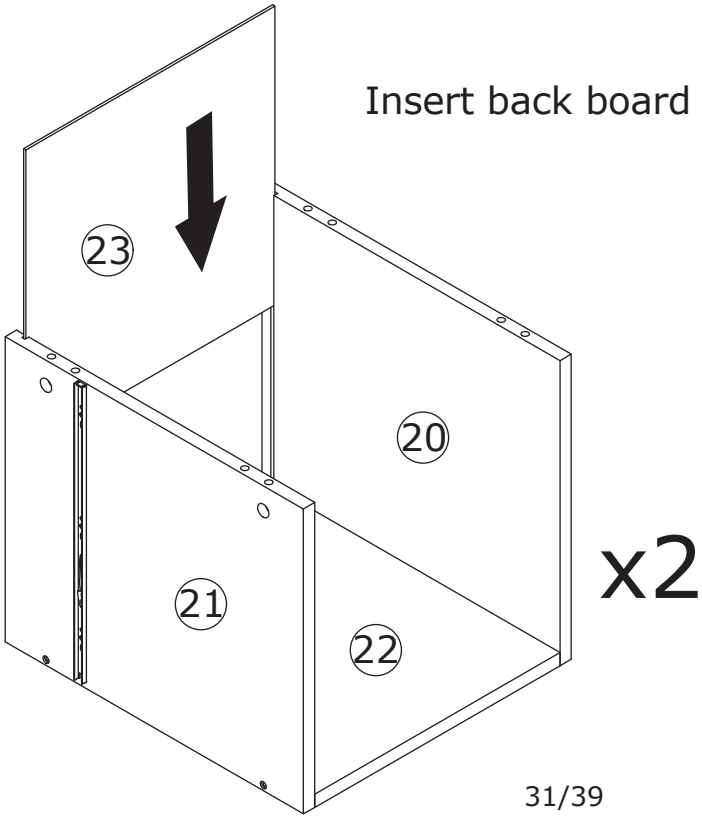

29

E x 8	F x 8	
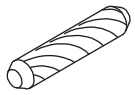		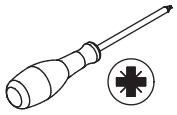
∅8 x 30 mm	∅15 x 10 mm	

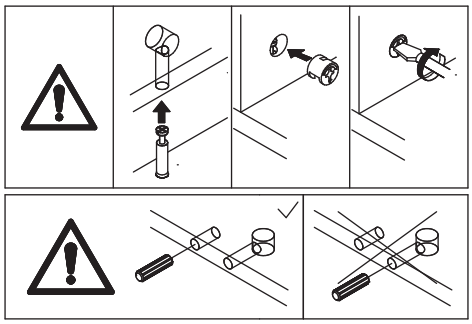

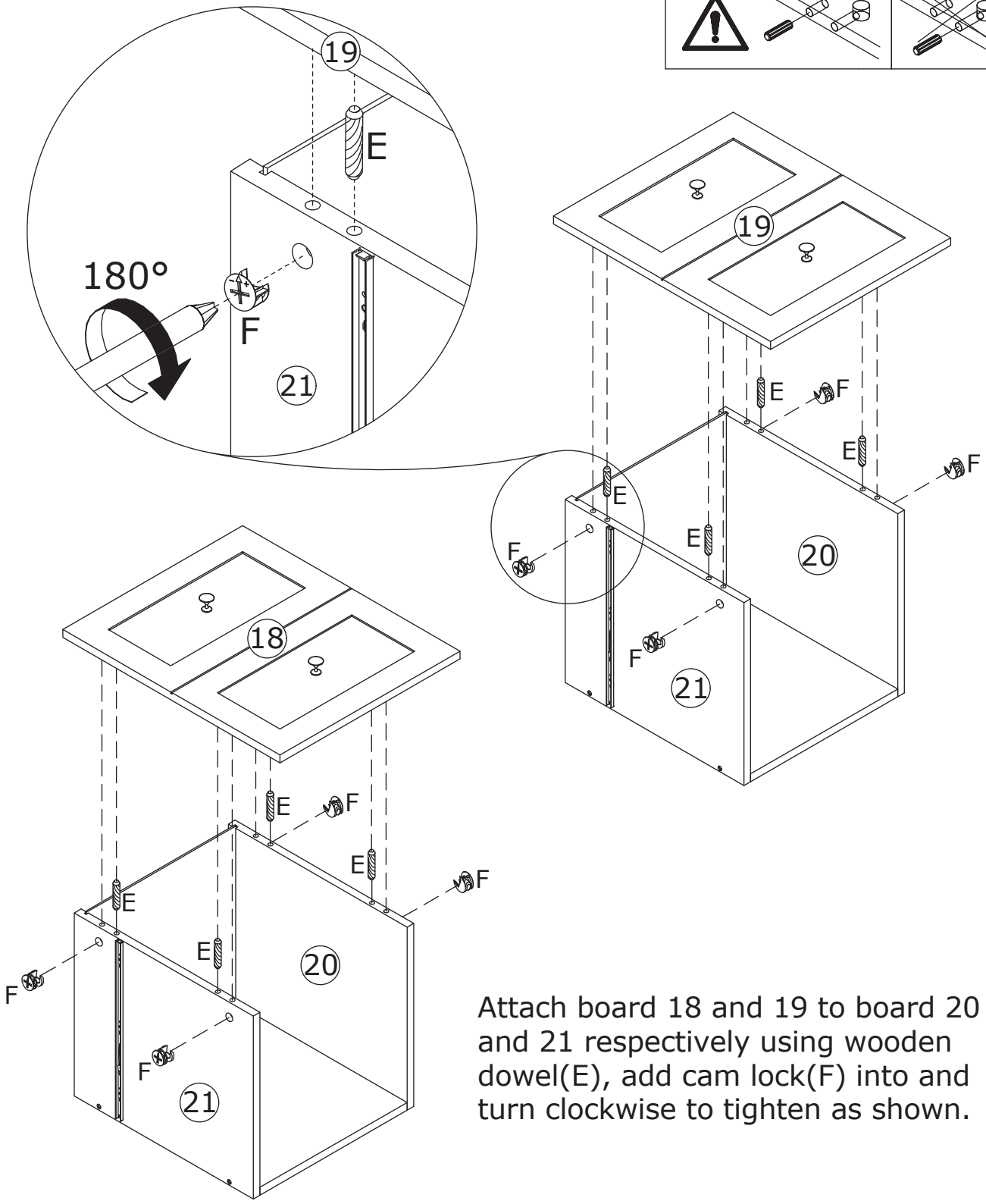

Attach board 18 and 19 to board 20 and 21 respectively using wooden dowel(E), add cam lock(F) into and turn clockwise to tighten as shown.

30

D x 10	
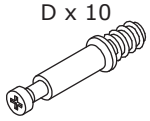 ∅6 x 35 mm	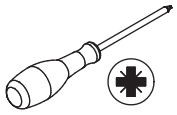

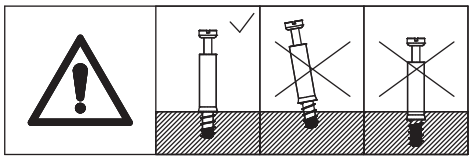

Screw eccentric rod(D) into board 24 at first.

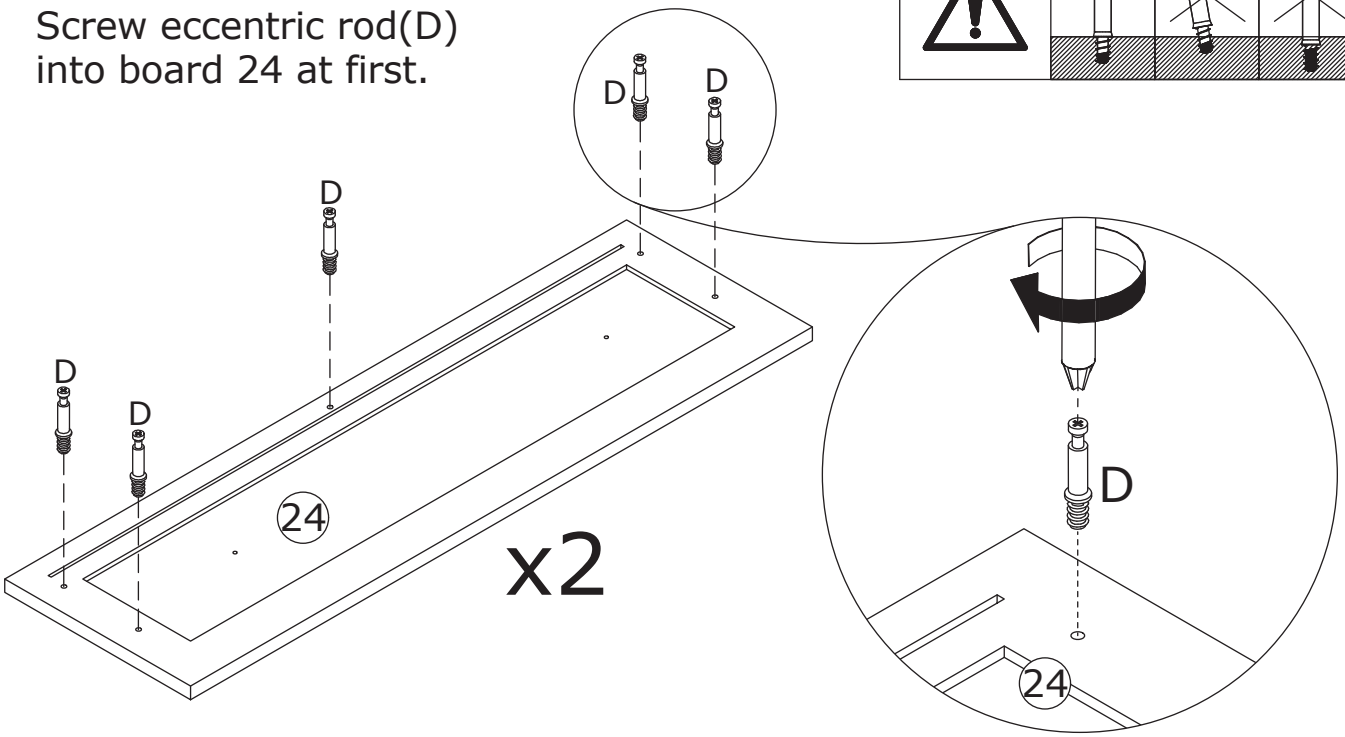

31

R x 4	T x 4	
	∅4 x 10mm	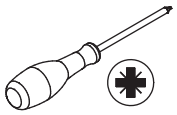

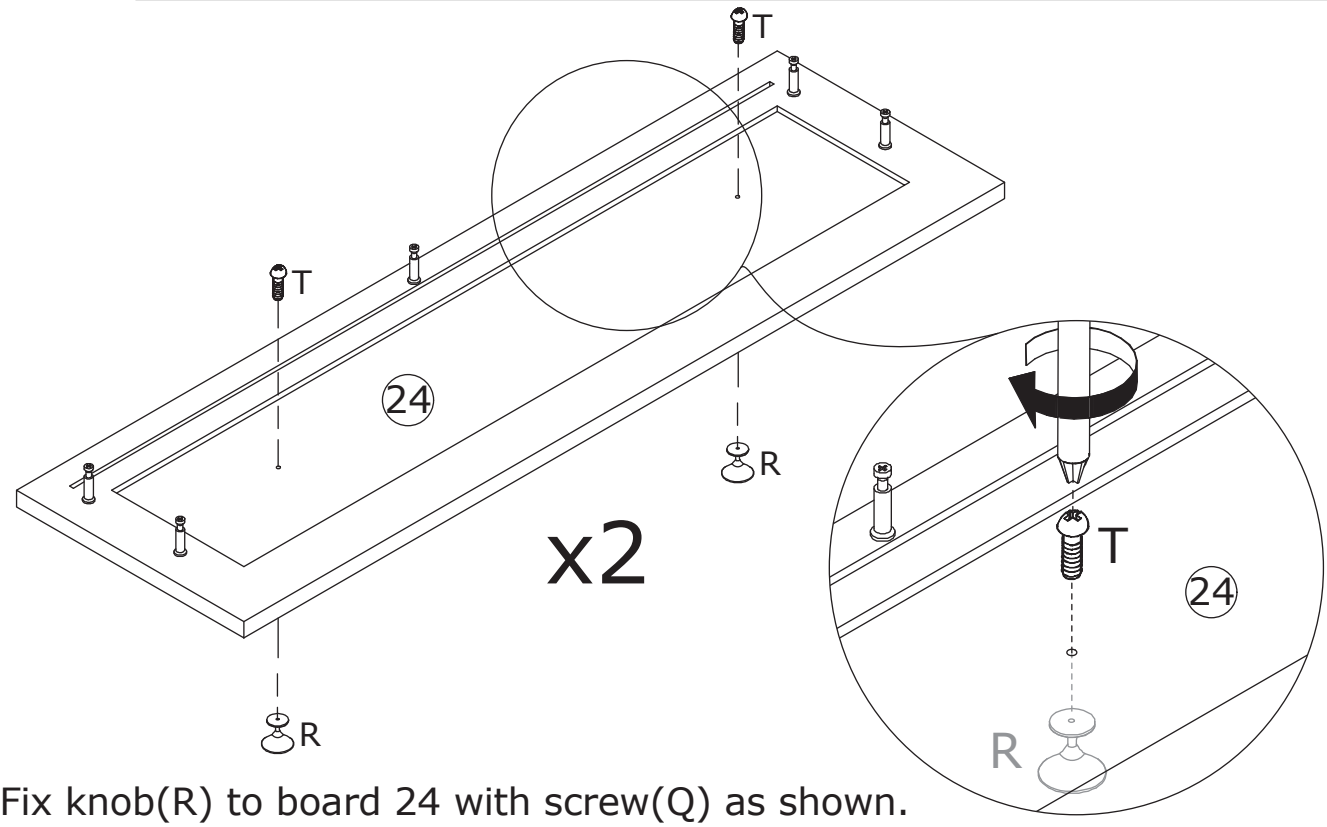

Fix knob(R) to board 24 with screw(Q) as shown.

32

B x 4	C x 12	
L = 350 mm	∅3 x 12 mm	

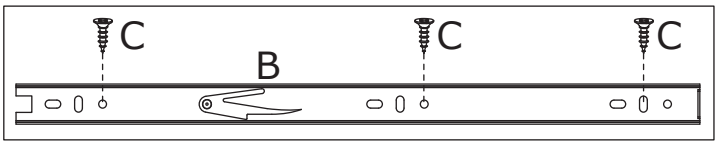

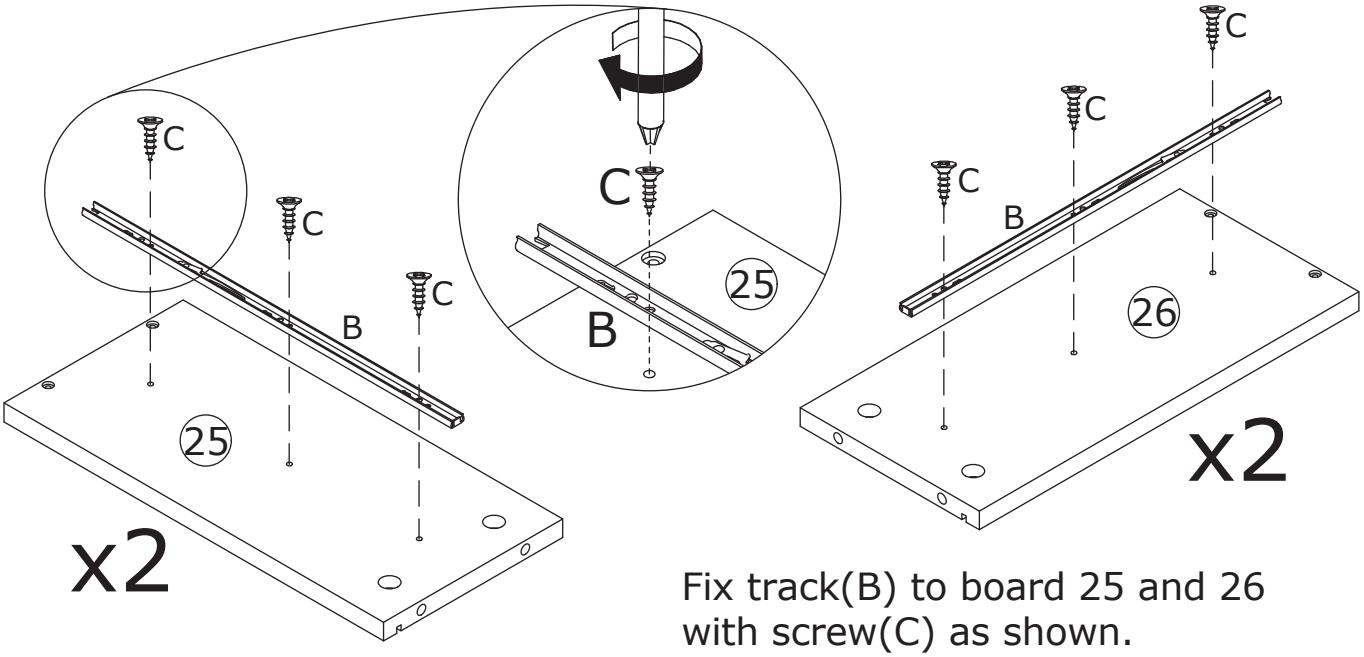

Fix track(B) to board 25 and 26 with screw(C) as shown.

33

J x 10	
∅4 x 35 mm	

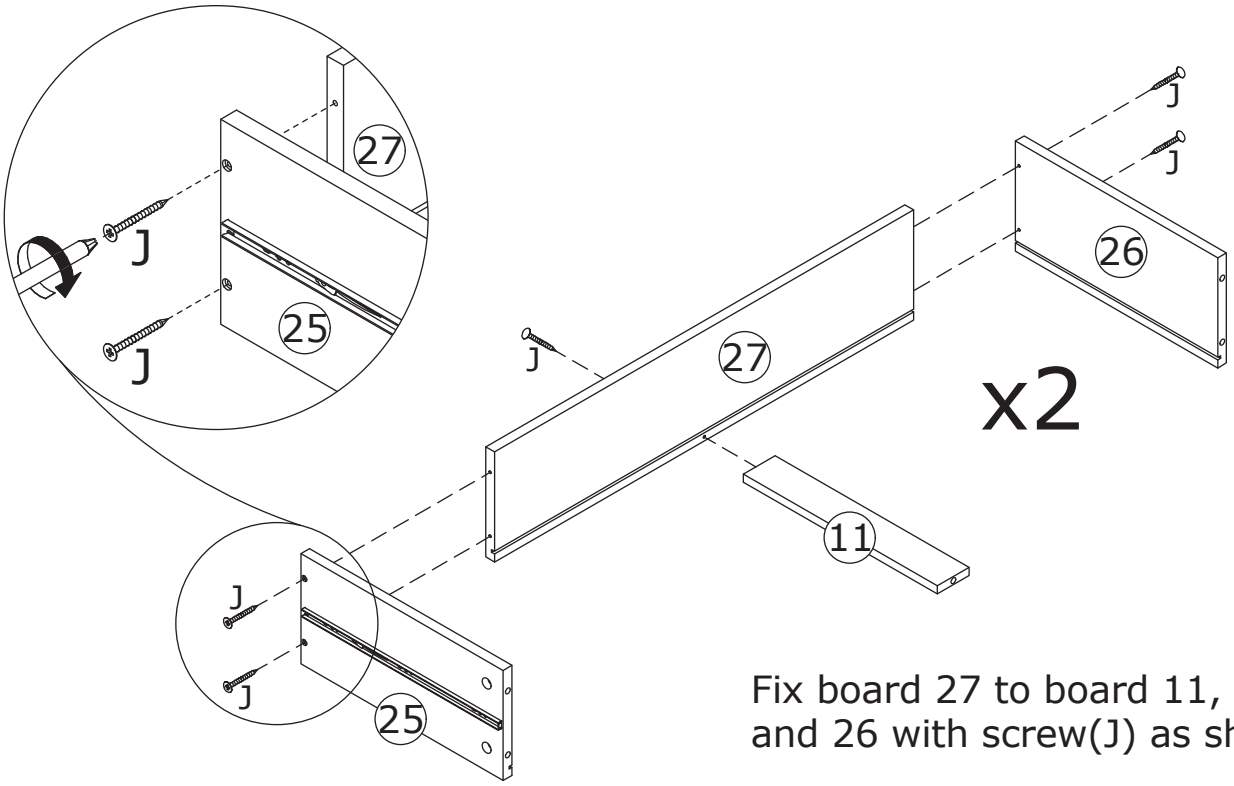

Fix board 27 to board 11, 25 and 26 with screw(J) as shown.

34

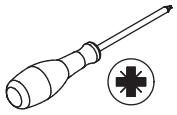

Insert back board 28
along grooves as shown.

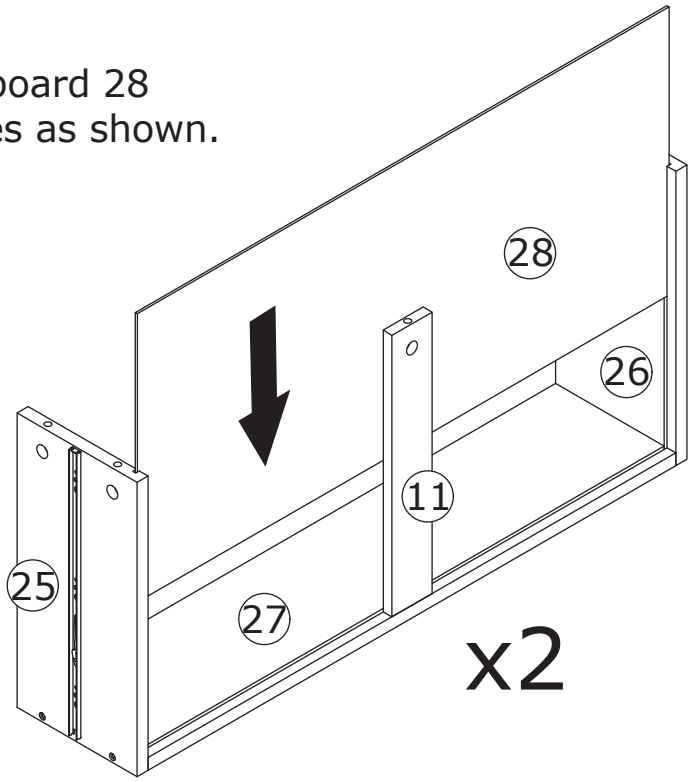

35

F x 10

∅15 x 10 mm

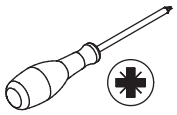

Attach board 24 to board 11, 25 and 26,
add cam lock(F) into and turn clockwise
to tighten as shown.

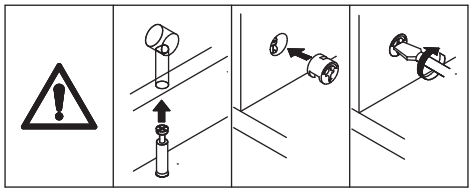

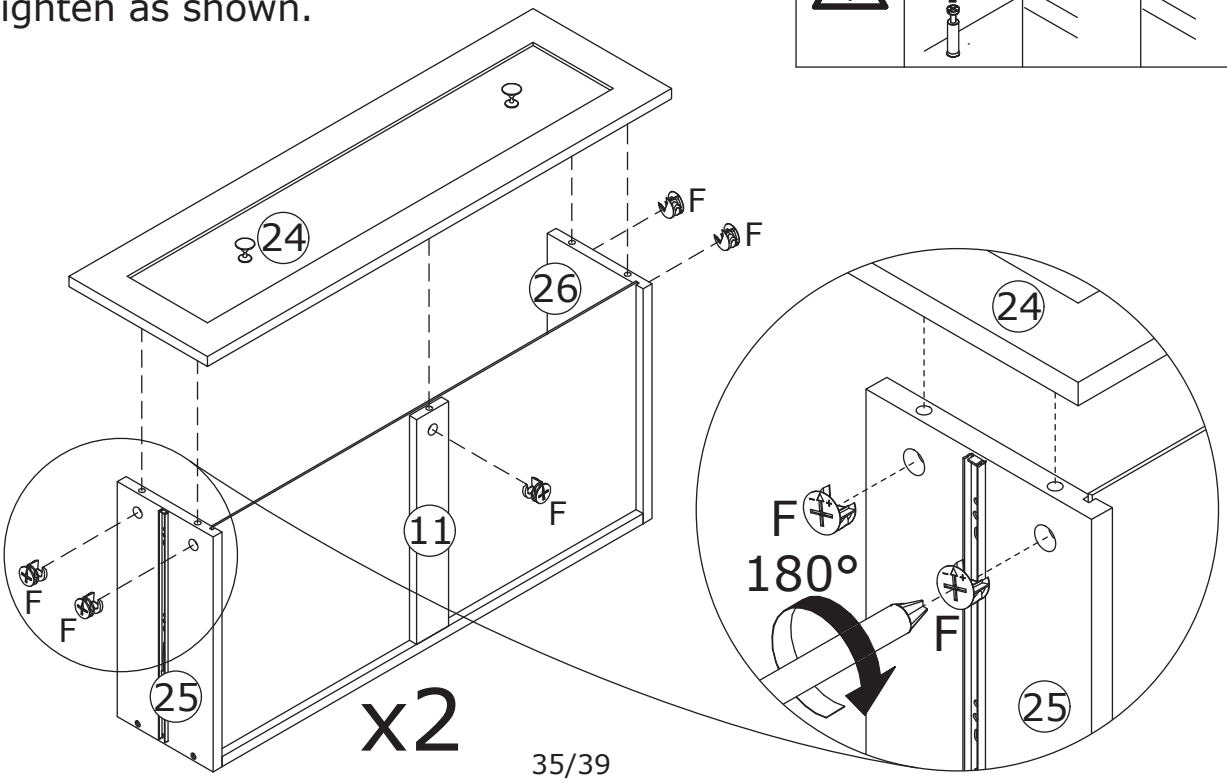

36

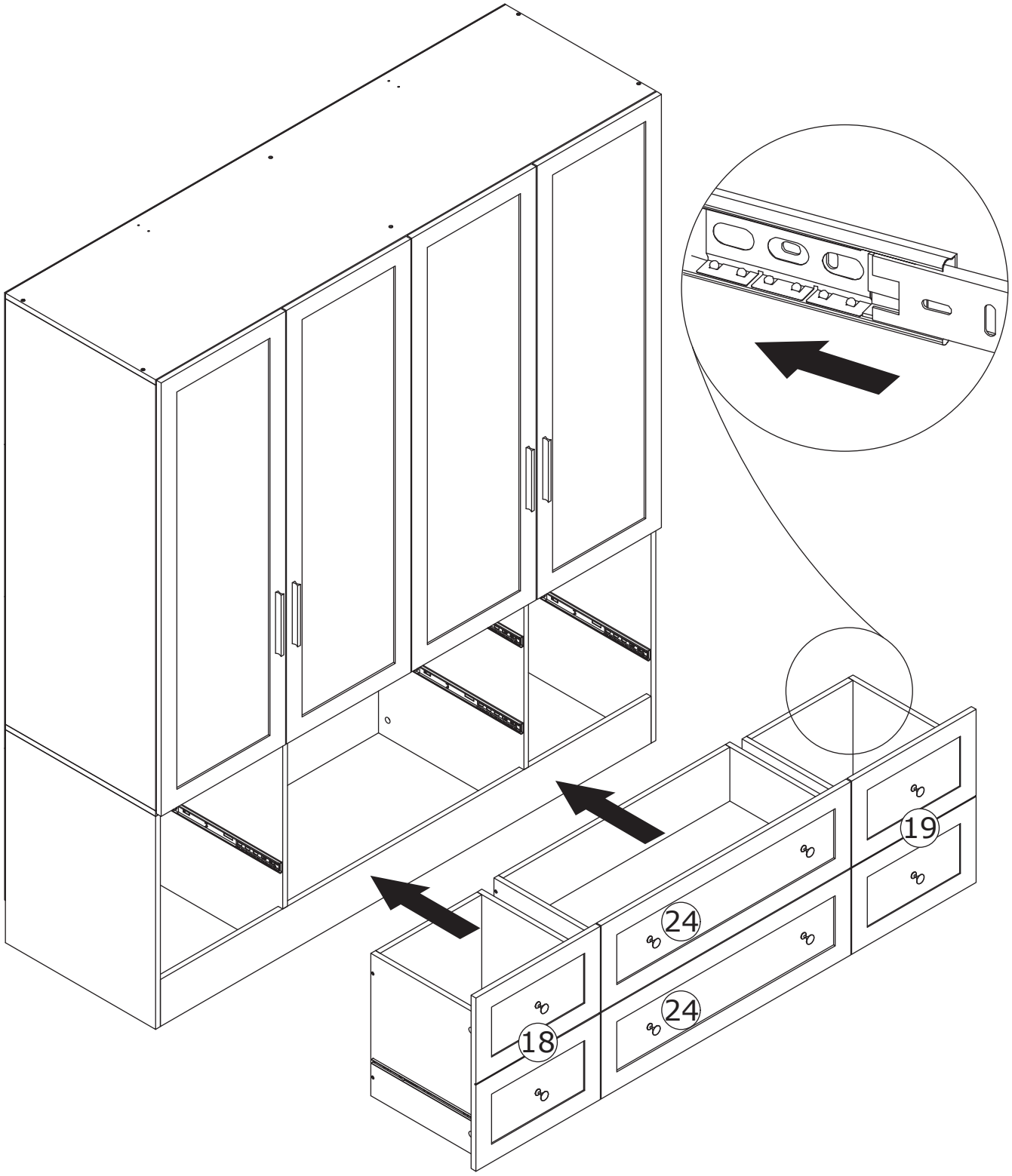

37

N x 4	U x 2	
∅4 x 14 mm	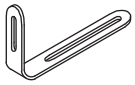	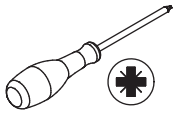

Fix part(U) to board 1
with screw(N) as shown.

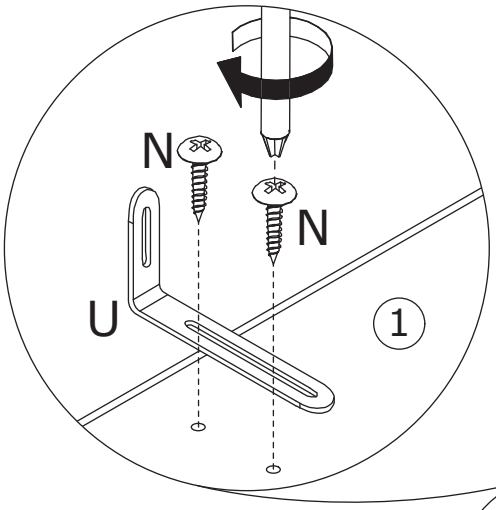

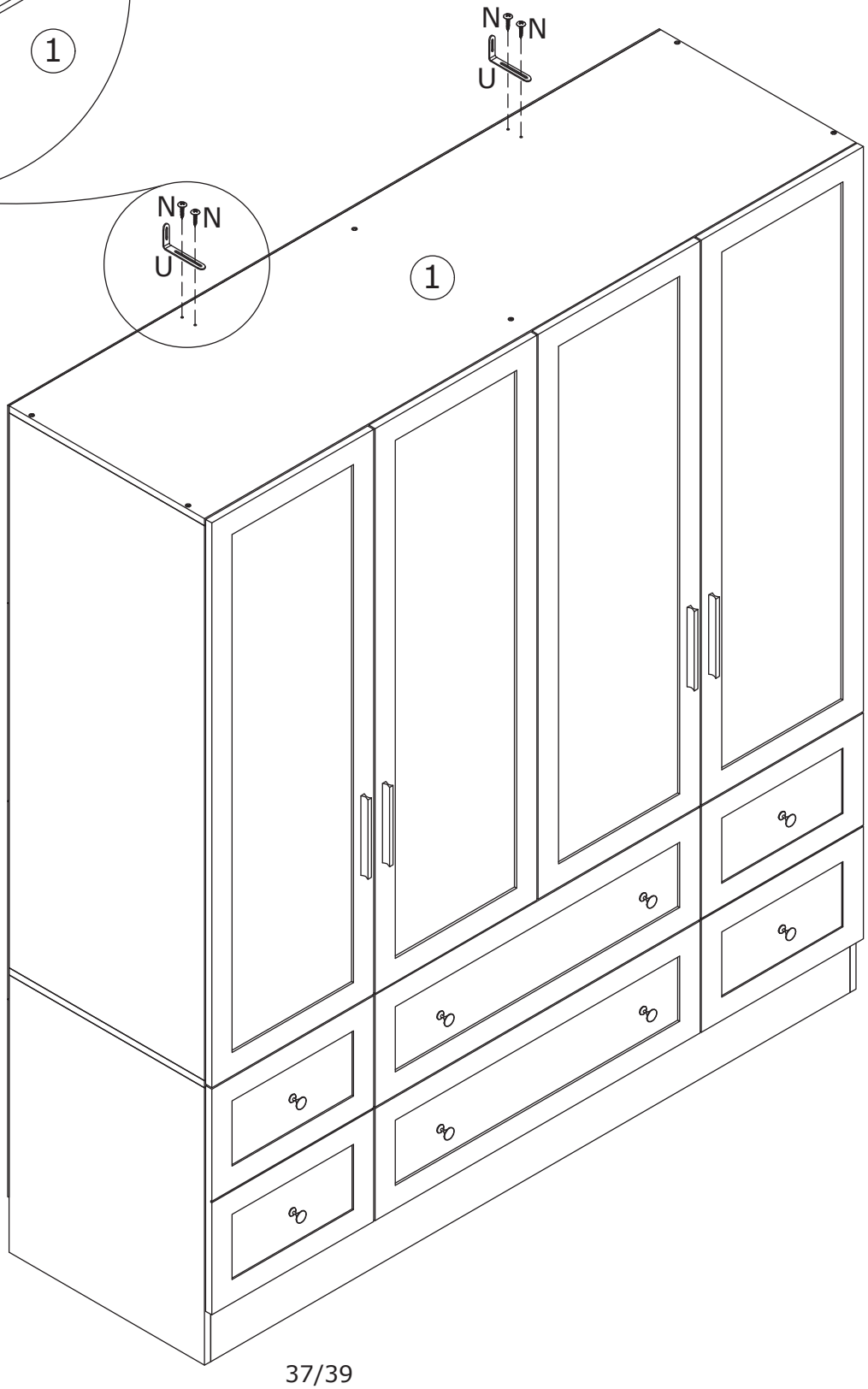

38

H x 2	S x 2	
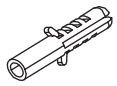	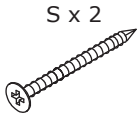 ∅4 x 40 mm	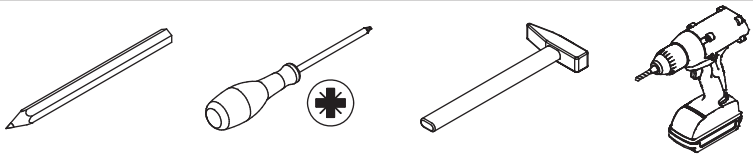

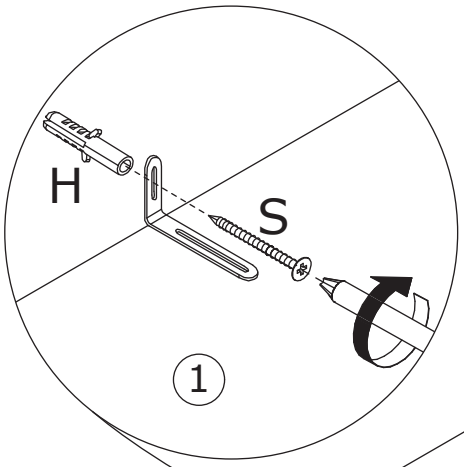

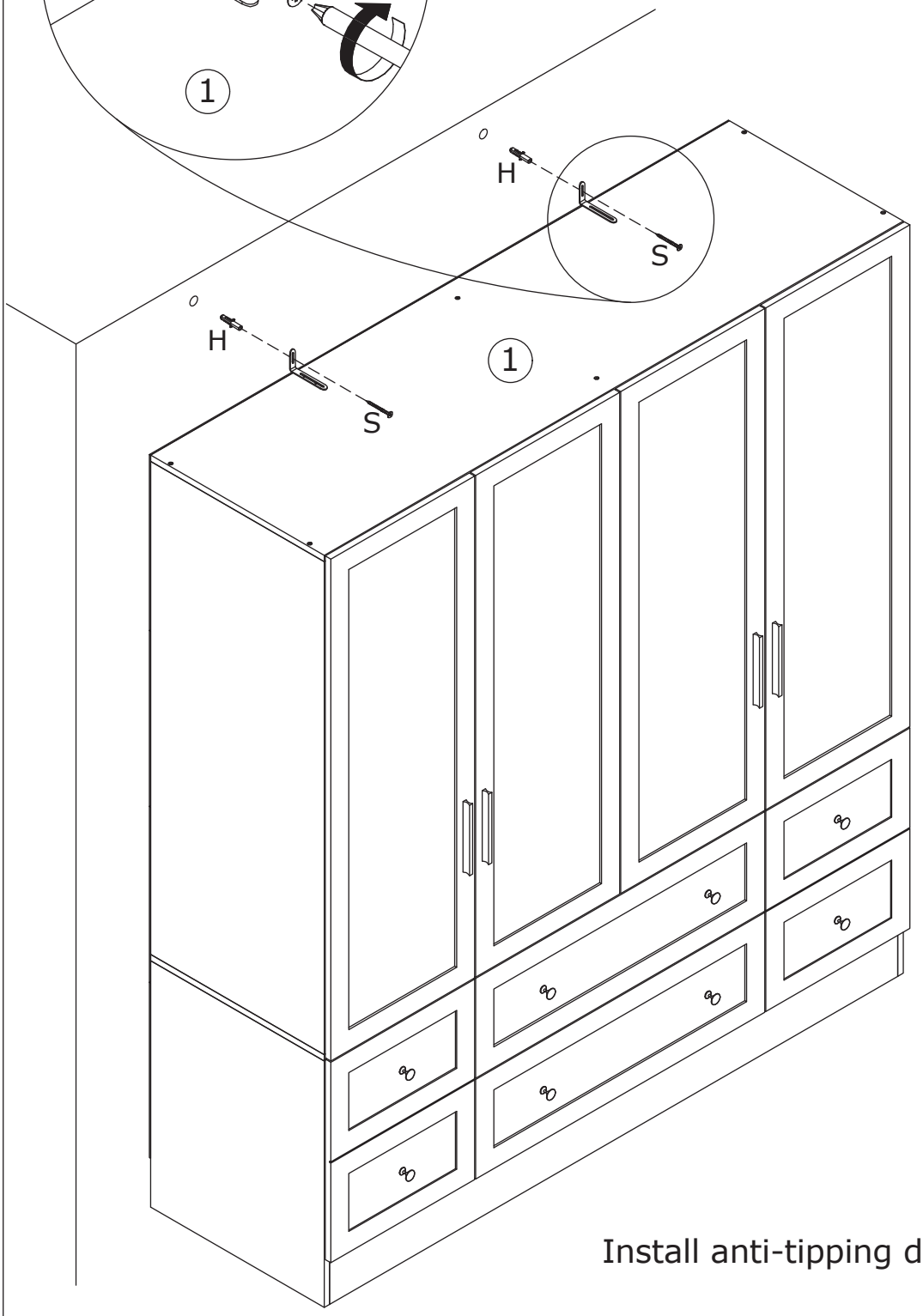

1.

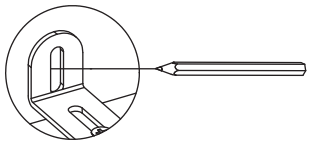

2.

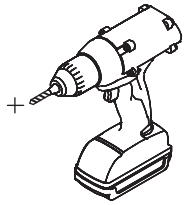

3.

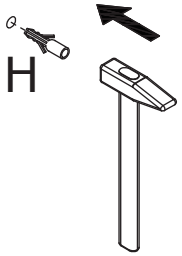

4.

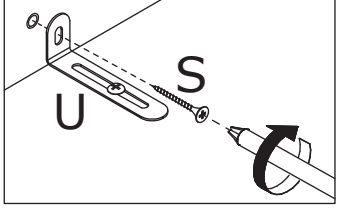

Install anti-tipping device as shown.

39

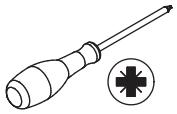

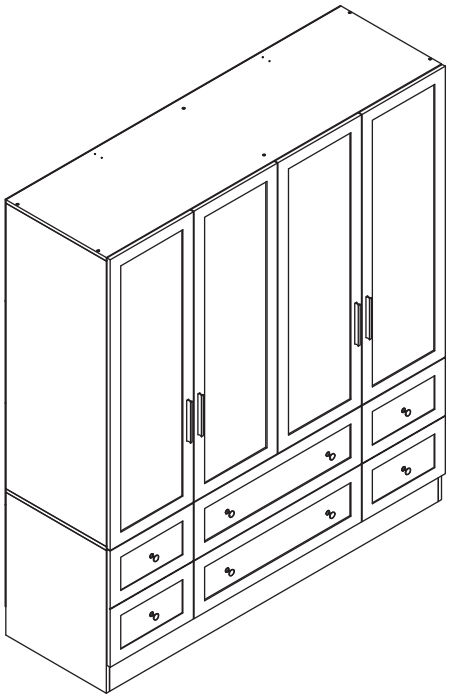

If doors are still not aligned if the hinges
are properly correctly, please watch the video.

https://youtu.be/n0Lb36SoODM

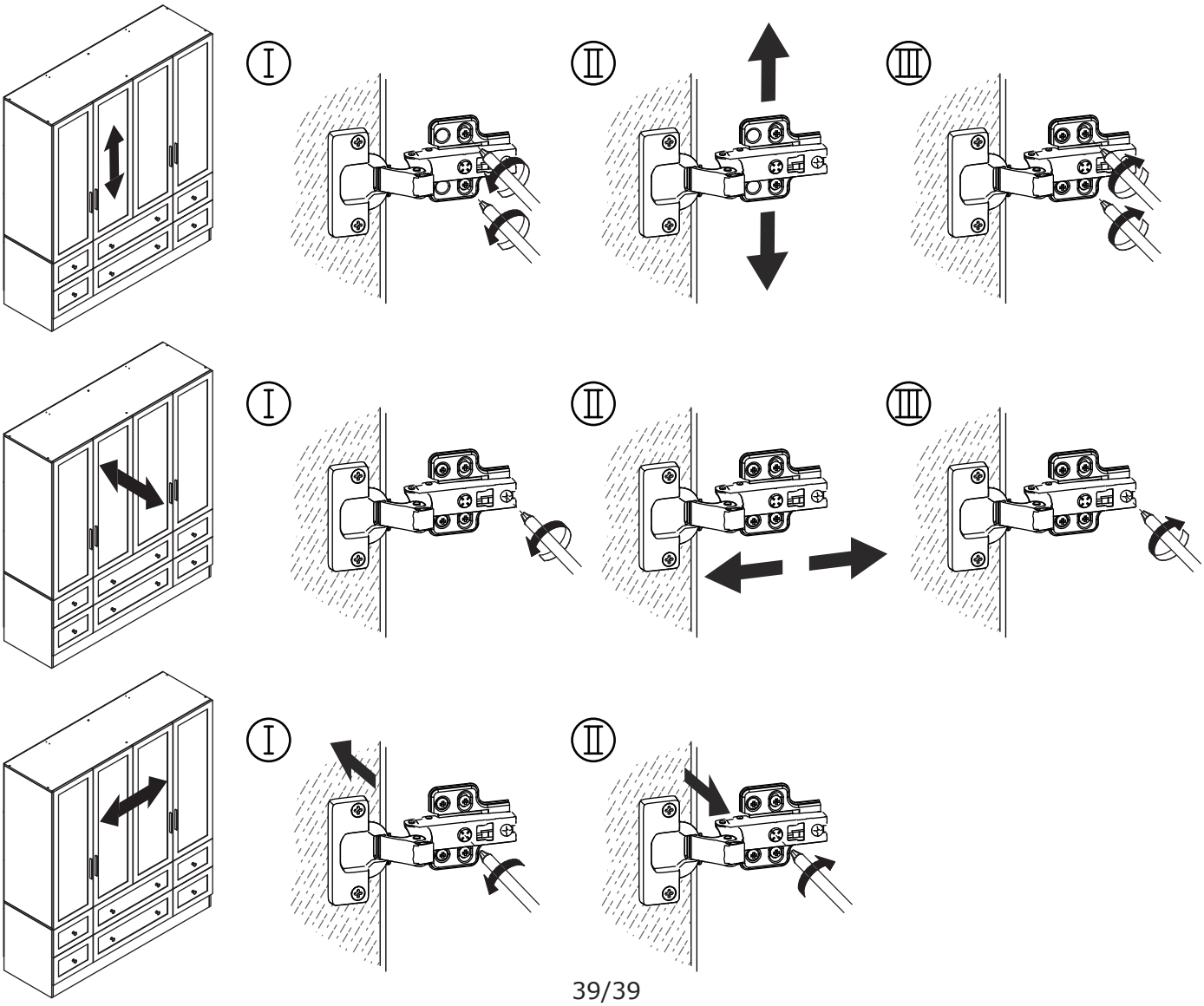

WARRANTY

WARRANTY CLAIMS

•There is a 30-day warranty for broken furniture or any other problems that do not work properly. The warranty will start from the date of purchase which must be verified by proof of purchase.

•Before making a claim, we may be able to answer your query, simply call us. Please leave your purchase order number, along with some details of the problem, if you want a replacement part. We will arrange within 48 hours. If there is out of stock, we will reply with a shipping date.

•The product must be used in accordance with the instructions provided. For health reasons.

•For other reasons, if the furniture needs to be returned, it must be cleaned and dried and operated within 30 days of receipt.

Type of Warranty Claim

•Failure to follow the furniture instructions will invalidate the warranty. Attention please.

•Does not include damage during installation, but includes damage during transportation.

Scope of responsibility

•Shall not bear any responsibility for misuse or user damage and / or loss of parts during the installation of furniture.

•After using, the damage and scratches of the furniture are not covered by the warranty.

The Warranty Relates to All Bought in The Us and Covers The Following Areas

•Sheet parts: 1 month from the date of purchase.

•Electrical parts: 1 month from the date of purchase.

RETURNS

CHANGED YOUR MIND AND NEED TO RETURN YOU ITEM?

PLEASE FOLLOW THE BELOW INSTRUCTIONS:

- If you have purchased and have simply changed your mind, follow the retailer's instructions for returns.

DEFECTIVE ITEMS

- If your item is defective in any way, i.e. it doesn't work but you can't identify why, in the first instance, please call us.

DAMAGED ITEMS

- If you receive an order with obvious shipping damage from the retailer, then we suggest the delivery is refused. If the delivery has been accepted and then shipping damage is found, please follow the specific instructions advised by the retailer.
  In all circumstances please save all packaging material and paperwork for the order. Please be aware that if you dispose of packaging material or attempt to return the merchandise without contacting the fulfiller, you jeopardise your chances of making a claim, and you may not receive a credit for the return.

AFTER-SALES CONTACT

feedbackstation@163.com

(303)800-6387