Product Specs Sheets

Cover Page

Urban 100

Features

- Bathroom Sink
- Made of Ceramic
- Ceramic White Finish
- With Overflow and Concealed (Hidden) Drain Assembly
- Wall Mount or Countertop (Vessel) Installation
- Available with One, Two, or No Faucet Hole
- Made in Italy

Related Items:

- PIL 027 | Concealed Drain
- WSBC 53922 | Decorative Trap

Finishes:

Ceramic White

SKU# | Options:

- Urban 100.00 | No Faucet Hole
- Urban 100.01 | Single Faucet Hole
- Urban 100.02 | Two Faucet Holes
- Available in Glossy Black (Special Order)

Codes & Standards:

•ADA Compliant

*** WS Bath Collections reserves the right to revise dimensions or information on this sheet without notice**

Collection |	**Model |**	Dimensions Metric	
Urban	Urban 100	*1 inch = 2.54 cm* *1 inch = 25.4 mm*	WS® BATH COLLECTIONS 1051 Lea Drive - Collegeville, PA 19426 Tel. 215 513 9400 - Fax 610 831 0215 www.wsbathcollections.com - info@wsbathcollections.com

Product Specs Sheets

Urban 100

collezione
collection

Urban 100

cod.URL02

Lavabo
wash basin

Dimensioni / *dimensions*

L 1005 - P 450 - H 80

Troppo pieno / *over floow* : No/ *Yes* CL

Peso netto / *net weight* :45 LBS

Appoggio / sit-on

Sospeso / wall-hung

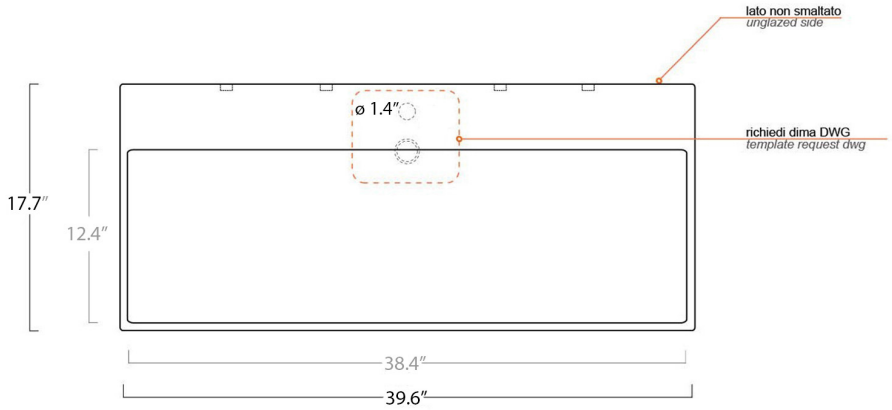

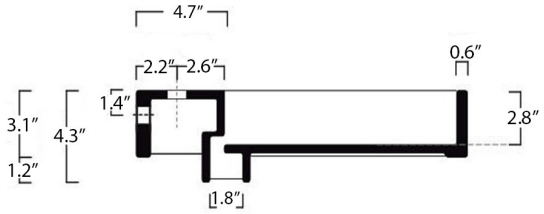

Piletta ad espansione
Hyde drain waste

PIL 027

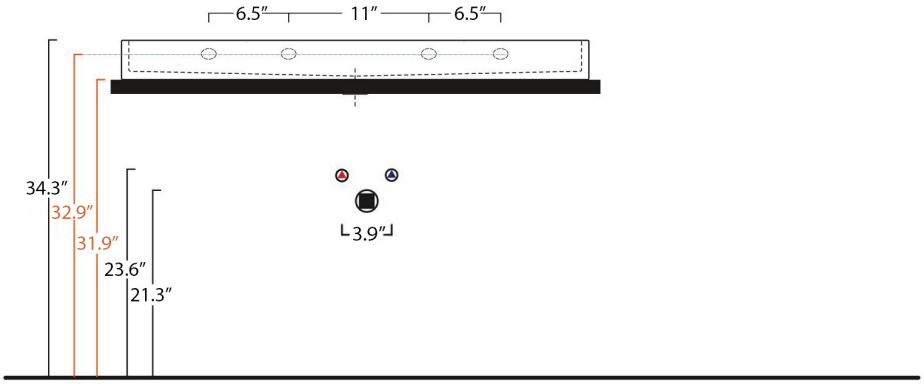

Collection Urban	**Model** | Urban 100	Dimensions Metric *1 inch = 2.54 cm* *1 inch = 25.4 mm*	WS® BATH COLLECTIONS 1051 Lea Drive - Collegeville, PA 19426 Tel. 215 513 9400 - Fax 610 831 0215 www.wsbathcollections.com - info@wsbathcollections.com

Product Specs Sheets

We recommend the following items that work with your sink.

Urban 100

TRAPS

WSBC 53922
Our best seller

Polished Chrome
WSBC 53922.29

Matte Black
WSBC 53922.22

WSBC 5392

Polished Chrome
WSBC 5392.29

WSBC 53925

Polished Chrome
WSBC 53925.29

WSBC 53921
Space saving

Polished Chrome
WSBC 53921.29

Matte Black
WSBC 53921.22

DRAINS

PIL 027
Concealed drain

MOUNTING HARDWARE

Wall-mount installation

Bolts

Vessel/ countertop installation

Silicone *(optional)*

Collection Urban	**Model** | Urban 100	Dimensions Metric *1 inch = 2.54 cm* *1 inch = 25.4 mm*	WS® BATH COLLECTIONS 1051 Lea Drive - Collegeville, PA 19426 Tel. 215 513 9400 - Fax 610 831 0215 www.wsbathcollections.com - info@wsbathcollections.com

Recommended ADA Installation

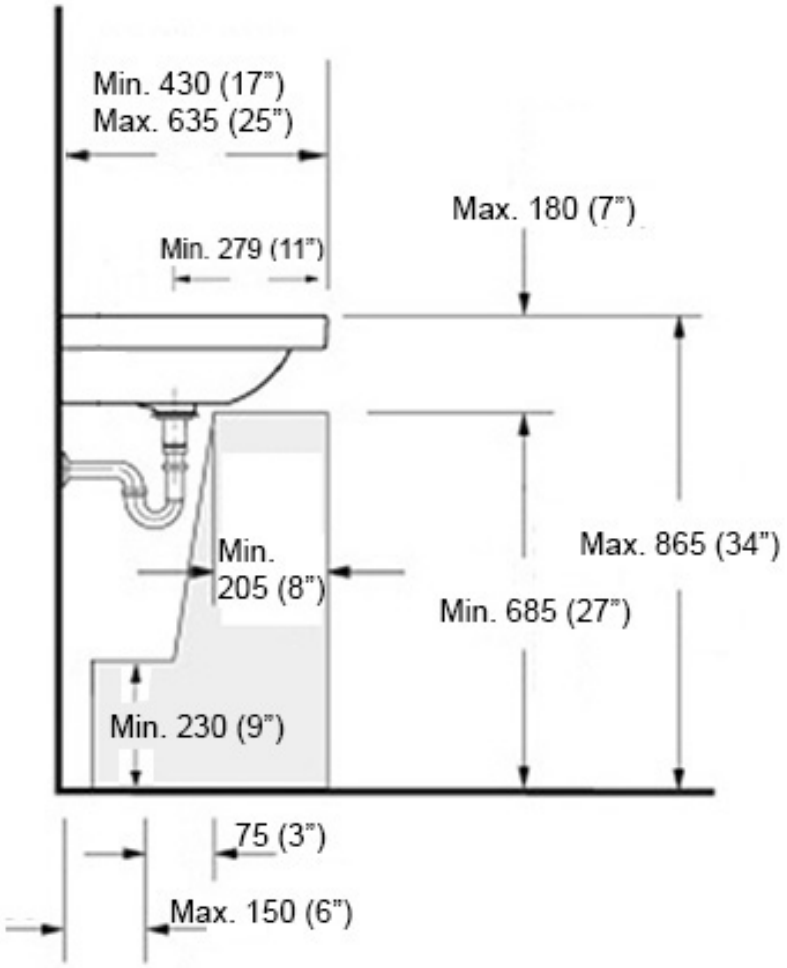

Note: ADA Compliant when installed in accordance with ADA guidelines

Collection	Model |	Dimensions Metric	
Urban	Urban 100	*1 inch = 2.54 cm* *1 inch = 25.4 mm*	WS® BATH COLLECTIONS 1051 Lea Drive - Collegeville, PA 19426 Tel. 215 513 9400 - Fax 610 831 0215 www.wsbathcollections.com - info@wsbathcollections.com