RVF1249
KITCHEN FAUCET

RUVATI®
SPECIFICATION SHEET



FEATURES

- Ceramic cartridge
- Solid brass construction
- Pull-out spray head with multi-function feature
- Includes hot and cold inlet hoses
  Standard 3/8″ compression fitting
- 1 hole installation (standard 1-3/8″ hole)

IN THE BOX

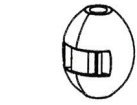

Spray Hose Weight



Allen Key

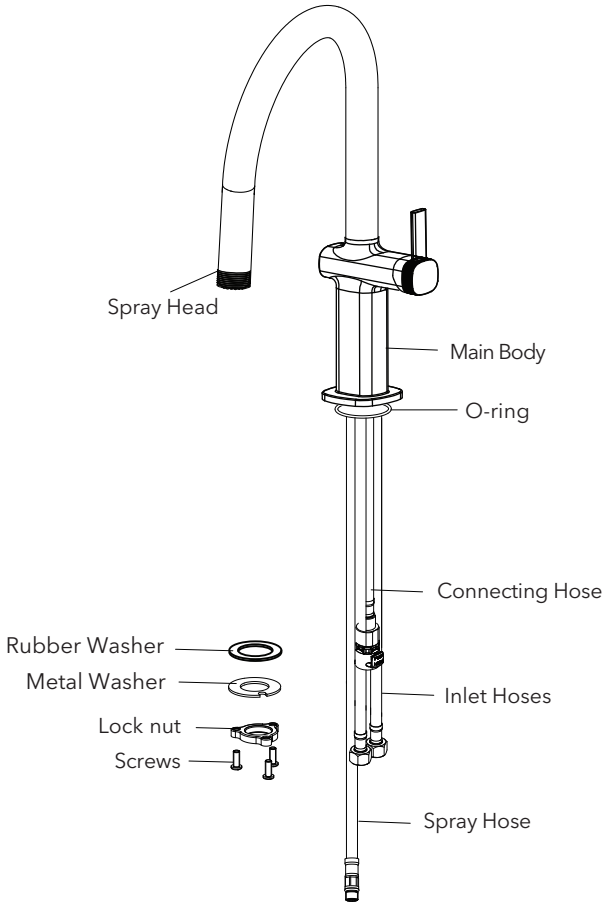

COLOR OPTIONS

- Brushed Nickel (BN)

DIMENSIONS

- Overall Height: 18″
- Spout Height: 10″
- Spout Reach: 9″

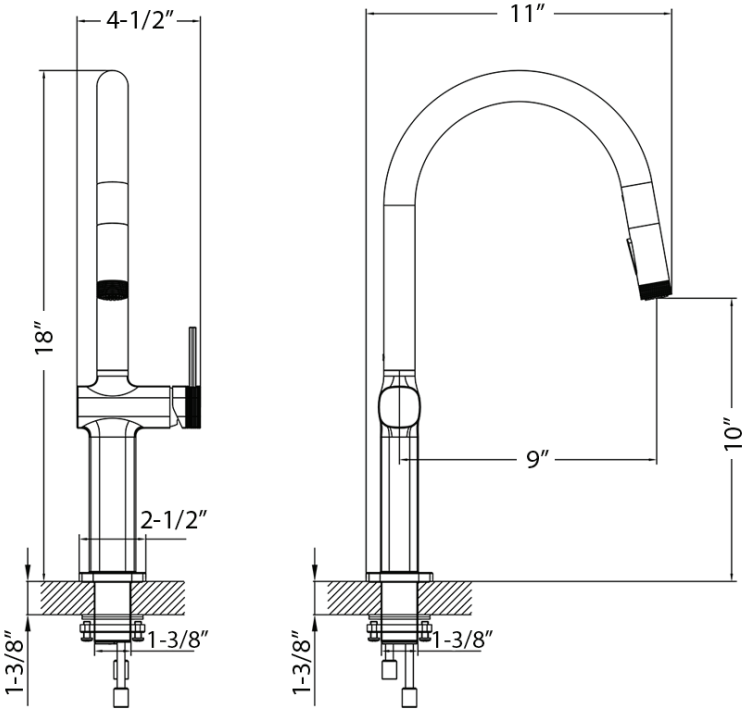

CODES / STANDARDS
CUPC CERTIFIED BY IAPMO
ASME A112.18.1/CSA B125.1
NSF/ANSI/CAN 61 & 372

ADA COMPLIANT
CALIFORNIA ENERGY COMMISSION
(CEC) AND CALGREEN, EPA WATERSENSE

SCAN TO REGISTER OR VISIT
WWW.RUVATI.COM/REGISTER

RUVATI USA
WWW.RUVATI.COM

PHONE: 1.855.478.8284
EMAIL: SUPPORT@RUVATI.COM