SPECS

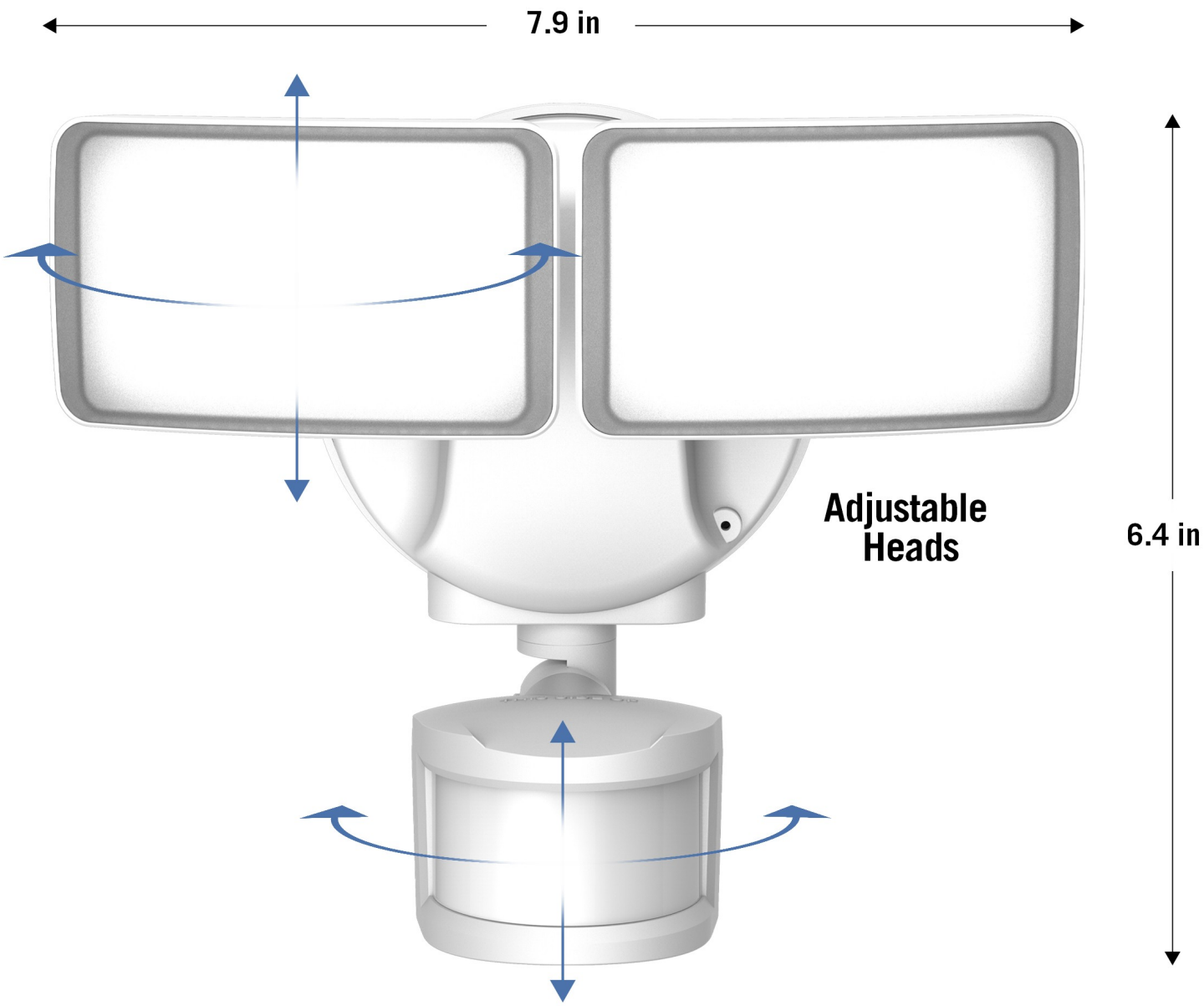

1000 LUMENS

DUSK TO DAWN

MOTION ACTIVATION

LED