Serial Number:BMV15-26
R1.0

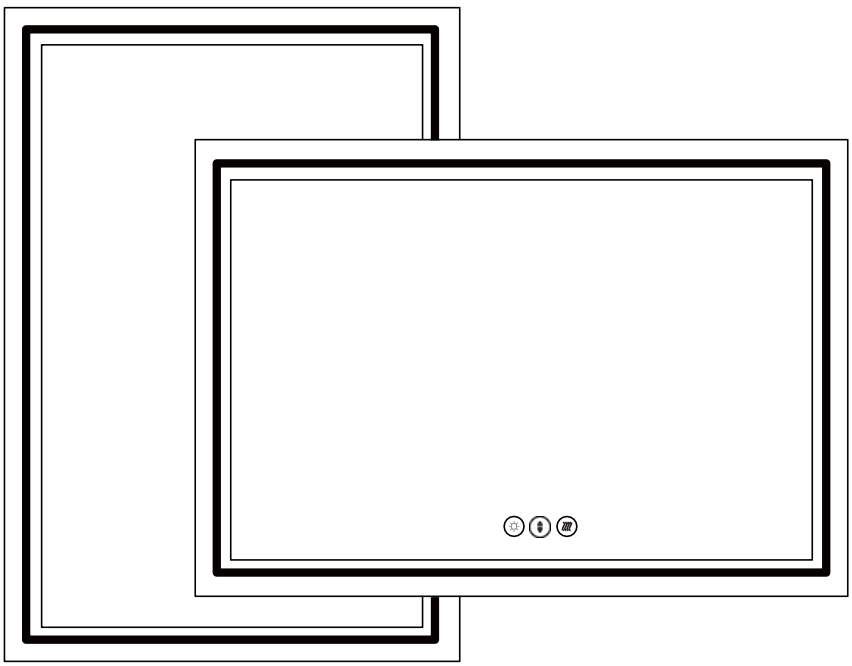

For Technical support or questions, please call us at + 1 888 020 3007.

Thank you very much for choosing our led lighted mirror. For your safety, it is very important that the following instructions are read carefully and completely before beginning the assembly and installation of this lighting fixture:

WARNING -TO REDUCE THE RISK OF BURNS, FIRE, ELECTRICAL SHOCK OR INJURY TO PERSONS:

1.It is strongly recommended that two or more adults install this led lighted mirror.
2.Disconnect power at the circuit breaker before putting on or taking off parts. To disconnect, turn all controls to the off position, then disconnect power from the AC/DC adaptor.
3.Use only power adaptor that was provided with this product. Using a different power adaptor will damage the lights and may cause fire, electrical shock hazard.
4.Always wear suitable eye protection before drilling.
5.Keep the voltages between 110V and 120V. If the voltage exceeds 120v, please use the transformer.
6.Use this furnishing only for its intended use as described in these instructions.Do not use attachments/accessories not recommended by the manufacturer.
7.Never operate this furnishing if it is not working properly or if it has been dropped or damaged, or dropped into water.
8.Do not use outdoors.FOR HOUSEHOLD AND INDOOR USE ONLY.
9.Do not operate where aerosol (spray) products are being used or where oxygen is being administered.
10.The appliance is not to be used by persons (including children) with reduced physical, sensory or mental capabilities, or lack of experience and knowledge, unless they have been given supervision or instruction. Children should be supervised to ensure that they do not play with the appliance.

⚠ CAUTION:

1.Risk of Electrical Shock – Connect this furnishing to a properly grounded outlet only.
2.Grounding Instructions: This product must be connected to a grounded metal, permanent wiring system, or an equipment-grounding conductor must be run with the circuit conductors and connected to the equipment-grounding terminal or lead on the product.

Hotline: +1 302 336 8180

PRE-ASSEMBLY ATTENTIONS:

1.After opening the package, please inspect the product immediately for any damage during transit or missing parts.
2.Remove all parts and hardware from the box along with any plastic protective packaging.
3.Do not discard any contents until after installation is complete to avoid accidentally discarding small parts or hardware.
4.Before drilling, please ensure there are no hidden cables or pipes (water, gas, or electrical) behind hanging points.

What's in the box

No.	Description	Draw	QTY.(pcs)
A	Led Lighted Mirror	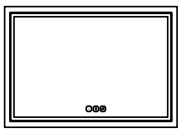	1
B	Top Mounting Bracket	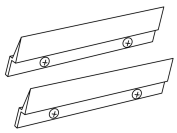	Ref. to Page 6
C	Phillips Flat Head wood Screws	 Short  Long	Ref. to Page 7
D	Wall Anchor	 A  B	Ref. to Page 7
E	Hole Positioning Sketch		1

TOOLS (not included)

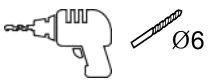

Electric Drill


Working Gloves


Tape Measure


Marker


Phillips-head screwdriver

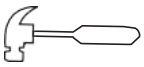
Hammer


Safety Goggles


Level Ruler

Hotline: +1 302 336 8180

Secure it! Wall Anchoring Guide

This mirror must be securely attached to the wall. The hardware used to secure your mirror to the wall depends on your wall material. If your wall material is not listed or if you have any questions, consult with a local hardware retailer.

This manual provides installation instructions for Masonry (concrete or brick Mortar) as an example.

WALL MATERIAL
Masonry (concrete or brick Mortar)

ANCHORING DEVICE
Plug with screw.
(Short Screw & Anchor A)

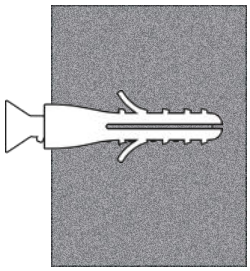

WALL MATERIAL
Drywall or plaster with available wood stud

ANCHORING DEVICE
Screw inserted directly into stud or plug with screw.
(Short Screw & Anchor A)

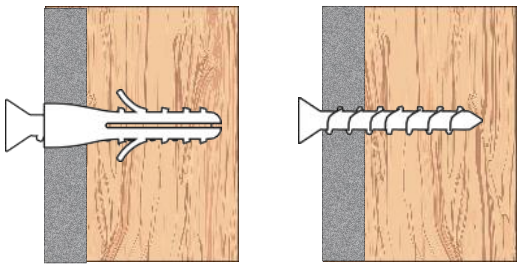

WALL MATERIAL
1.Drywall without available wood stud
2.Hollow Wall

ANCHORING DEVICE
Screw inserted directly into stud or plug with screw.
(Long Screw & Anchor B)

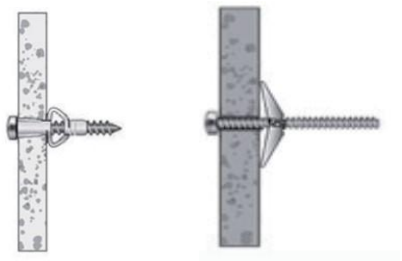

Safety First! Wire Connection Guide

There are two ways to connect the power. You can connect the wires directly to your junction box or insert the plug directly into the wall socket.

- Grounding Instructions: This product must be connected to a grounded metal permanent wiring system or an equipment-grounding conductor must be run with the circuit conductors and connected to the equipment grounding terminal or lead on the product.

PLUG IN

Insert the plug to the socket

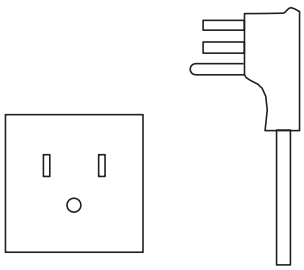

HARDWIRED

Cut the electric wire and make connection with junction box.

DEVICE

Junction box (not included).

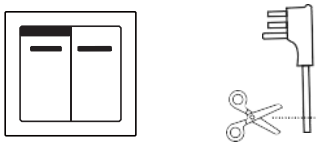

DANGER: Before installation, make sure the main power is cut off.

HOW TO CONNECT THE WIRES

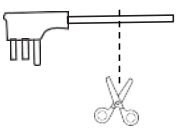

BLACK WIRE --- POWER SUPPLY L (LINE) WHITE WIRE --- POWER SUPPLY N (NEUTRAL) GREEN WIRE --- POWER SUPPLY G (GROUND)

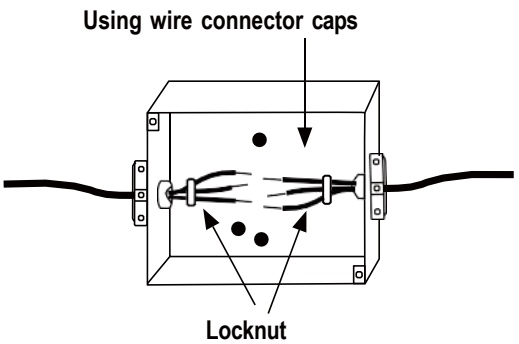

★ junction box is not included ★

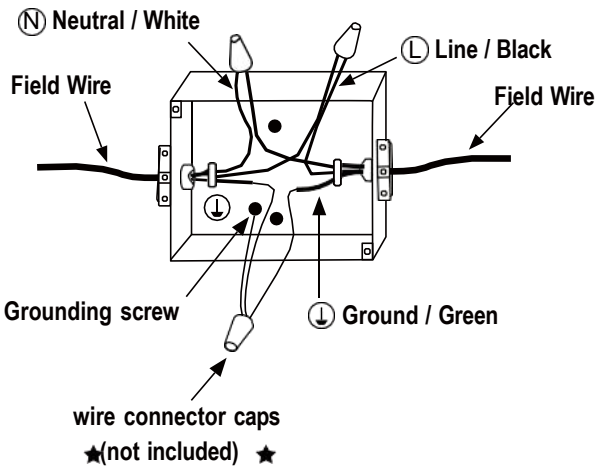

EASY TO INSTALLA TION

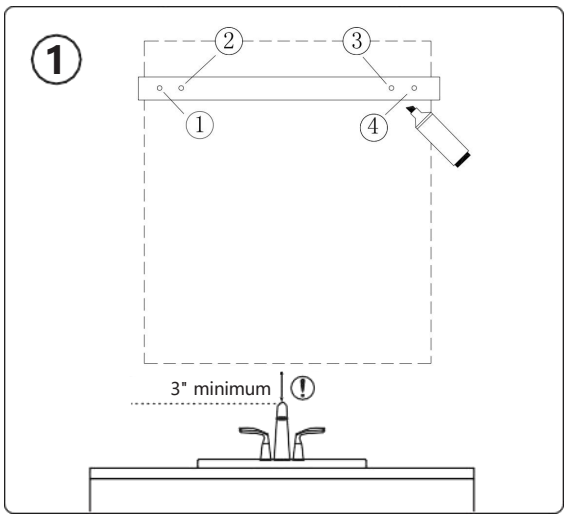

- Attach the hole-positioning masking tape to the wall using masking tape.
- Use proper level to ensure the tape is aligned horizontally.
- Gently puncture the hole map at each hole position using a Phillips-head screw-driver, marking the points on the wall.
(Be careful not to drill directly through the map, as it can cause wrinkles and affect the accuracy of the hole positions.)

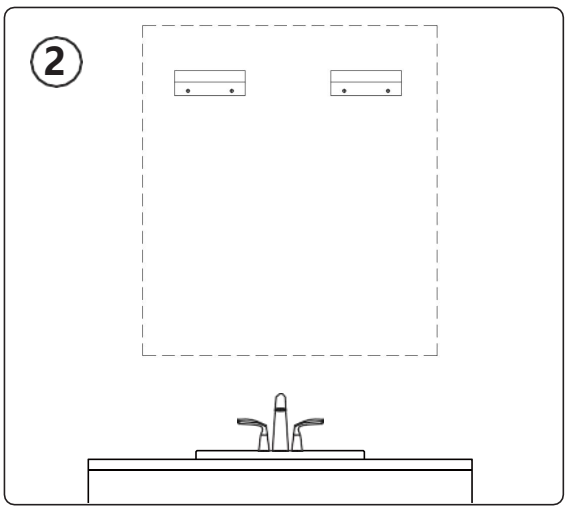

- Remove the hole positioning sketch.
- Verify if the Phillips-head screwdriver marks align accurately with the actual hole positions on the top mounting bracket.
- Ensure the hole position is accurate and level.

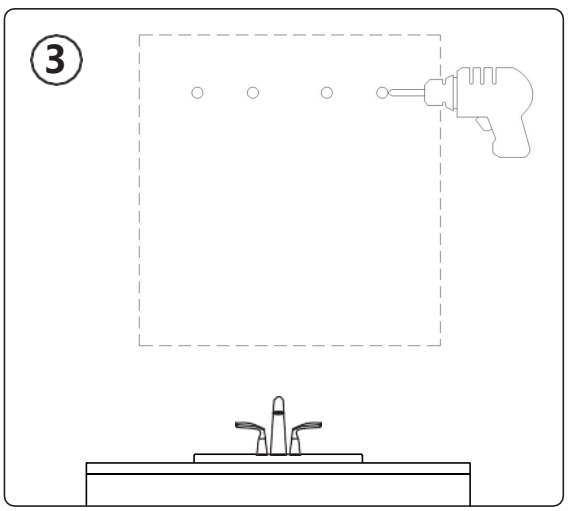

- Drill holes in the wall.
(drill bit in 8mm（5/16”）,drilling depth in 50mm（1-15/16”))

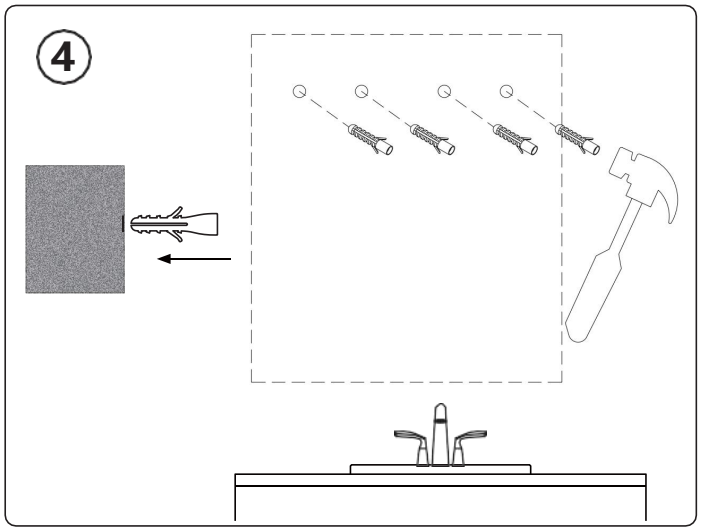

- Plug the Wall Anchors A into the holes.

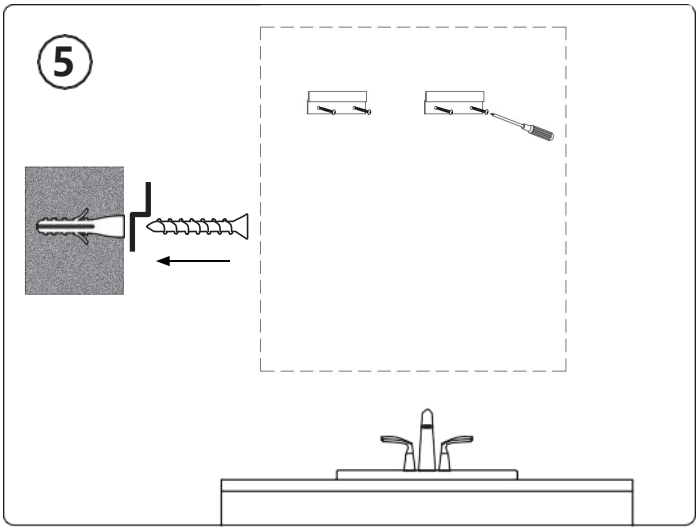

- Fasten the mounting bracket to the wall with short screws.

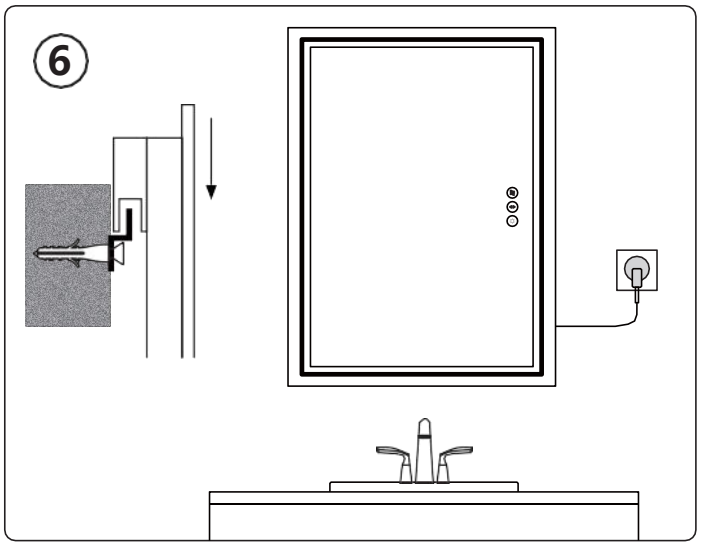

- Connect the power supply. (ref. to page 5)
- 2 adults to hang the mirror.

Operating Manual

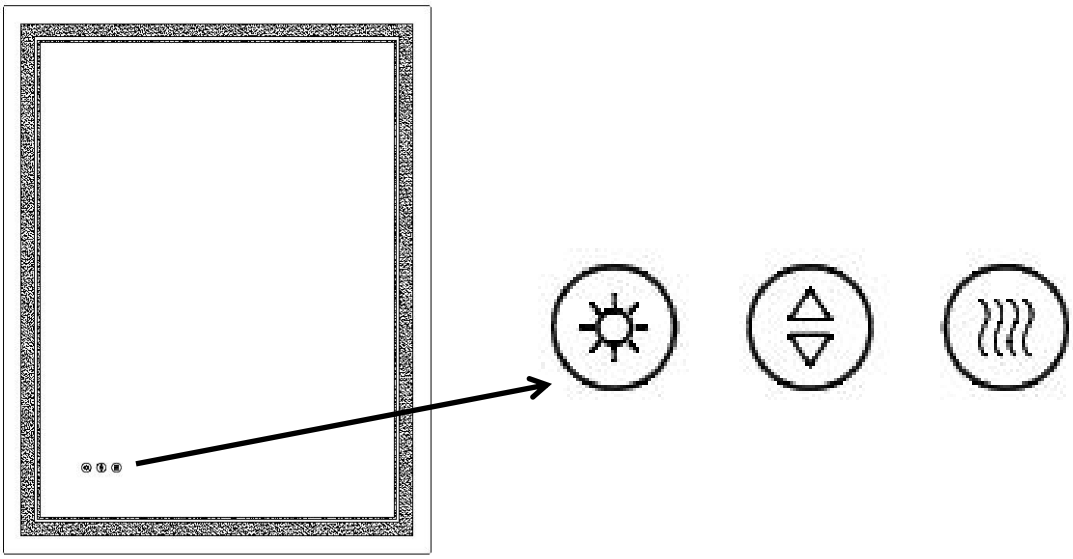

The buttons turn blue when connected to the main power supply and turn white after a brief touch.



- **Briefly touch the button to turn the mirror on or off.**
- **the button to change the color temperature among the 3000K,4000K and 6000K when the light is on.**
- **Press and hold the button to change the color temperature when the mirror is on.**
- **Optional to be wired to wall switch by ON/OFF memory function.**



- **Press and hold the button to adjust the brightness.**
- **Release the button when the brightness reaches your desired level**





- **The mirror begins to warm up and defog after you press the defogger button.**
- **Press the button again to turn off the anti-fog function.**
- **Press and hold the button to turn the blue backlight on or off.**
- **Note: To prevent damage from prolonged high temperatures, the defogger will automatically stop after 60 minutes of continuous operation.**

Dimension	Size (mm)	Input Power	Input Current	Defog Size (mm)	Mounting Bracket (mm)	No. of Top Mounting Bracket	No. of Screws & Wall Anchor for Bracket (Set)
20"*28"	510*710*28	24W	1A	250*250	100	2	5
24"*32"	610*810*28	40W	1.67A	300*400	100	2	5
24"*36"	610*910*28	40W	1.67A	300*400	100	2	5
28"*36"	710*910*28	40W	1.67A	300*400	100	2	5
30"*36"	760*910*28	40W	1.67A	300*400	100	2	5
36"*36"	910*910*28	40W	1.67A	500*350	100	2	5
40"*24"	1010*610*28	40W	1.67A	300*400	100	2	5
40"*32"	1010*810*28	40W	1.67A	350*500	100	2	5
48"*32"	1210*810*28	40W	1.67A	350*500	100	2	5
48"*36"	1210*910*28	60W	2.5A	350*500	100	2	5
55"*30"	1390*760*28	60W	2.5A	800*350	200	2	5
60"*28"	1520*710*28	60W	2.5A	800*300	200	2	5
60"*36"	1520*910*28	60W	2.5A	800*350	200	2	5
72"*32"	1820*810*28	60W	2.5A	1000*350	200	2	5
72"*36"	1820*910*28	60W	2.5A	1000*350	200	2	5
84"*32"	2130*810*28	60W	2.5A	1200*350	200	2	5
84"*40"	2130*1010*28	80W	3.33A	1200*350	200	2	5
96"*36"	2430*910*28	80W	3.33A	1500*350	200	2	5
96"*48"	2430*1210*28	80W	3.33A	1500*350	200	2	5

OTHER SPECIFICATION:

PARAMETER	SPECIFICATION
Stepless Dimming	10%-100%
Color Temperature	3000K/4000K/6000K
LED Light Quantities	120pcs/M
LED Life Span	50,000 hours
CRI	90+
Anti-fog	YES
Memory Function	YES
Tempered Glass	YES
Lighting Lens Material	PVC
Input Voltage	120V AC
Output Voltage	24V DC
Working Temperature	-20 ~ +50℃
Wiring Method	Hardwired/Plug in
Switch	Touch Sensor

WARRANTY:

If under normal use and for the full time period, your product fails to operate, please contact us. We will be glad to solve the problem for you!

CARE & CLEANING:

1.Use a household liquid glass cleaner to keep the mirror surface clean.
2.Do not use abrasive cleaners containing ammonia.

Hotline: +1 302 336 8180