NOTICE

*Please make sure that you heve all parts indicited and they are in good condition before you begin assembly of this item. Refer to part list and hardware list below for guidence.
*This item should be assembled on a soft surface to prevent scratching the finish during assembly.
*This item may require periodic tightenning.
*If you are having difficulty, our friendly Customer Care team is always here to help. Please email customersupport@safavieh.com.

PREPARATION

* Before beginnning assembly of product, make sure all parts are present. Compare parts with part contents list and hardware contents list.
* If any part is missing or damged,do not attempt to assemble the product.
* Estimated Assembly Time: 10 minutes.
* Tools Required for Assembly (included): Allen Key

CARE AND MAINTENANCE

Store outdoor furniture indoors or cover well when not in use. Dust regularly with small brush or vacuum. Spills should be taken care of immediately before they harden or stain with a slightly damped sponge.

SAFAVIEH OUTDOOR

Model# PAT7094
Product Dimensions:25.6" W x 36.6" D x 31.9"H

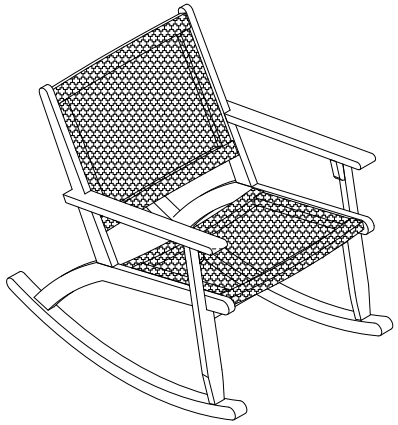

WARNING

Weight Capacity : 220 **lbs**
Warning : Do not stand on chair
Warning : Do not over torque bolts / screws

Part List and Hardware List

PIECE	DESCRIPTION	PICTURE	QUANTITY
A	Right Leg Panel		1X
B	Left Leg Panel		1X
C	Seat frame		1X
D	Back Frame		1X
E	Cross bar of leg	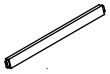	1X

PIECE	DESCRIPTION	PICTURE	QUANTITY
HW1	Screw: M6 x0.5 x60 mm	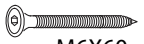 M6X60	8X
HW2	Screw: M6 x0.5 x 45 mm	 M6X45	2X
HW3	Allen key 4		1X

PREPARATION

*Before beginning assembly of product, make sure all parts are present. Compare parts with package contents list and hardware contents list.
*If any part is missing or damaged, do not attempt to assemble the product.
* Estimated Assembly Time : 10 minutes.
* Tools Requied for Assembly (included): Allen Key
* If you are having dificulty, our friendly Customer care team is always here to help. Please email customersupport@safavieh.com

1

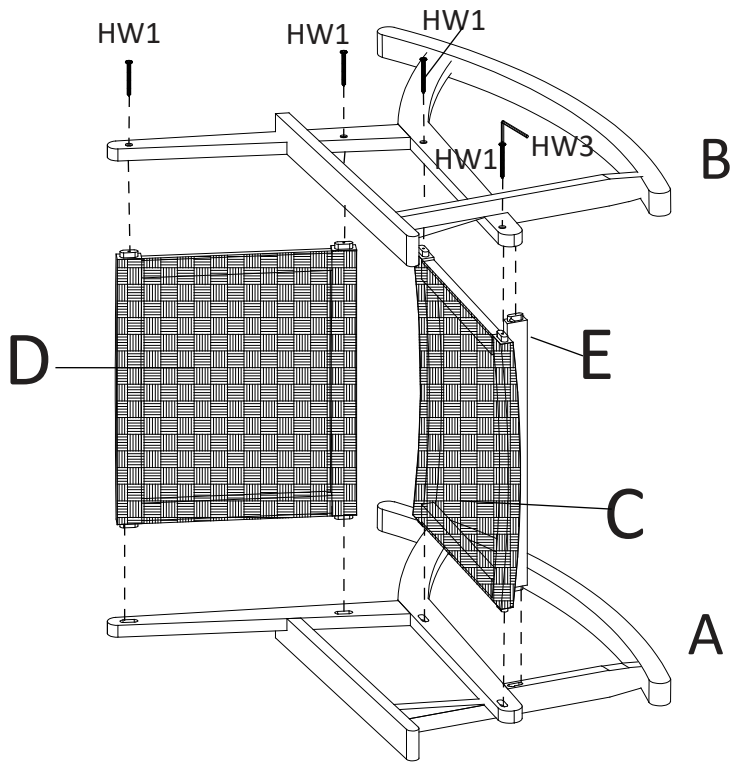

2

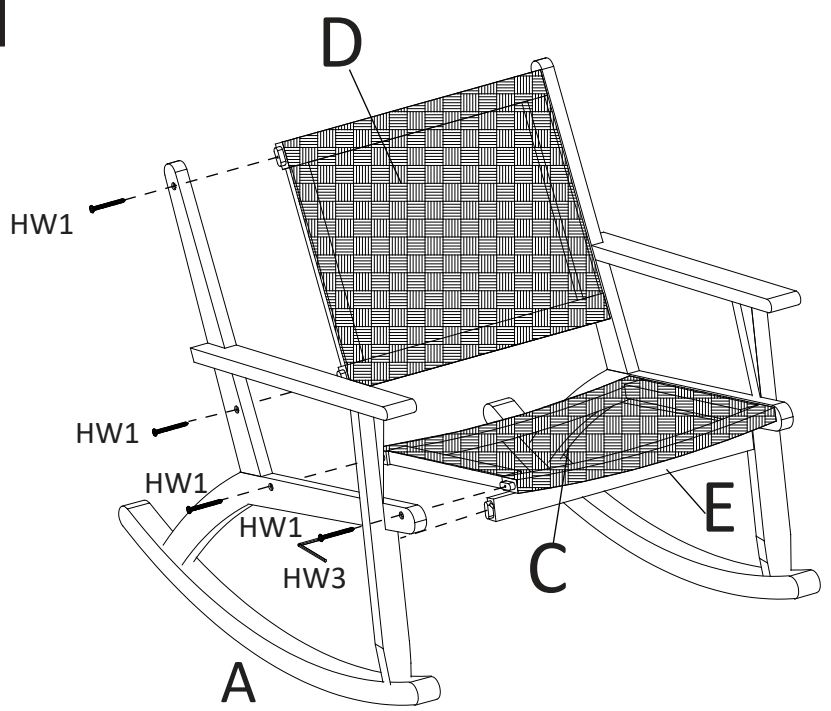

Step 1

Attach Left leg Panel(B) and Right Leg panel(A)to back frame (D) ,
Seat frame (C), Cross bar of leg(E), use screws (HW1),
tighten with allen key (HW3).

Step 2

Right Leg panel(A)to back frame (D) ,
Seat frame (C), Cross bar of leg(E), use screws (HW1),
tighten with allen key (HW3).

PREPARATION

*Before beginning assembly of product, make sure all parts are present. Compare parts with package contents list and hardware contents list.
*If any part is missing or damaged, do not attempt to assemble the product.
* Estimated Assembly Time : 10 minutes.
* Tools Requied for Assembly (included): Allen Key
* If you are having dificulty, our friendly Customer care team is always here to help. Please email customersupport@safavieh.com

3

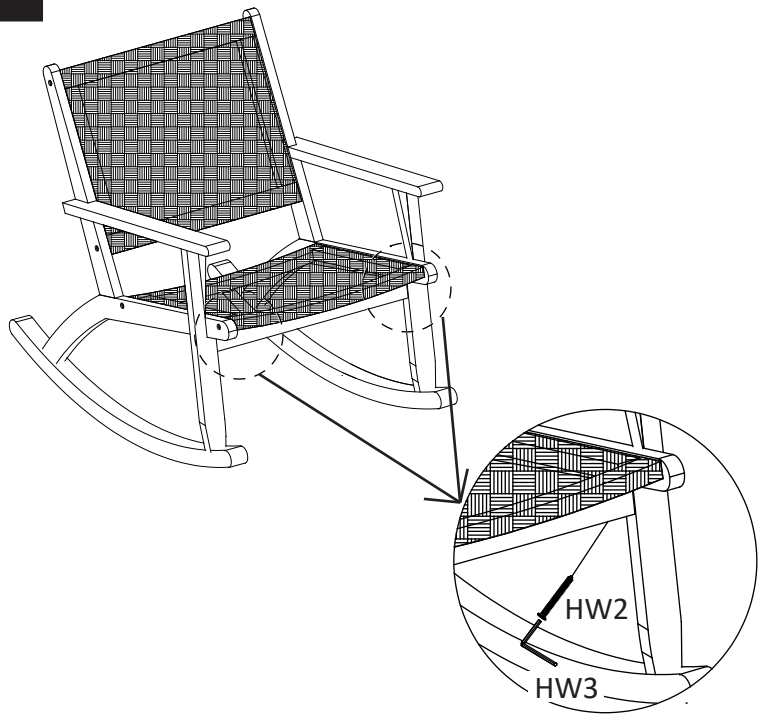

Step 3

Tighten screw (HW2) with allen key (HW3) to attach Crooss bar of leg (E) anh Left leg Panel (B) , Right leg Panel (A).

4

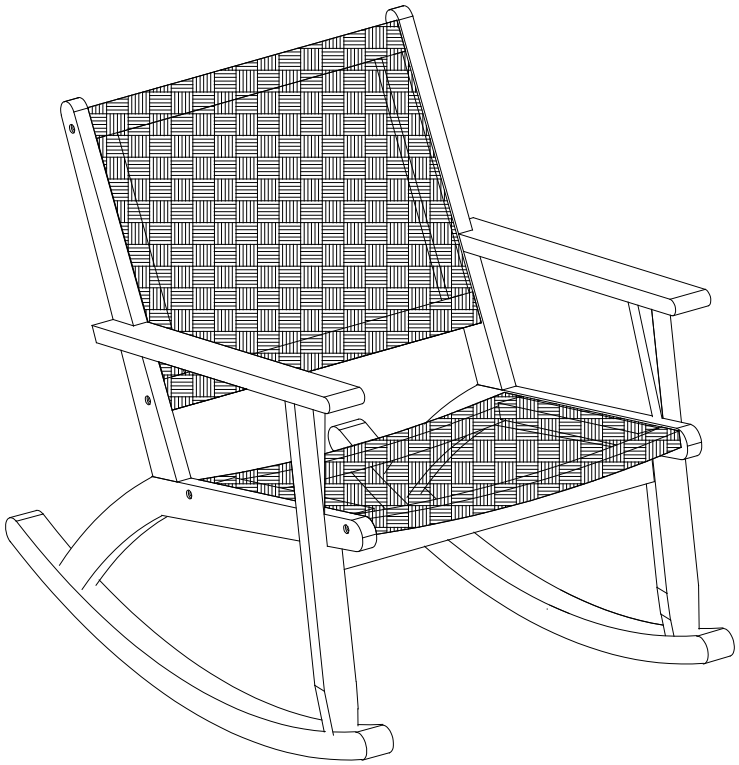

Step 4

Complete