Creative design

Multi-Scenario

Ceiling

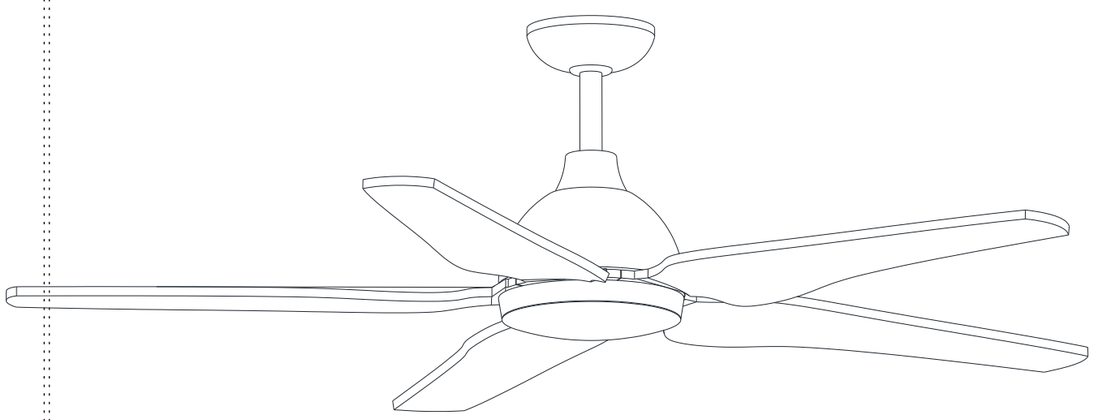

DEROCATE CEILING FAN

User Manual

Pre-Installation

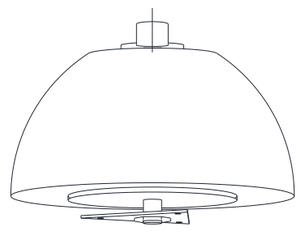

Fan-Motor assembly ×1PCS

Light kit fitter assemlly ×1PCS

LED ×1PCS

Blade X 5PCS

lamp shade ×1PCS

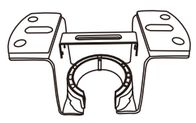

Slide - on mounting bracket (inside canopy) X 1PCS

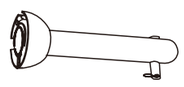

4.92 inch Ball/downrod assembly X 1PCS

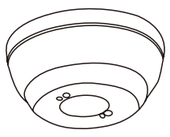

Canopy X 1PCS

Coupling cover X 1PCS

9.84 inch Ball/downrod assembly X 1PCS

Parts Kit

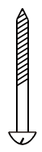

AA

Mounting screws ×4

BB

Expansion bolts ×2

CC

Plastic wire nut (not to scale) ×3

DD

Blade attachment screw ×11

EE

iron Washers ×11

NOTE	Hardware not shown to actual size.

Installation of the hanging bracket

CONCRETE CEILING

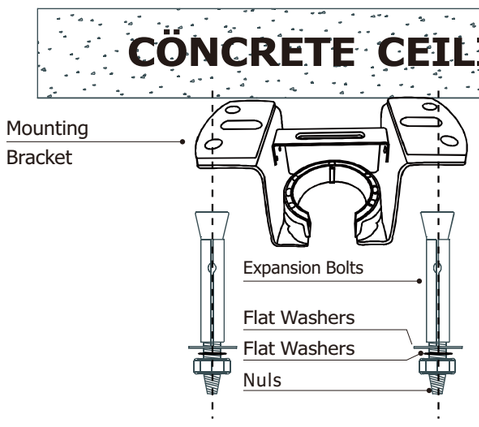

For concrete ceiling, use the percussion bit with diameter 8mm to drill holes according to the length of expansion screws. Then use the attached expansion screws to fix the hanging bracket onto the ceiling (selection is made according to actual requirements of the customers).

STEP 1 A-CONCRETE CEILING

SWITCH OFF THE ELECTRICAL MAINS AT THE CIRCUIT BREAKER FUSE BOX.

1)Use the Mounting Bracket as a guide, mark the spots where the 4 Expansion Bolts will be drilled.

2)Remove the Mounting Bracket , drill 2 holes and insert 2 Expansion Bolts into the concrete ceiling, install the mounting bracket and secure with Flat Washers , Spring Washers and Nuts .

⚠ **IMPORTANT : SCREWS & NUTS MUST BE TIGHTENED TILL SNUG**

WOODEN CEIING

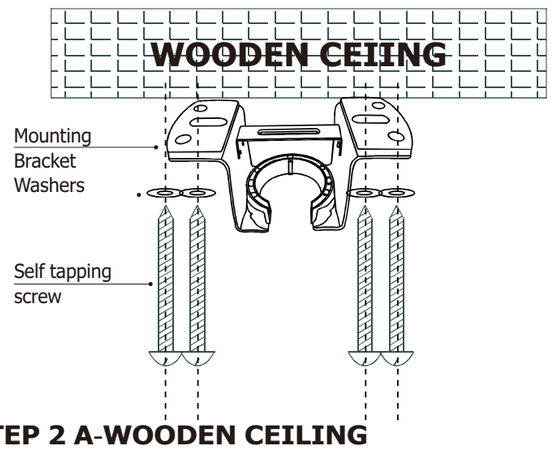

For wooden ceiling, use wood screw to drill on the wooden beam or the "junction box" to fix the hanging bracket(selection is made according to actual requirements of the customers)

STEP 2 A-WOODEN CEILING

SWITCH OFF THE ELECTRICAL MAINS AT THE CIRCUIT BREAKER FUSE BOX.

1) Use the Mounting Bracket as a guide, mark the spots where the 4 Self Tapping Screws will be drilled.

2) Remove the Mounting Bracket , drill 4 holes for 3MM diameter, install the mounting bracket onto wooden ceillng with the 4Self Tapping Screws &Washers

Install downrod assembly

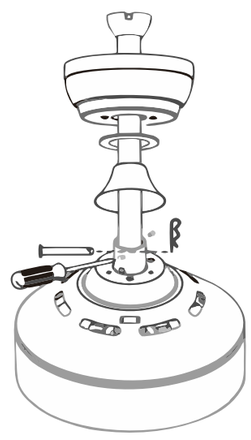

☐ Carefuly feed the molor wires up though the downrod

☐ Align the holes and replace hanger pin and locking pin.

☐ Tighten the two colar setscrews.

☐ Slip coupling cover,canopy coverand canopy onto the downrod.

Hang the fan

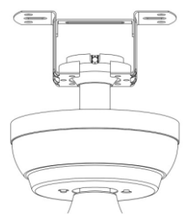

☐ Lift the fan motor assembly up to the mounting bracket and seat the hanger ball in the mounting bracket socket.Rotate the fan motor assembly until the check groove drops into the registration slot and seats firmly.The downrod should not rotate if the is done correctly

Install canopy

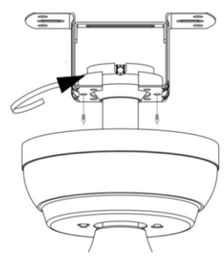

☐ Ensure the loosened screws is inserted into the key holes on the mounting bracket.

☐ Carefully raise the canopy up to the mounting bracket.Rotate the canopy clockwise.

☐ Secure the canopy by replacing the screws previously removed and tightening the screw previously loosened

☐ Place the canopy cover (if applicable)and rotate the canopy cover clockwise until it locks into position.

Install downrod assembly

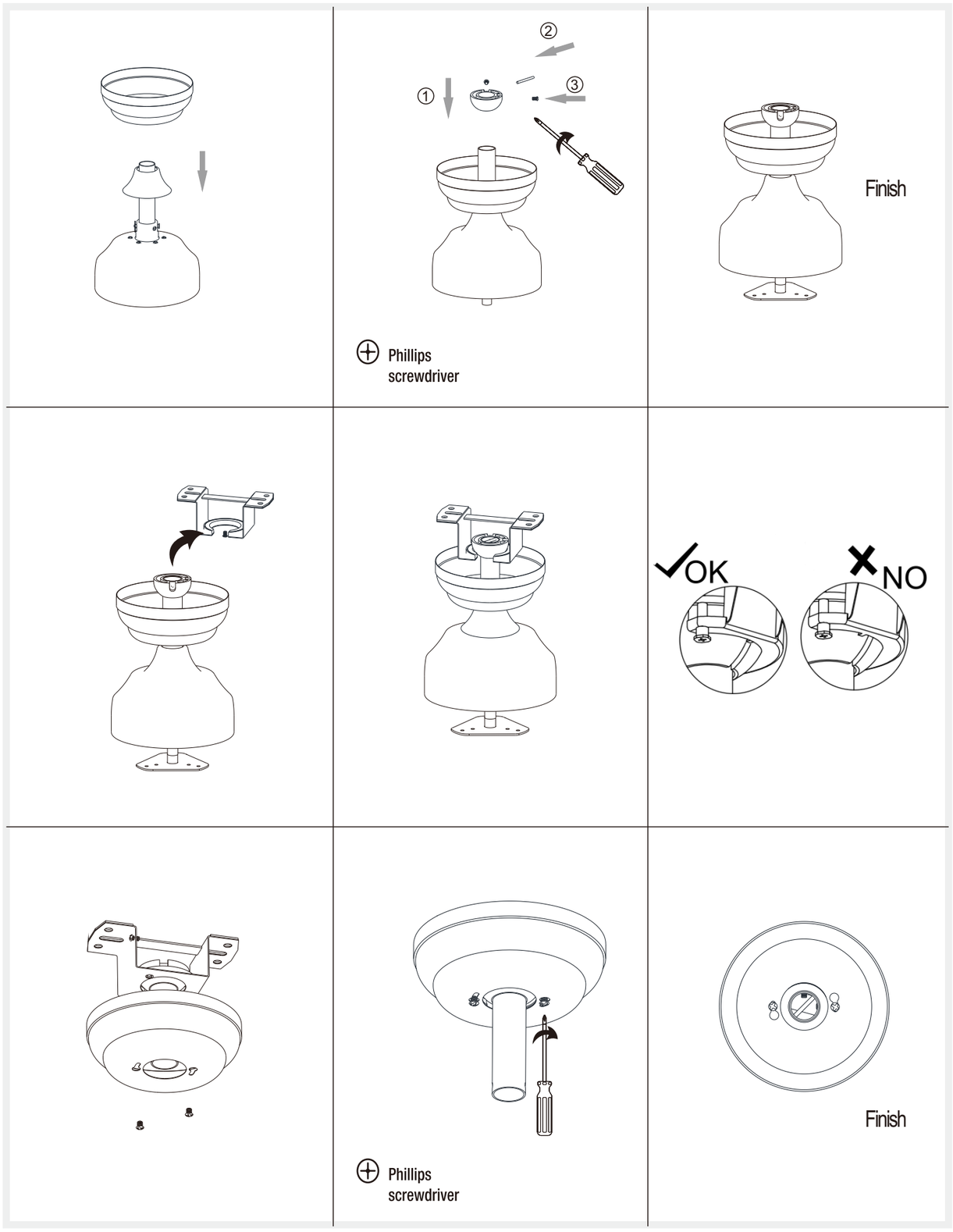

Fastening the blade arms to the motor

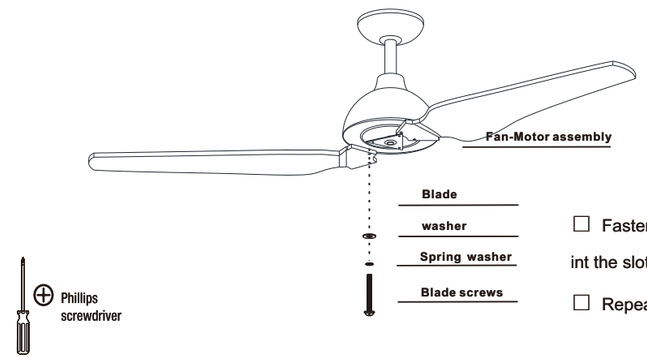

1.Remove the pre installed screws
2.Install the fan blade on the corresponding screw hole, and then install and fix it with the removed screws.

☐ Fasten the arm to the fan-motor assembly by inserting the aligment post int the slot on the bottom of the motor and tightening the pre-installed armscews.

☐ Repeat this step for the remaining blade assemblies.

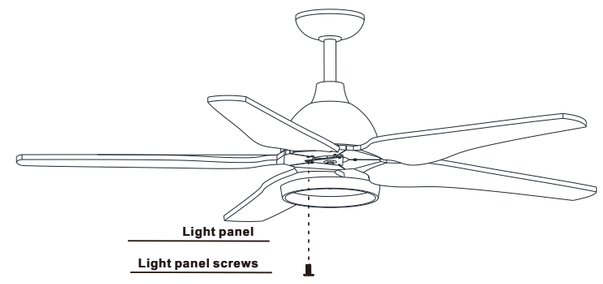

1.Remove the pre installed screws and install the lamp at the specified position

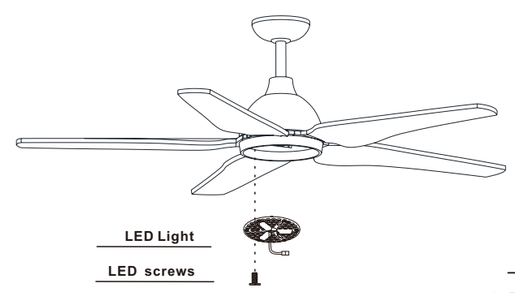

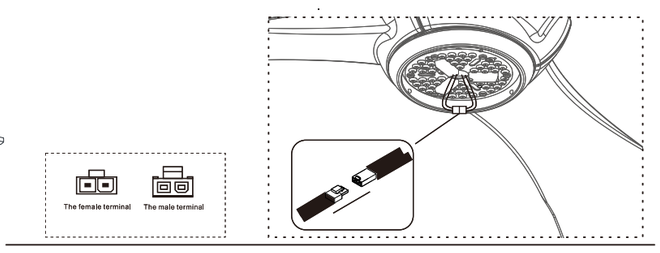

1: Put the LED light source into the disc (the LED light source has a magnet, which can be directly magnetized on the disc)
2: Pass the LED lead of the motor through the hole in the middle of the LED light source.
3: Then plug the male terminal of LED lead into the female terminal of LED light source (as shown in figure)

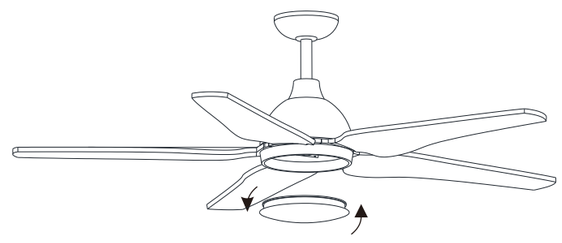

1.Screw the glass lampshade into the lamp in a counterclockwise direction. Make sure the glass lampshade is locked.

Making the electrical connections

WARNING:Each wire not supplied with this fan is designed to accept up to one12-gauge house wire and two wires from the fan.If you have large than 12-gauge house wiring or more than one house wire to connect to the fan wiring, consult an electrician for the proper size wire nuts to use.

IMPORTANT: Use the plastic wire connectors(BB) supplied with your fan.Secure the connectors with electrical tape and ensure there are no loose strands or connections.

WARNING:Remove the rubber motor stops on the bottom of fan before installing the blades or testing the motor.

WARNING :Each wire not supplied with this fan is designed to accept up to one12-gauge house wire and two wires from the fan. If you have larger than12-gauge house wiring or more than one house wire to connect to the fan wiring, consult an electrician for the proper size wire nuts to use.

WARNING: Remove the rubber motor stops on the bottom of the fan before installing the blades or testing the motor.

IMPORTANT: Use the plastic wire connectors(BB) supplied with your fan. Secure the connectors with electrical tape and ensure there are no loose strands or connections.

DC inverter fan light instruction manual

DC frequency conversion receiver wiring diagram

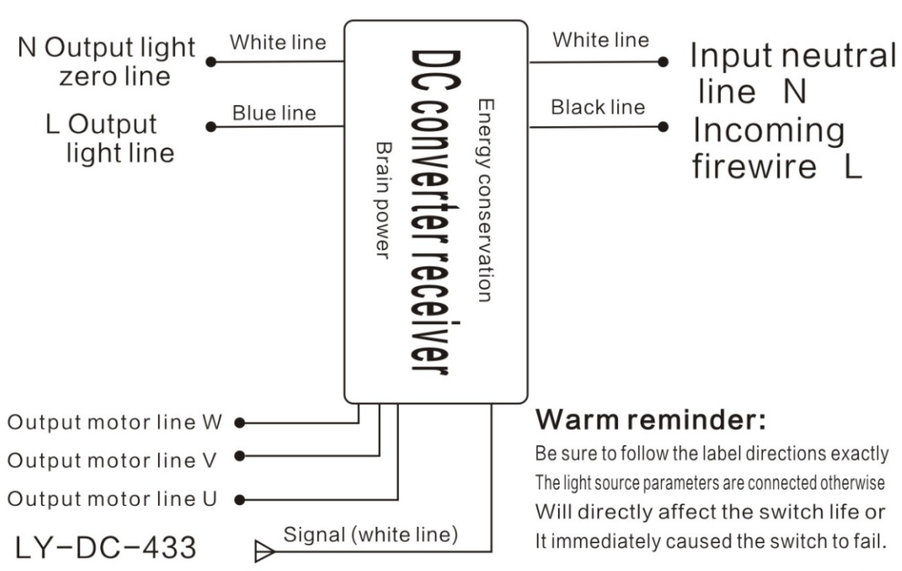

Warm reminder:

Be sure to follow the label directions exactly
The light source parameters are connected otherwise
Will directly affect the switch life or
It immediately caused the switch to fail.

Fan receiver parameter		Operating temperature	40° C(indoor)
Apparent dimension	115x50x25mm	Operating temperature	≥90%
Input voltage	85-265V	Output voltage	DC24 V
Input frequency	50/60Hz	Output power	Max. 200W light source

Attention!! No live operation during installation, wiring should be installed in accordance with national electrical standards

Use of remote control

1 LED indicator light
2 Master switch
3 Lights on/off
4Wind speed adjustment gear
5 Fan shutdown
6Fan timing
7Natural wind
8 The phoenix fan is turning
9 Fan reversal10 Sound offi

AAA-1.5V-LR03 (2 batteries)

Warm reminder:

1. When the transmitter cannot remote control the receiver,please check whether the switch battery contactis normal, whether the positive and negative terminals are placed correctly, and the power level Adequacy (if the light goes dark; Please replace the batteries, both batteries must be the same brand)
2. When the transmitter cannot remote control the receiver, please check whether there is a remote control product with the same frequency in the nearby range, and view itWhether the transmitter button is pressed, because the remote control product of the same frequency is transmitted at the same time will cause interference, affecting the reception errorMake the effect,eliminate the remote control function will return to normal.
3. When using this product, please do not put it in the place where children can play.
4. Code matching operation: Turn off the main power supply of the fan for 1 minute,then turn on the power switch, and press it simultaneously within 5 seconds after hearing a "drip" sound" 1 hours" and "4 hours", the receiver makes a "drop" sound, and the code is successful. I the code alignment fails, close itWait one minute and repeat the preceding steps.
5. When the remote control cannot be effectively controlled; Please check the battery and remove the battery if it is not used for a long time