SKU: CD-13

COMPACT DRYER

Instruction Manual

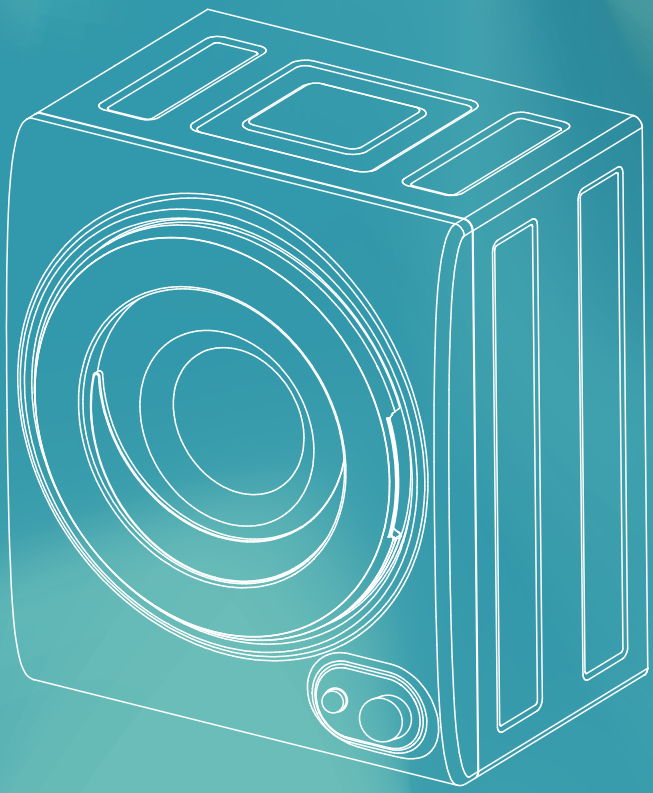

Congratulations on purchasing your new product. To ensure proper operation, please read this instruction manual carefully before using this product. Keep this manual in a safe place for future reference.

Email:
clousape@hotmail.com

Congratulations

Dear Customer:

Welcome to the our family. Thank you for purchasing one of our products.

Our goal is to provide you with superior service. If there is anything missing from or wrong with your order, or if you have any questions about using our product, PLEASE contact us.

Email: clousape@hotmail.com

Our team is available 24/7 to address your questions, comments, and concerns. Your satisfaction is our ultimate goal. We want to make everything right so you'll share your positive experience with other shoppers on Amazon.

If you experience any problems, please send an email to clousape@hotmail.com.

Our mission:
* To be the most trusted appliance brand.
* To create practical, compact appliances that better your life.

TABLE OF CONTENTS

Safety Precautions	2
Warning	3
Installation	4–5
Set up & Use	6–10
Maintenance	11
Troubleshooting	12
Warranty and Service	13

Safety Precautions

Important Safeguards

To reduce the risk of fire, electric shock, and/or injury to persons when using electrical appliances, basic safety precautions should always be followed, including:

For Your Safety

Read all the instructions carefully, even if you are familiar with the appliance.

- This appliance is not intended for use by persons (including children) with reduced physical, sensory or mental capabilities, or lack of experience and knowledge, unless they have been given supervision or instructions concerning the use of the appliance by a person responsible for their safety.
- Do not allow children to play on or in the appliance. Close supervision of children is necessary when the appliance is used near children.
- INDOOR USE ONLY - this appliance is not intended for outdoor use.
- Do not place open flame sources, such as candles, on the appliance.
- Do not place the appliance or cord near heat sources such as radiators, heaters, air ducts or direct sunlight.
- Do not block any of the ventilation openings. Ensure that vents are not covered by newspapers, tablecloths, curtains, etc.
- Do not run the cord under floor coverings. Instead, arrange the cord away from areas with high traffic where it will not become a trip hazard.
- Please disconnect the appliance, turn the appliance off, switch off the power outlet and remove the plug from the power outlet.
- Do not misuse the cord. Never carry the appliance by the cord or pull on it to disconnect it from the outlet. Instead, grasp the plug and gently pull to disconnect.
- Do not operate the appliance if it has a damaged cord or plug; if the appliance malfunctions; or if it has been dropped or damaged in any way. Consult the manufacturer.
- Do not attempt to repair, disassemble or modify this appliance. The warranty becomes void if not serviced or repaired by a qualified person.
- Do not reach into the appliance if the drum is moving.
- Before putting items that have been soiled by flammable liquids into the dryer, please wash them thoroughly with detergent in advance.
- Do not excessively bend, stretch, twist or bind the power cord or place heavy objects on it.
- This appliance is only to be serviced by a qualified person. There are no user-serviceable parts inside.
- Do not install in a tight-fitting cabinet.
- Do not overload the tumble dryer.
- Do not dry articles that have been previously cleaned in, washed in, soaked in, or spotted with gasoline, dry-cleaning solvents, or other flammable or explosive substances, as they give off vapors that could ignite or explode.
- Before the appliance is removed from service or discarded, remove the door to the drying compartment.
- Do not install or store this appliance where it will be exposed to direct sunlight.
- Do not tamper with the controls.
- Do not repair or replace any part of the appliance or attempt any servicing unless specifically recommended to do so in the user-maintenance instructions or in published user-repair instructions that you understand and have the skills to carry out.
- Do not use fabric softeners or products to eliminate static unless recommended by the manufacturer of the fabric softener or product.
- Do not use heat to dry articles containing foam rubber or similarly textured rubber-like materials.
- Keep area around the exhaust opening and adjacent surrounding areas free from the accumulation of lint, dust, and dirt.
- The interior of the appliance and exhaust duct should be cleaned periodically by a qualified service person.
- Do not place items exposed to cooking oils in your dryer. Items contaminated with cooking oils may contribute to a chemical reaction that could be a fire hazard.
- Ensure that foreign objects do not find their way into the tub of the tumble dryer.
- Clean the lint screen before or after each load.

Warning

Oil-affected items can ignite spontaneously, especially when exposed to heat sources such as in a tumble dryer. The items become warm, causing an oxidation reaction in the oil. This oxidation creates heat, and if the heat cannot escape, the items can become hot enough to catch fire. Piling, stacking or storing oil-affected items can prevent heat from escaping and become a fire hazard.

- If it is unavoidable that fabrics containing vegetable or cooking oil, or items that have been contaminated by haircare products are placed in a tumble dryer, they should first be washed in hot water with extra detergent. This will reduce, but not eliminate, the hazard.
- Do not dry unwashed items in the tumble dryer.
- Items that have been soiled with substances such as cooking oil, acetone, alcohol, petrol, kerosene, spot removers, turpentine, waxes and wax removers should be washed in hot water with an extra amount of detergent before being dried in the tumble dryer.
- Fabric softeners, or similar products, should be used as specified by the fabric softener instructions.
- The final part of a tumble dryer cycle occurs without heat (cool down cycle) to ensure that the items are left at a temperature that won't damage the items.
- WARNING: Never stop a tumble dryer in the process of the drying cycle unless all the items are quickly removed and spread out so that the heat is dissipated.

Caution, danger

This dryer cannot be used upside down

WARNING

Fire Hazard

Installation of the clothes dryer must be performed by a qualified installer.

Install clothes dryer according to the manufacturer's instructions and local codes.

Do not install a clothes dryer with flexible plastic venting materials. If flexible metal (foil type) duct is installed, it must be of a specific type identified by the appliance manufacturer as suitable for use with clothes dryers. Flexible venting materials are known to collapse, be easily crushed, and trap lint. These conditions will obstruct the clothes dryer's airflow and increase the risk of fire.

To reduce the risk of severe injury or death, follow all the installation instructions.

Connect to Individual Branch Circuit.

This appliance must be grounded. In the event of malfunction or breakdown, grounding will reduce the risk of electric shock by providing a path of least resistance for the electric current. This appliance is equipped with a cord having an equipment-grounding conductor and grounded in accordance with all local codes and ordinances.

WARNING

Improper connection of the equipment-grounding conductor may cause electric shock. Check with a qualified electrician or service representative if you are not sure as to whether the appliance is properly grounded. Do not modify the plug provided with the appliance: if it does not fit the outlet, have a proper outlet installed by a qualified electrician.

Appliance must be placed on a steady, flat surface. Do not place the dryer on carpet as this will block the intake. There should be at least 10cm between the dryer and the walls.

Installation Instructions

This dryer cannot be used upside down.
Where to place your dryer:

Place the dryer in a dry well-ventilated area.

It should be positioned away from heat sources and direct sunlight.

If the dryer is not wall-mounted, it must be placed on a firm, flat surface. Do not place the dryer on a carpet as this will block the intake. There should be at least 15cm between the dryer and the walls.

The dryer comes with fixed legs that need to be assembled to ensure stability.

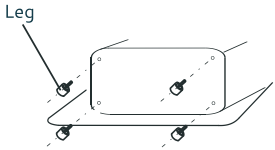

If the dryer is rack-mounted, a secure bracket is required to ensure stability and to prevent vibration. At least 15cm between the dryer and walls is required (Bracket is not included).

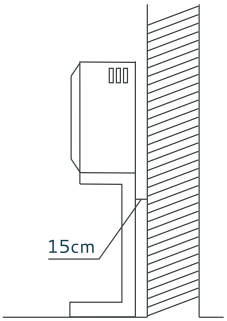

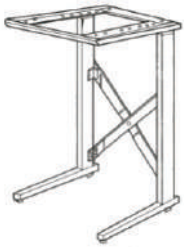

Wall Mounting Instructions

1. Determine the dryer position on your wall and mark required bracket position. The dryer should not be directly placed on top of a washing machine.

* A minimum of 50mm is needed between the top of the dryer and the ceiling for ease of installation.

* If mounting above a washing machine, allow sufficient room to open the lid of the washer.

Tools Required		
Tools & parts required for plaster/ wooden wall	Drill & 3mm Bit	1
	Philips Head screwdriver	1
	Wood Screws, 12x 50mm Timber screws	4
	Helper to lift dryer onto wall	1

Wall Mounting Kit Includes			
Description	Hanging brackets		2
	Plastic spacers		2
	Exhaust connector		1
	12mm Long Screws		4
	25mm Long Screws		4

2. Fix the wall hanging brackets (2 supplied) to the wall securely (e.g., into the stud). Fit a timber slat between the studs to mount the brackets onto the stud position is too wide.

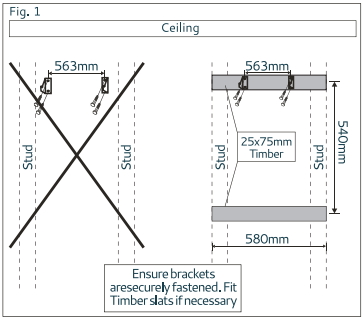

Installation

3. To install the hanging hook to timber, start at Fig 2.
4. Align hanging hooks and fasten screws tightly.
5. Please adjust the exhaust connector direction, then, match the exhaust connector onto the connector. Please refer to Fig 3.
6. Turn the exhaust connector clockwise, until it inserts into the connector's groove.
7. Use the 4 X 12mm screws (provided) to fix the 2 spacers as per Fig 4.
8. With assistance, mount the dryer on wall bracket. See Fig.5.

Fig. 2

Fig. 3

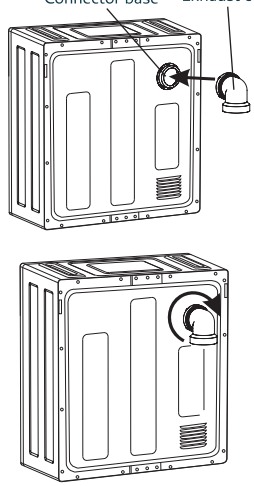

Fig. 5

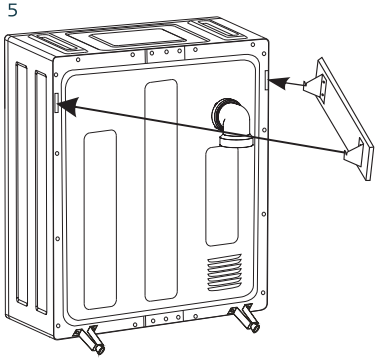

Fig. 4

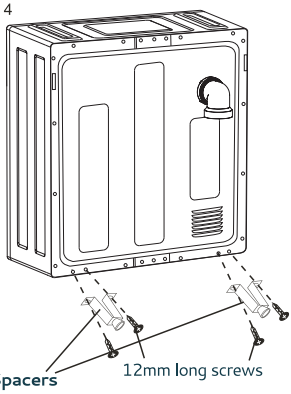

The appliance shall not be exhausted into a chimney, a wall, a ceiling, an attic, a crawl space, or a concealed space of a building.

Only rigid or flexible metal duct shall be used for exhausting.

In Canada, only foil-type flexible ducts, if any, specifically identified for use with the appliance by the manufacturer, should be used. In the United States, only foil-type flexible ducts, if any, specifically identified for use with the appliance by the manufacturer and that comply with the outline for Clothes Dryer Transition Duct, Subject 2158A, shall be used.

The total length of the flexible metal duct shall not exceed 2.4 m.

The duct shall not assembled with screws or other fastening means that extend into the duct and catch lint.

Names of Components

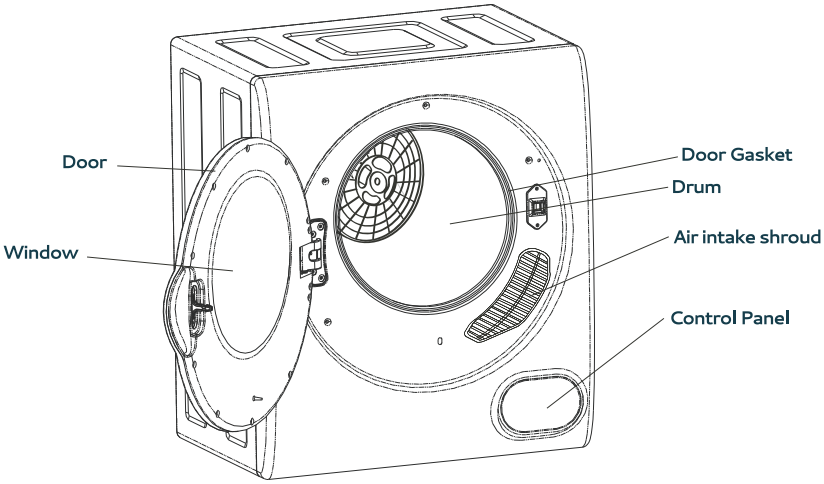

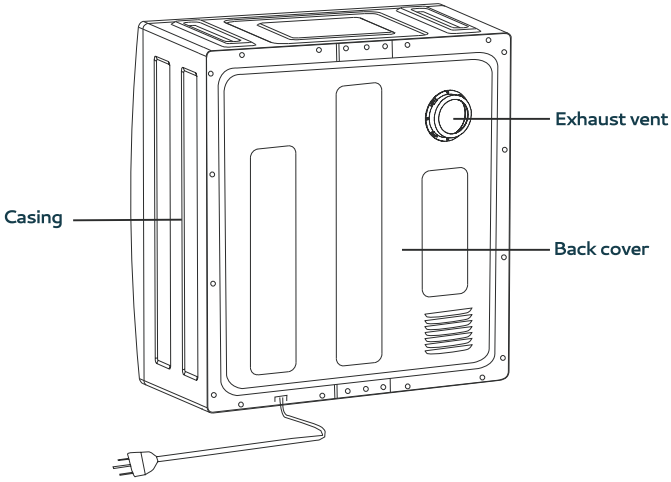

Operating your dryer

Electrical Requirements

The unit is required to be plugged into a three pin socket that is reliably grounded.

Plug the power cord into the socket.

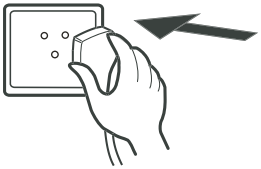

Loading the dryer

It is recommended that items are placed into the dryer one at a time. This ensures they are not tangled which results in uneven drying. When closing the dryer door prior to starting the unit ensures that items are not jammed in the door.

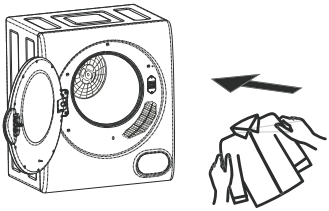

Tips before drying

Prior to loading the dryer check that the items do not have the following symbols anywhere on them. If they do, do not tumble dry these items.

Dry flat Dry

Dry in the shade

Do not tumble dry

Hang to dry

Drip dry

- Check if the items to be dried do not have combustible materials or foreign objects within them, i.e.: lighters, hair pins, coins.

- Turn items with zippers inside out and fasten the buckles.

- Dryer heat may permanently set stains, ensure you check prior to drying that stains are removed.
- Separate dark and light colored items as you would do when washing.
- For best results load the dryer with similar fabrics. Place small delicate items in a mesh bag and do not overload the dryer.
- The maximum mass is 2.5 kilogram's of dry textile material for the dryer and do not overload. The compact dryer is intended only for drying textile material washed in water.

Drying time reference table

Drying Capacity	Approximate Drying Times
3 Lbs. (1.4 kgs.)	30 Minutes
6 Lbs. (2.7 kgs.)	60 Minutes
9 Lbs. (4.1 kgs.)	120 Minutes
13 Lbs. (5.9 kgs.)	200 Minutes

Drying times can be affected by many factors, such as material, bulkiness, how full the dryer is etc. The above list is a guide only.

Operation Precautions

Delicate items should be placed into a nylon mesh bag prior to drying. It is not recommended to dry under wire bras in this unit.

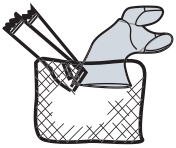

Ensure that all pockets of items are emptied and that buttons, buckles and zips are fastened. This will also help reduce impact noise when the items hit against the turning drum.

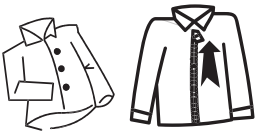

Do not add items into the dryer whilst it is in operation.

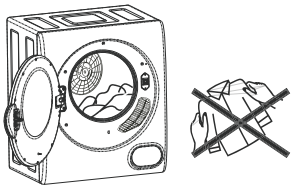

If drying large items such as blankets, it is recommended that you open the dryer door from time to time, shake the items, place them back in the dryer and close the door. This will ensure even drying.

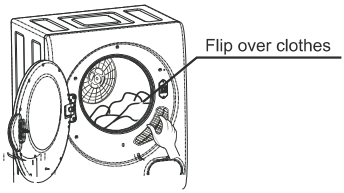

To get the most out of the anti-wrinkle function, do not overload the dryer and remove the dried items from the dryer immediately and hang on coat hangers. Iron the items if desired.

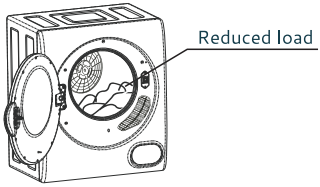

To minimize the risk of fire in a tumble dryer, the following should be observed:

- Items that have been spattered or soaked with vegetable or cooking oil constitute a fire hazard and should not be placed in a tumble dryer.

Oil-affected items can ignite spontaneously, especially when exposed to heat sources such as in a tumble dryer. The items become warm, causing an oxidation reaction in the oil. Oxidation creates heat. If the heat cannot escape, the items can become hot enough to catch fire. Piling, stacking or storing oil-affected items can prevent heat from escaping and so create a fire hazard.

The 'cool down' cycle of tumble dryers should be used to reduce the temperature of the items.

They should not be removed from the tumble dryer or piled or slacked while hot.

Items that have been previously cleaned in, washed in, soaked in or spotted with petrol/gasoline, dry-cleaning solvents or other flammable or explosive substances should not be placed in a tumble dryer.

Highly flammable substances commonly used in domestic environments include acetone, denatured alcohol, petrol/gasoline, kerosene, spot removers (some brands), turpentine, waxes and wax removers.

- Items containing foam rubber (also known as latex foam) or similarly textured rubber-like materials should not be dried in a tumble dryer on a heat setting.

Foam rubber materials can, when heated, produce fire by spontaneous combustion.

- Fabric softeners or similar products should not be used in a tumble dryer to eliminate the effects of static electricity unless this practice is specifically recommended by the manufacturer of the fabric softener or product.
- Undergarments that contain metal reinforcements should not be placed in a tumble dryer.

Metal reinforcements may come loose during drying and cause damage to the tumble dryer. If available, a drying rack could be used for such items.

- Plastic articles such as shower caps or waterproof baby napkin covers should not be placed in a tumble dryer.
- Rubber-backed articles, clothes fitted with foam rubber pads, pillows, galoshes and rubber-coated tennis shoes should not be placed in a tumble dryer.

Control Panel Functions

Power Button

When the power cord is connected to the socket, the power button is slightly lit, and you can see the location of the power button. After touching the power button, other buttons and descriptions on the control panel appear, and the dryer enters standby mode.

Program Button

This button is used to select a different drying programs, as described below.

a) Strong drying: Select this program, the light bar is red, the remaining time defaults to "150". In the process of running the program, the heater, when on full power heating, will run the set time after the shutdown. Generally used to dry larger sized clothing.

b) Intelligent drying: Select this program, the light bar is white, the remaining

time is displayed as "200". (that is intelligent). In this process of running the program, is running, the heater full power heating, clothes drying automatically shut down.

c) ECO drying: Select this program, the light bar is blue, the remaining time is displayed as "ECO". The Dryer operates under an energy-saving mode. The operating time is determined by the humidity sensor, by athe maximum duration of 210 minutes.

d) Normal drying: When this program is selected, the light bar is greengreen, and the remaining time is displayed as ,"90". In this mode of operation, the heater half-power heating, run the set time after the shutdown. This mode has two functions of runningiraning and drying, ironing function set time is generally not more than 90 minutes, after the shutdown it will still contain some moisture for, easy ironing. The; drying function set time is generally not less than 120 minutes., Generally used for small sized clothing or a small amounts of clothing.

Note: This button is invalid during the operation of the dryer. To change the pragram, touch the "Start / Pause" button to pause the dryer before touching this button to change ttiethe mode.

Time Button

This button is used to set the drying time. With, each touch, the time increased by 20 minutes, up to not more than 200 minutes. When the remaining time is greater than 180 minutes, touch this button, and the remaining time will jump to 20 minutes. In the ""Intelligent drying"" aneand ""ECO drying"" program, this button is invalid. During the operation of the dryer, this button is also invalid, if you need to change the time, you must first touch the ""Start/ Pause"" button to pause the dryer, and then touch the key to change the time.

Start/Pause Button

Press this button to start or pause the dryer operation.

When the program and time are set, touch the button to start the dryer. To, lb change the time or procedure while the dryer is running, touch the key to put the dryer in a paused state.

Maintenance

Cleaning the Lint Filter

Please unplug the power cord prior to any cleaning. The lint filter must be in place whenever drying. It must be cleaned before each use.

1. Removing the filters

Remove by pulling outwards with your fingers, inserted into the four holes around the exhaust vent shroud. The filter is in 3 parts: Exhaust vent shroud, lint filter and exhaust filter (as shown in Figure 1)

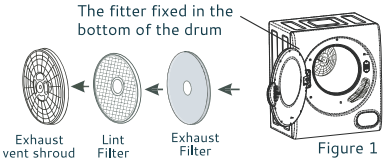

Figure 1

2. Cleaning the filter

Separate "exhaust vent shroud", "lint filter" and "exhaust filter". Clean the lint on the lint filter and exhaust filter with a soft brush or vacuum cleaner. Do not damage the filters (See figure 2).

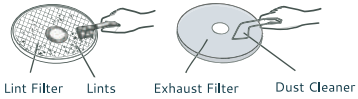

3. Re-installing the filter

After cleaning, assemble in the sequence of "exhaust filter – lint filter – exhaust vent shroud", align the recesses in the center with the projection in the center of the drum. Make sure that it is firmly inserted (see Figure 3).

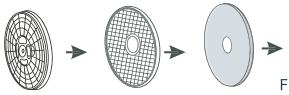
Figure 3

Note: The filter fixed in the bottom of the drum should also be cleaned with a soft brush.

Cleaning of the Air Intake Filter

The filter should be cleaned once a month.

Remove by pulling outwards holding the upper and lower ends of the air intake shroud. Remove the filter inside the shroud and clean it with a soft brush. Reassemble and install as before.

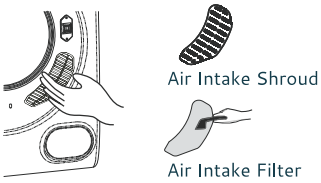

Slightly push upwards with your thumb until the latch hook disconnects, then remove.

Cleaning the interior & exterior of the dryer

Do not wash with water.

Do not use thinners, gasoline or alcohol.

Do not use any type of spray cleaner when cleaning the interior. If dryer drum becomes stained, clean the drum with a damp cloth. Remove any residue before drying the next load. Clean the cabinet with mild soap and water. Do not use harsh or abrasive cleaners, as this could damage the dryer.

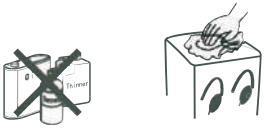

WARNING:
Regularly clean the lint trap

CAUTION! HOT SURFACE

- Do not touch the intake during the drying cycle due to high temperatures

PLEASE READ THE INSTRUCTIONS

Troubleshooting

Review the following pages before calling for service.

Problem	Possible Cause	What to do
Timer knob does not turn	• Is the power cord inserted firmly?	• Insert the power cord firmly.
Drum does not turn	• Is the door closed? • Is the power cord inserted? • Does the receptacle have power?	• Close the door. • Insert the power cord firmly. • Check the power cord receptacle.
Hot air is not blowing out	• Is the timer incorrectly set on cold air?	• Set the timer to hot air.
The laundry is not thoroughly dried	• Are the front and back filters clogged? • Is there too many items in the dryer? • Have items been added whilst the dryer was in operation? • Has the laundry become twisted whilst drying? • Has the dryer been placed in a small and badly ventilated area? • Have you set the dryer to Antiwrinkle?	• Clean the filter. • Reduce the amount of items in the dryer. • Re-dry the items again Untangle the items and re-dry. • Place the dryer in a well-vented area. • Try using 'Warm' or 'Hot' setting instead.
Dryer does not start	• Is there a power failure? • Is the power cord inserted firmly? Is the door closed? • Is the timer in the OFF position?	• Try again when there is power. • Insert the power cord firmly. • Close the door. • Set the dry time.

Dryer Technical Specifications

SKU	CD-13
Drying Capacity	13.2 LBS
Voltage	120V/60HZ
Rated Input	1500W

NOTE: Consistent with our continuing product development policy, improvements may have been made which render the contents of this package slightly different to that shown.

Warranty and Service

We offers a limited 1-year warranty ("warranty period") on all of our products purchased new and unused from us with an original proof of purchase and where a defect has arisen, wholly or substantially, as a result of faulty manufacture, parts, or workmanship during the warranty period. The warranty does not apply where damage is caused by other factors, including without limitation:

(a) normal wear and tear;

(b) abuse, mishandling, accident, or failure to follow operating instructions;

(c) exposure to liquid or infiltration of foreign particles;

(d) servicing or modifications of the product other than by our company;

Our warranty covers all costs related to restoring the proven defective product through repair or replacement of any defective part and necessary labor so that it conforms to its original specifications. A replacement product may be provided instead of repairing a defective product. Our sole obligation under this warranty is limited to such repair or replacement. A receipt indicating the purchase date is required for any claim, so please keep all receipts in a safe place. Although greatly appreciated, the product registration is not required to activate any warranty, and product registration does not eliminate the need for the original proof of purchase. The warranty will be voided if repairs are performed by a non-authorized third party and/or if spare parts other than those provided by the Company are used. You may also arrange for service after the warranty expires, at an additional cost.These are our general terms for warranty service, but we always urge our customers to reach out to us with any issue, regardless of warranty terms. If you have an issue with our products， please contact us (clousape@hotmail.com), and we will do our best to resolve it for you.