USE AND CARE MANUAL

1 LIGHT PLUG-IN WALL SCONCE
Model number: 21519

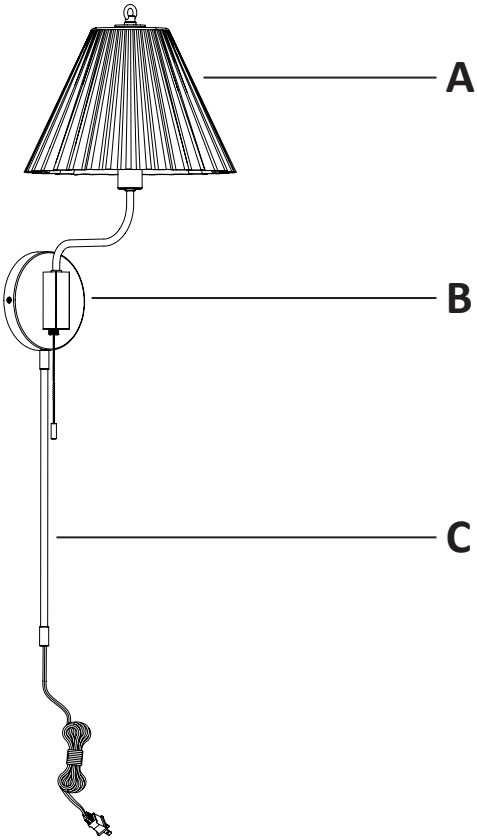

Hardware (Parts are not to scale)

H1 Mounting bracket (Pre-assembled to fixture body) 1 pc	**H2** Support screw (short) (Pre-assembled to mounting bracket) 2 pcs	**H3** Outlet box screw (long) 2 pcs	**H4** Green ground screw (Pre-assembled to mounting bracket) 1 pc
H5 Wire connector 3 pcs	**H6** Wood screw 2 pcs	**H7** Plastic anchor 2 pcs	**H8** Glass shade bracket 1 pc
H9 Socket ring 1 pc	**H10** Plastic washer 1 pc	**H11** Washer 1 pc	**H12** Loop 1 pc

THIS MANUAL CONTAINS IMPORTANT SAFETY INFORMATION. PLEASE READ AND KEEP FOR FUTURE REFERENCE.

IMPORTANT SAFETY INFORMATION

- Please read and understand this entire manual before attempting to assemble, operate or install the product.
- Turn off electricity at main fuse box (or circuit breaker box) before beginning installation by removing fuse (or switching off circuit breaker).
- Be careful not to damage or cut the wire insulation (covering) during fixture installation. Do not permit wires to contact any surface having a sharp edge. To do so may damage or cut the wire insulation, which could cause serious injury or death from electric shock.
- All electrical connections must be in agreement with local codes, ordinances or the national electric code (NEC). Contact your municipal building department to learn about your local codes, permits and/or inspections. If you do not have electrical wiring experience, refer to a do-it-yourself wiring handbook or have your fixture installed by a qualified licensed electrician.
- Risk of fire – most dwellings built before 1985 have supply wire rated for 140°F/60ºC. Consult a qualified electrician before installation.
- Do not exceed the recommended wattage. Refer to the re-lamping label on the light socket for maximum wattage.
- Do not replace a bulb when electrical outlet switch is turned to the “ON” position.
- Do not immerse your lamp in water; doing so will damage the wire.
- Keep materials that burn easily away from lighted bulbs.
- This portable lamp has a polarized plug (one blade is wider than the other) as a safety feature to reduce the risk of electric shock. This plug will fit into a polarized outlet only one way. If the plug does not fit fully into the outlet, reverse the plug. If it still does not fit, contact a qualified electrician. Never use with an extension cord unless plug can be fully inserted. Do not alter the plug.

PREPARATION

- Before beginning assembly, installation or operation of product, make sure all parts are present. Compare parts with package contents list and diagram on previous page. If any part is missing or damaged, do not attempt to assemble, install or operate the product. Contact customer service for replacement parts.
- Tools required for assembly (not included): flathead screwdriver, phillips screwdriver, pliers, electrical tape, wire cutters, safety glasses, ladder, wire stripper.

INSTALLATION

Hardwire installation

1 Preparing the mounting bracket

- Unscrew the two support screws (short) (H2) from the mounting bracket (H2). Remove the mounting bracket (H1) from the fixture body (B), and keep the two support screws (short) (H2) for later use.

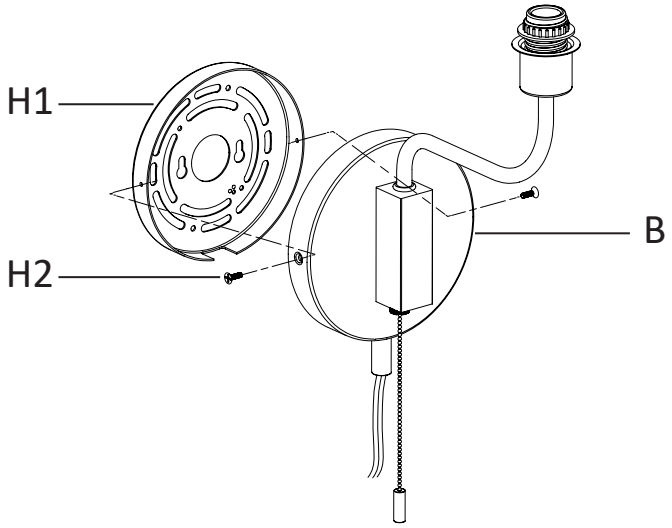

2 Installing the mounting bracket

- Fasten the mounting bracket (H1) onto the outlet box (not provided) using two outlet box screws (long) (H3).

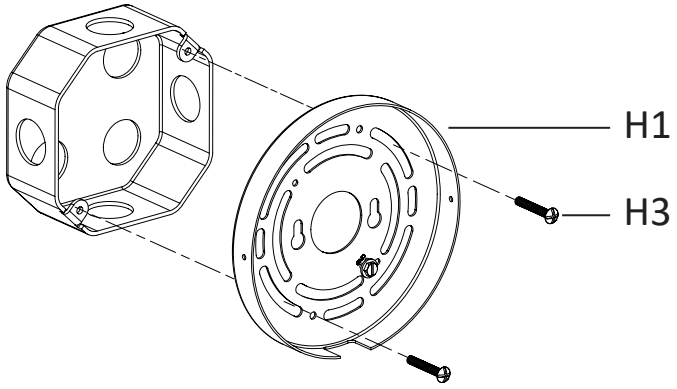

Hardwire installation

3 Removing the power cord

- Remove the electrical tape on the wire connectors (H5) then turn the wire connector (H5) counterclockwise and remove them from the black wire and white wire.
- Unwire the black wire and white wire from the cord, then remove the power cord.

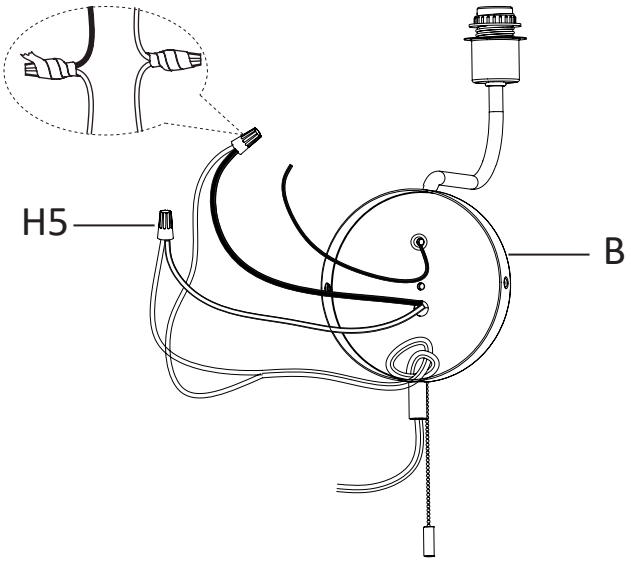

4 Making the electrical connections

- Connect the black wire from the fixture to the black wire from the outlet box, then connect the white wire from the fixture to the white wire from the outlet box.
- Connect the bare copper ground wire to the ground wire from the outlet box. The bare copper ground wire from the fixture body (B) must loop one turn under the head of the green ground screw (H4) on the mounting bracket (H1) before it is connected to the ground conductor of the supply circuit.
- Cover the wires with wire connectors (H5). Tape the wire connectors (H5) and wires together, and carefully position all wires inside the outlet box.

NOTE: Do not let go of the fixture body (B) before the fixture body (B) installed on the mounting bracket (H1).

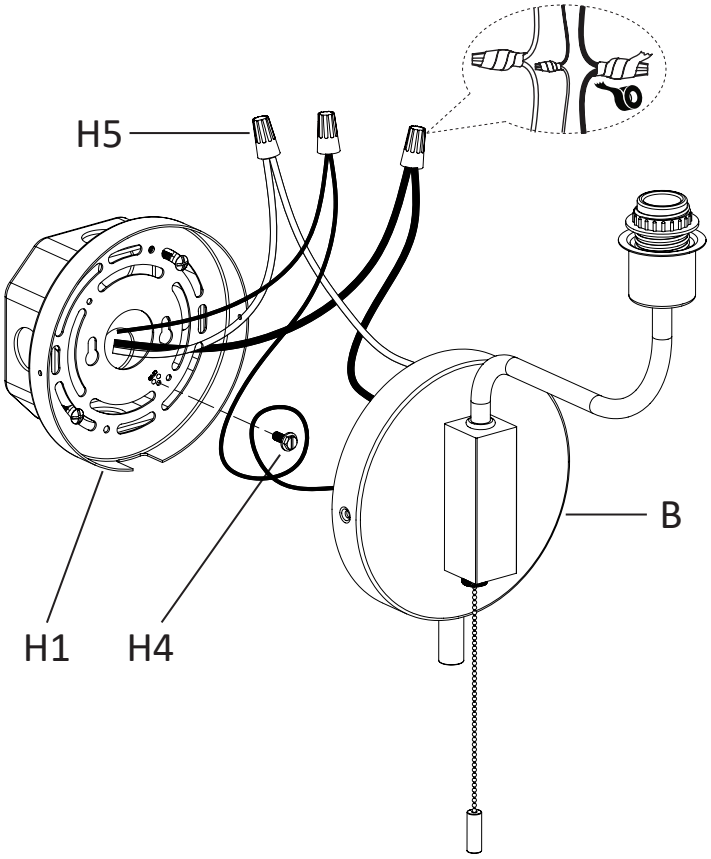

Hardwire installation

5 Installing the fixture body to the outlet box

- Place the fixture body (B) over the outlet box, align the two holes of the mounting bracket (H1) and the canopy of the fixture body (B), then tighten the support screws (short) (H2).

NOTE: Do not let go of the fixture body (B) before the fixture body (B) installed on the mounting plate (H1).

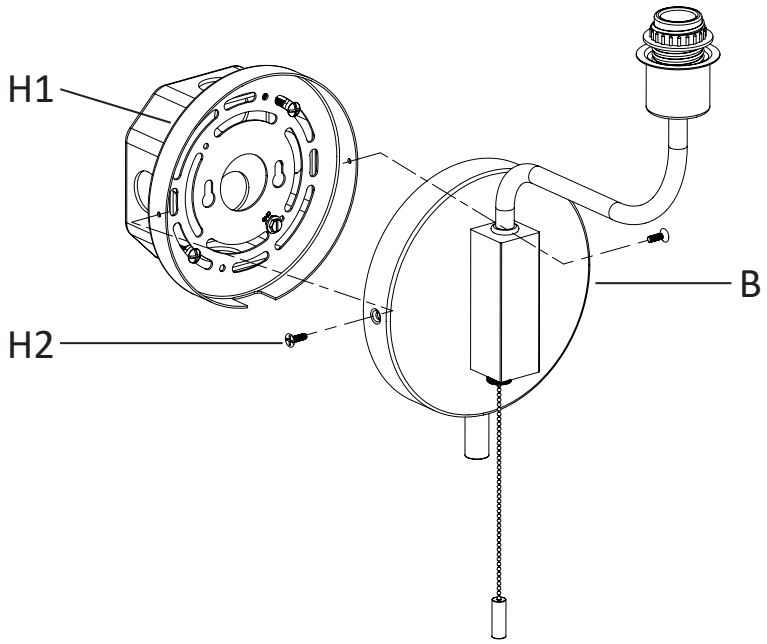

6 Installing the glass shade and light bulb

- Unscrew the socket ring (H9) from the socket of the fixture body (B).
- Place the glass shade bracket (H8) over the socket and secure it with the socket ring (H9).
- Install the light bulb (not provided) into the socket. Use one **60 W candelabra base (E12) type "B"** bulb (recommended).
- Place the glass shade (A) over the glass shade bracket (H8) and secure it with the plastic washer (H10), the washer (H11) and the loop (H12) as shown in the diagram.
- Tighten the decoration tube (C) to the fixture body (B) as shown in the diagram.
- Pull the switch chain of the fixture body (B) and enjoy.

NOTE: You can also use one **9W candelabra base (E12) self-ballasted LED** bulb. Do not exceed the recommended wattage.

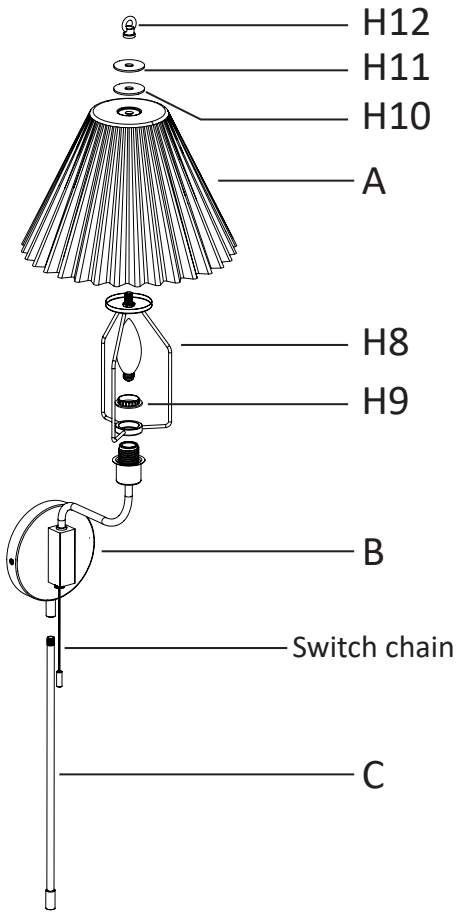

Plug-in Installation

1 Preparing for installation

- Unscrew the two support screws (short) (H2) from the mounting bracket (H2). Remove the mounting bracket (H1) from the fixture body (B), and keep the two support screws (short) (H2) for later use.
- Determine the desired location of the fixture making sure you have access to an electrical outlet and there are no electrical lines or plumbing where you intend to attach the mounting hardware.
- Attach the flat side of the mounting bracket (H1) to the wall, then make the location on the two key holes with a pencil (not provided).
- Drill a small hole on each mark and push the plastic anchors (H7) into the wall using a hammer.
- Set two wood screws (H6) into the plastic anchors (H7) using a screwdriver, leaving enough exposed to set into the keyhole slots on the mounting bracket (H1).

NOTE: If your wall is wood, do not drill holes. Screw the two wood screws (H6) to the desired location.

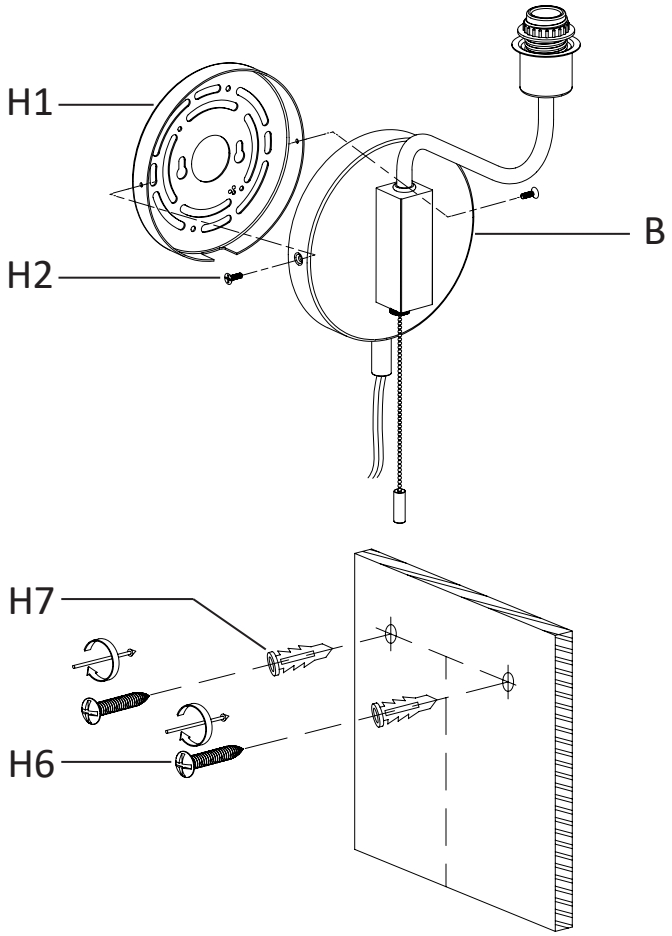

2 Installing the glass shade and light bulb

- Reassemble back the mounting bracket (H1) to the fixture body (B).
- Unscrew the socket ring (H9) from the socket of the fixture body (B).
- Place the glass shade bracket (H8) over the socket and secure it with the socket ring (H9).
- Install the light bulb (not provided) into the socket. Use one **60 W candelabra base (E12) type "B"** bulb (recommended).
- Place the glass shade (A) over the glass shade bracket (H8) and secure it with the plastic washer (H10), the washer (H11) and the loop (H12) as shown in the diagram.
- Tighten the decoration tube (C) to the fixture body (B) as shown in the diagram.

NOTE: You can also use one **9W candelabra base (E12) self-ballasted LED** bulb. Do not exceed the recommended wattage.

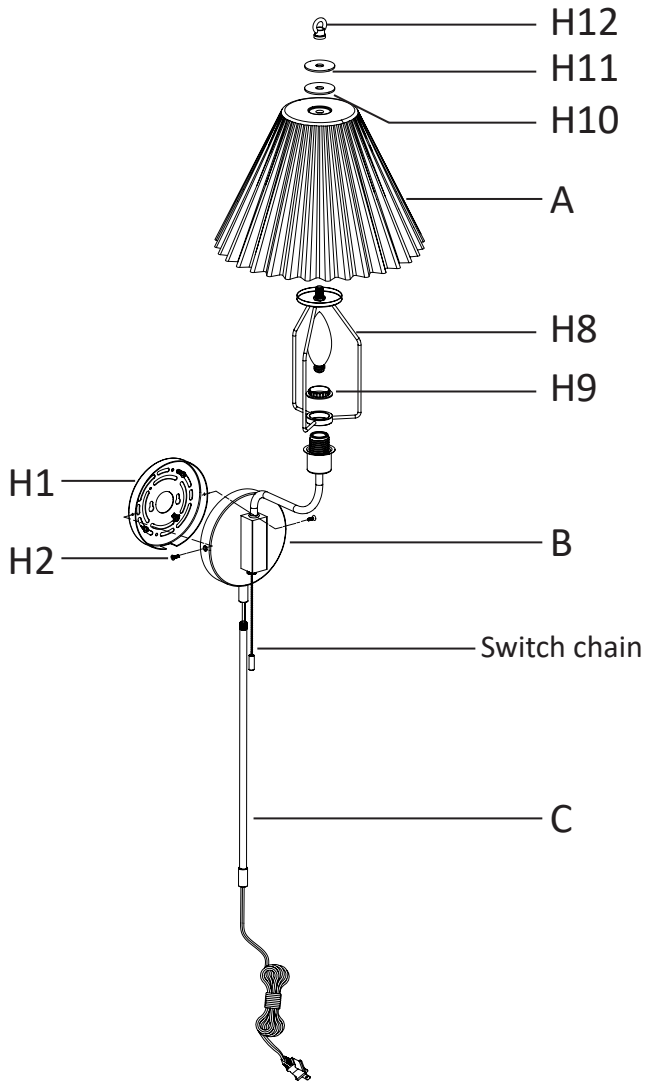

Plug-in Installation

3 Attach the fixture body to wall

- Align the two key holes on the mounting bracket (H1) to the wood screws (H6) on wall and then gently push the fixture body (B) toward the wall and slide down until secure.
- Plug into the wall outlet, pull the switch chain of the fixture body (B) and enjoy.

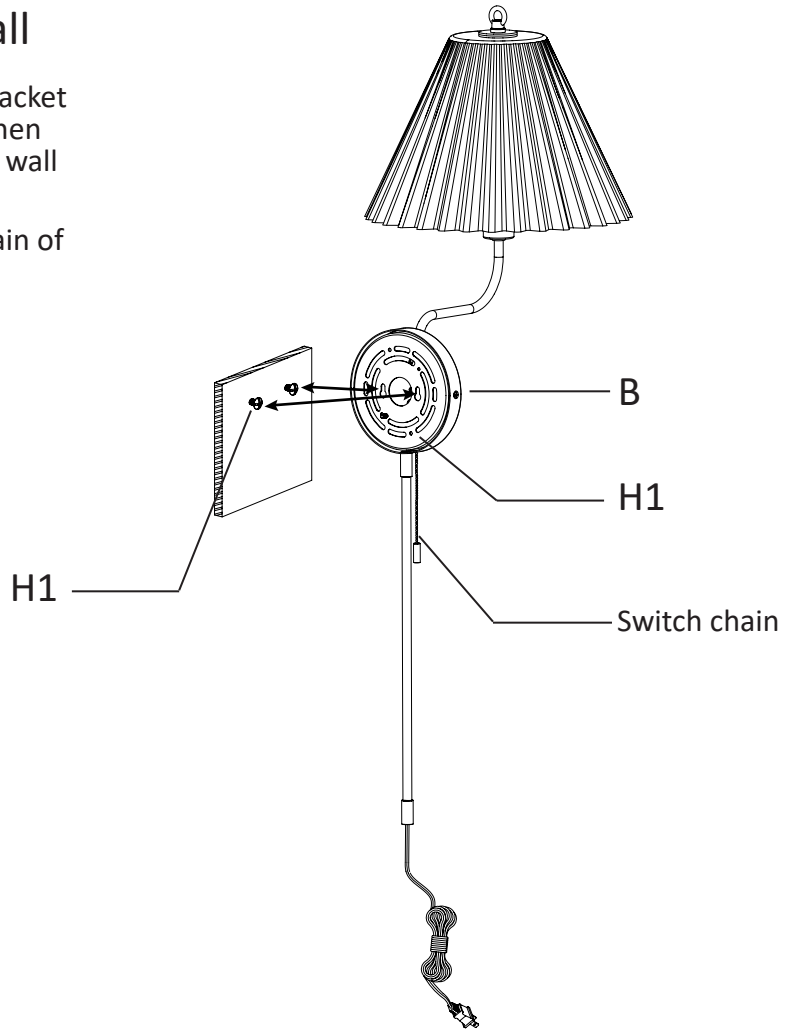

CLEANING

- Do not use any cleaners with chemicals, solvents, or harsh abrasives. Use only a dry, soft cloth to dust or wipe carefully.
- To clean the fixture, disconnect the power by turning off the circuit breaker or by removing the fuse at the fuse box. Use a dry or slightly dampened, clean cloth to wipe the exterior surface of the fixture.

TROUBLESHOOTING

- The light does not come on at all:
  - a) Check whether the bulbs were burned out.
  - b) Make sure the wall switch is on.
  - c) Make sure the wiring is correct.
  - d) Make sure the power supply is turned on.
  - e) Make sure the cord is plugged into an outlet.
  - f) Make sure the circuit breaker is set in the “ON” position.
- Fuse blows or circuit trips when light is turned on.
  - a) Check for crossed wires, ensure wiring is correct.