Product installation diagram

Precautions:
1. Please read the assembly drawing carefully before installation, maintenance and repair, use or keep it safe
2. Please turn off the power before installing the lamp
3. Do not install on high temperature bodies, such as stoves, gas, exhaust pipes, etc., which may damage the lamps.
4. Do not modify the lamp privately to avoid malfunction.
5. Please clean it regularly, check it, please turn off the power before cleaning, wipe the surface with a clean cloth,
do not wipe with acidic or alkaline chemical solvent.
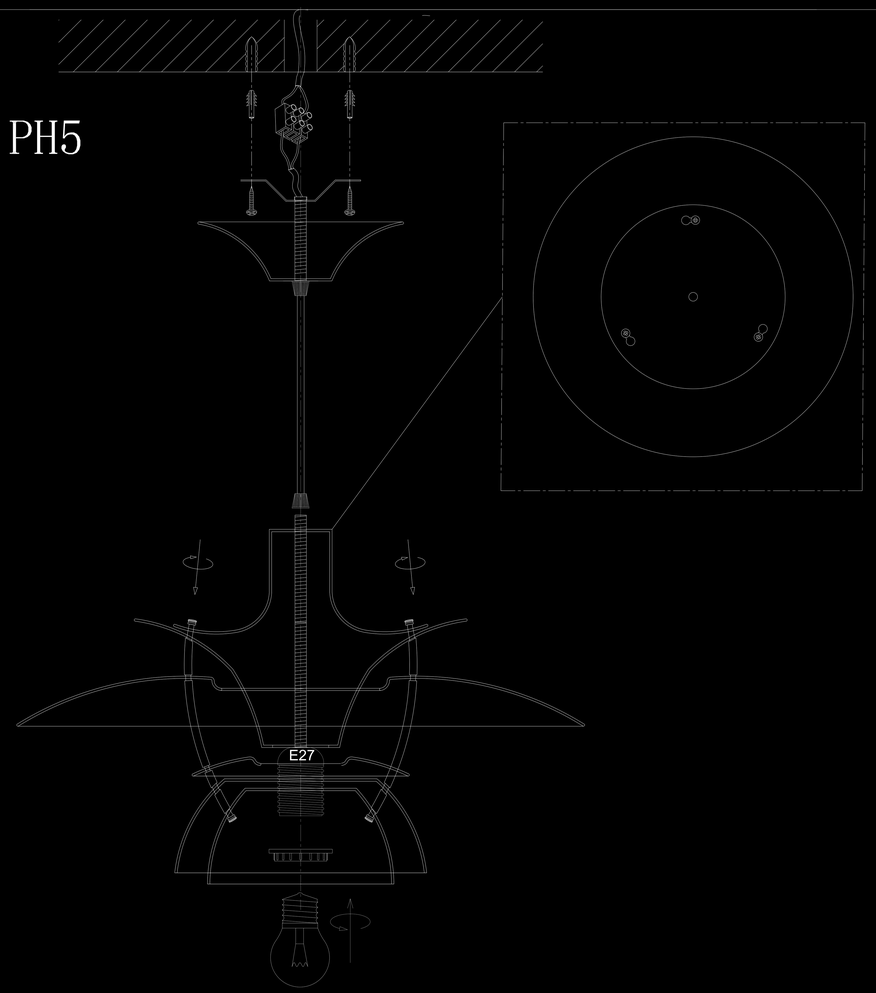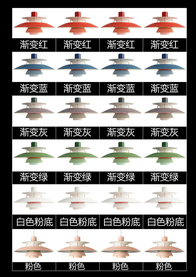
PH5