16502-B

STOP

DO NOT RETURN TO THE STORE!

If you discover missing or damaged parts,
or if you have questions about the building process,
please reach out to us directly for the fastest service.

24/7 Support

help.backyardproducts.com

- Answers to frequently asked questions
- Technical assistance and how-to videos
- Submit a help request
- Request replacement parts

Business Hours

(734) 242-6900

Monday - Friday ..... 8:00am - 6:00pm EST
Saturday - Sunday .....Closed



Did you enjoy building your shed?

JOIN OUR TEAM

AND MAKE UP TO $1,500/WEEK*

Call a Recruiter Today! 734-365-7000



Flexible schedule



No selling,
just building



Bonus incentives
available

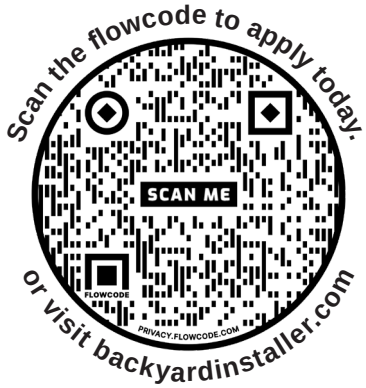

*based on number of completed installations

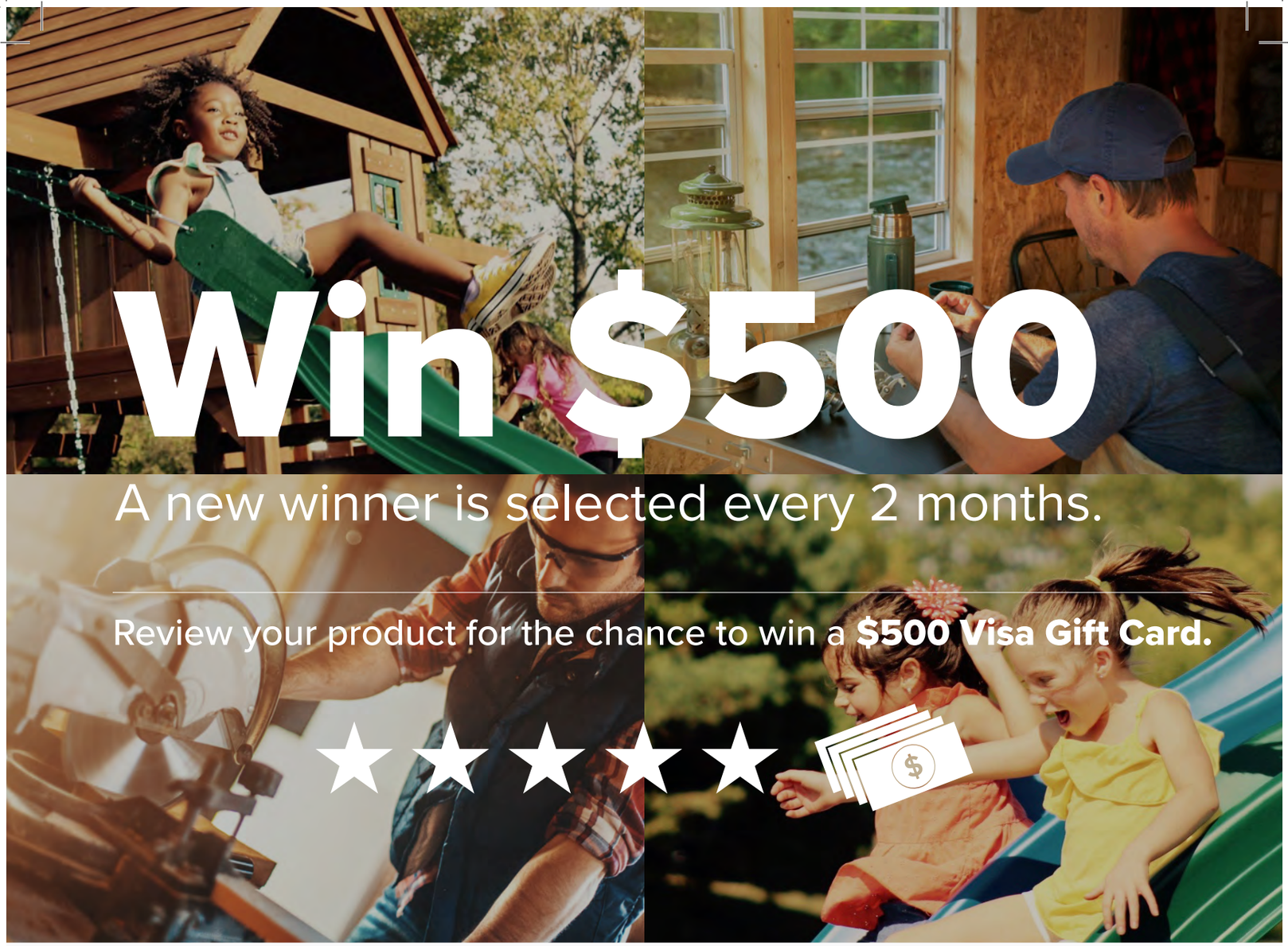

Win $500

A new winner is selected every 2 months.

Review your product for the chance to win a **$500 Visa Gift Card.**

How to Enter:



Open camera.
Aim. Tap.

SCAN ME

or visit backyardreviews.net

1 **Scan**
QR code above.

2 **Click**
'write a review'

3 **Find your product.**
Tell us what you think.

4 **Submit your review.**
You'll be notified by e-mail if you've won the $500 gift card.

Write a Backyard Products, LLC. product review at backyardreviews.net for a chance to win a $500 Visa gift card. No purchase necessary to enter. Must be legal U.S. resident (including DC & Puerto Rico), 18 or older to participate. Taxes on prize are responsibility of winner. Odds of winning depend on the number of eligible reviews received. Void where prohibited. For complete details and official rules, visit https://backyardreviews.net/sweepstakes-rules.

HEARTLAND

VALUE SERIES

16502-B	09/17/2025

ASSEMBLY MANUAL

CLASSIC 12' x 12' (365,8 x 365,8 cm)

	BUILDING SIZE	ACTUAL FLOOR SIZE
BASE MODEL	12' x 12' (365,8 x 365,8 cm)	12' x 12' (365,8 x 365,8 cm)
+1: 12' x 4' Extender	12' x 16' (365,8 x 487,7 cm)	12' x 16' (365,8 x 487,7 cm)
+1: 12' x 8' Extender	12' x 20' (365,8 x 609,6 cm)	12' x 20' (365,8 x 609,6 cm)
+1: 12' x 8' and +1: 12' x 4' Extender	12' x 24' (365,8 x 731,5 cm)	12' x 24' (365,8 x 731,5 cm)

KEEP THIS MANUAL FOR FUTURE REFERENCE

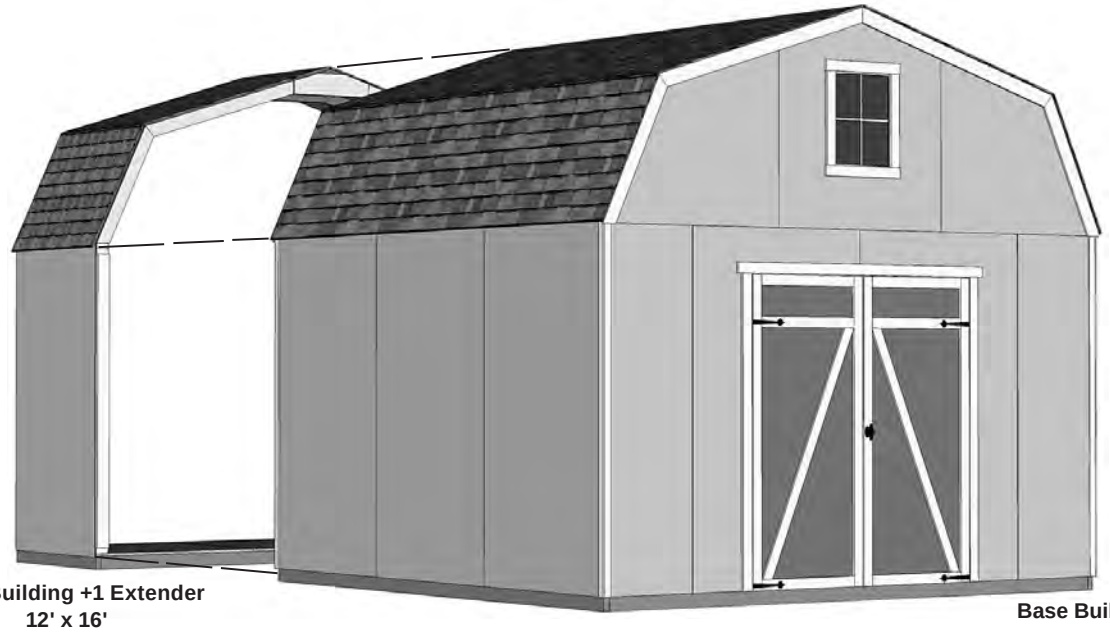

Base Building +1 Extender 12' x 16'

Base Building 12' x 12'

⚠ IMPORTANT! ⚠

READ INSTRUCTIONS THOROUGHLY PRIOR TO BEGINNING ASSEMBLY.

BEFORE YOU BEGIN

- **BUILDING RESTRICTIONS AND APPROVALS**

  Be sure to check local building department and homeowners association for specific restrictions and/ or requirements before building.

- **ENGINEERED DRAWINGS**

  Contact our Customer Service Team if engineered drawings are needed to pull local permits.

- **SURFACE PREPARATION**

  To ensure proper assembly you must build your shed on a level surface.

  Recommended methods and materials to level your shed are listed on page 10.

- **CHECK ALL PARTS**

  Inventory all parts listed on pages 5-8.

- **ADDITIONAL MATERIALS**

  You will need additional materials to complete your shed. See pages 3-4 for required and optional materials and quantities.

CONTACT OUR CUSTOMER SERVICE TEAM IF ANY PARTS ARE MISSING OR DAMAGED

- Order form and warranty at back of manual -

Call: 1-734-242-6900 email: customerservice@backyardproducts.com

TOOLS

Required

Phillips Screwdriver

Drill / Driver
3/8" Drill Bit
#2 Philips Drive Bit

Hammer

Level

Pencil

Tape Measure

Square or

Utility Knife
Shingle Blades

Caulk Gun

Paint Tools

Safety Glasses

Ladder

Optional

Tool Belt/ Nail Pouch

Tin Snips (for drip edge)

Chalk Line

Nail Gun
• gun nails

Gloves

Sawsall

Safety! Always use approved safety glasses during assembly.

HELPFUL REMINDER SYMBOLS

Look for these symbols for helpful reminders throughout this manual.

= Assistance Required; two or more people.

= Ensure squareness.

= Important required step or operation.

= Helpful assembly hint.

= Mark part with pencil.

BEGIN = Beginning of steps for assembly or installation.

FINISH = You have finished the assembly or installation.

= Level

ORIENT LUMBER AND TRIM FOR BEST APPEARANCE

Framing lumber is graded for structural strength and not appearance. Exterior trim is graded for one good side.

Always install the material leaving the best edge and best surface visible. Please remember that these blemishes in no way negatively affect the strength or integrity of our product. (See Fig. A, B, C.)

A

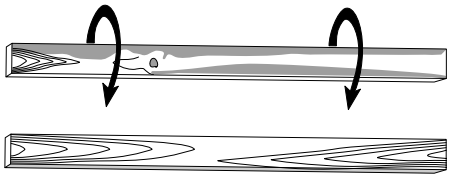

B

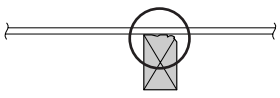

C

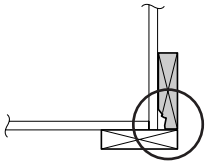

ADDITIONAL MATERIALS

FOUNDATION OR FLOOR MATERIALS

- If you purchased a separate floor kit, use instructions and materials in that kit to construct your floor.
- See the FLOOR LEVELING section on page 10 for recommended methods and suggested materials to properly level your floor, as this will vary depending on your specific site.

REINFORCED WOOD FLOOR FRAME (OPTIONAL)

IMPORTANT! Depending on your specific use you may want to construct a heavy duty floor frame by adding additional floor joists (shown below as shaded). Below is a list of additional materials (not included):

12x12'

- ☐ **x3** 2 x 4 x 12' (5,1 x 10,2 x 365,8 cm) Treated Lumber cut to 2 x 4 x 141" (5,1 x 10,2 x 358,1 cm)
- ☐ **x12** 3" (7,6 cm) hot-dipped galvanized nails

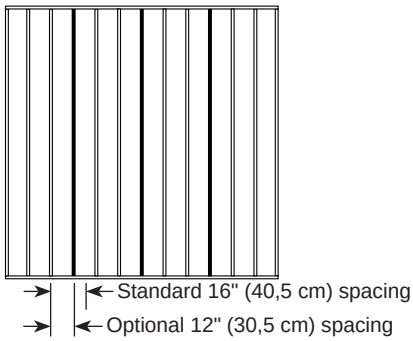

12x16'

- ☐ **x4** 2 x 4 x 12' (5,1 x 10,2 x 365,8 cm) Treated Lumber cut to 2 x 4 x 141" (5,1 x 10,2 x 358,1 cm)
- ☐ **x16** 3" (7,6 cm) hot-dipped galvanized nails

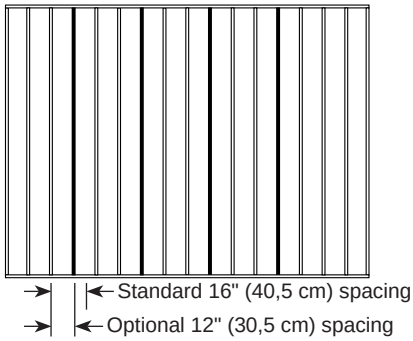

12x20'

- ☐ **x5** 2 x 4 x 12' (5,1 x 10,2 x 365,8 cm) Treated Lumber cut to 2 x 4 x 141" (5,1 x 10,2 x 358,1 cm)
- ☐ **x20** 3" (7,6 cm) hot-dipped galvanized nails

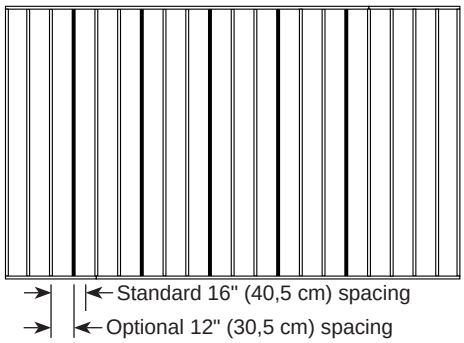

12x24'

- ☐ **x6** 2 x 4 x 12' (5,1 x 10,2 x 365,8 cm) Treated Lumber cut to 2 x 4 x 141" (5,1 x 10,2 x 358,1 cm)
- ☐ **x24** 3" (7,6 cm) hot-dipped galvanized nails

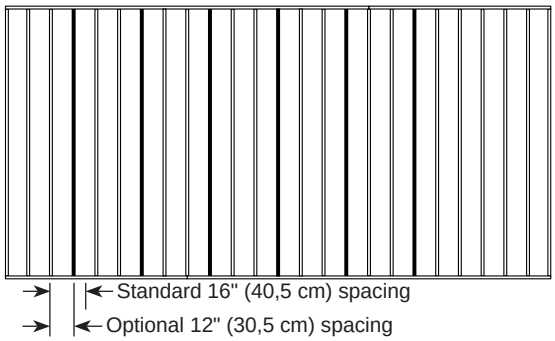

ADDITIONAL MATERIALS

COMPLETING YOUR SHED

You will need these additional materials:

	12x12'	12x16'	12x20'	12x24'
☐ 3-TAB SHINGLES (Bundles).....	8	10	13	15
☐ PAINT FOR SIDING (Gallons)..... Use 100% acrylic latex exterior paint. (2) coats recommended.	3	3	4	4
☐ 1" galvanized roofing nails (lbs). For shingles.	4	5	6	7

	12x12'	12x16'	12x20'	12x24'
☐ Paint for trim/Quart Use 100% acrylic latex exterior paint.	2	2	3	3
☐ Caulk Tubes ..... Use acrylic paintable latex exterior caulk.	4	5	6	7



	12x12'	12x16'	12x20'	12x24'
☐ 3" Framing Nails .....Boxed Nails -or- .....Strip/Coil Nails	7 / 500	7 / 500	7 / 500	8 / 600

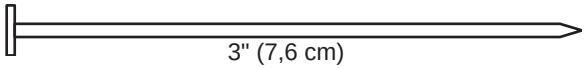

	12x12'	12x16'	12x20'	12x24'
☐ 2" Framing Nails .....Boxed Nails -or- .....Strip/Coil Nails	7 / 1450	8 / 1650	10 / 2000	11 / 2200

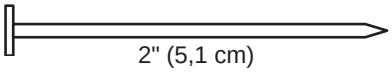

OPTIONAL MATERIALS

	12x12'	12x16'	12x20'	12x24'
☐ Drip Edge (Feet).....	40	40	40	40
☐ #15 Roofing Felt (Sq ft. to cover).....	227	302	375	450
☐ 1" Galvanized Roofing Nails (lbs).... For roofing felt.	1	1.5	3	3.5

REFER TO THE BACK OF THIS MANUAL AND THE MANUFACTURER'S INSTRUCTIONS FOR INSTALLATION OF SHINGLES, DRIP EDGE AND FELT.

PARTS IDENTIFICATION AND SIZES

Double letter part identification is stamped on some parts.

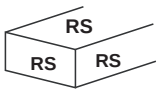

• Check these locations for part stamp.

WOOD SIZE CONVERSION CHART

Nominal Board Size	Actual Size
2 x 4	1-1/2" x 3-1/2" (3,8 x 8,9 cm)
1 x 4	3/4" x 3-1/2" (1,9 x 8,9 cm)
2 x 3	1-1/2" x 2-1/2" (3,8 x 6,3 cm)
1 x 3	3/4" x 2-1/2" (3,8 x 6,3 cm)

12x12'

GAMBREL 12' x 12' PARTS LIST

INVENTORY YOUR PARTS before you begin.
We suggest sorting parts by the category they are listed in.

WALL

- ☐ x5 **AL** — 2 x 4 x 7" (5,1 x 10,2 x 17,8 cm)
- ☐ x4 **QL** — 2 x 4 x 39" (5,1 x 10,2 x 99,1 cm)
- ☐ x4 **HVC** — 2 x 4 x 44-3/8" (5,1 x 10,2 x 112,7 cm)
- ☐ x6 **SP** — 2 x 4 x 48" (5,1 x 10,2 x 121,9 cm)
- ☐ x1 — 7/16" x 3-1/4" x 66-3/4" (1,1 x 8,3 x 170,2 cm) *OSB*
- ☐ x2 **AM** — 2 x 4 x 67" (5,1 x 10,2 x 170,2 cm)
- ☐ x2 **UM** — 2 x 4 x 68" (5,1 x 10,2 x 172,7 cm)
- ☐ x4 **YFA** — 2 x 4 x 68-1/2" (5,1 x 10,2 x 174 cm)
- ☐ x23 **AI** — 2 x 4 x 78-1/2" (5,1 x 10,2 x 199,4 cm)
- ☐ x4 **TJ** — 2 x 4 x 92-5/8" (5,1 x 10,2 x 235,3 cm)
- ☐ x6 **TP** — 2 x 4 x 96" (5,1 x 10,2 x 243,9 cm)

☐ x1 **GAA** — 1 x 3 x 5" (2,5 x 7,6 x 12,7 cm)
Used as a gauge block for 3/4" (1,9 cm) measurement.

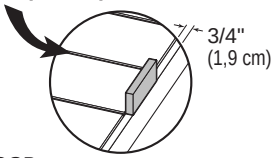

RAFTERS

- ☐ x2 — 7/16 x 3-1/2 x 24" (1,1 x 8,9 x 61 cm) *OSB*
- ☐ x12 — 6 x 24" (15,2 x 61 cm)
- ☐ x14 — Pre-assembled

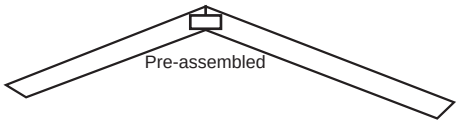

- ☐ x2 **SX** — 2 x 4 x 60" (5,1 x 10,2 x 152,4 cm)

TRIM

- ☐ x2 **KX** — 19/32" x 2-1/2" X 21-3/4"(1,6 x 7,6 x 55,2 cm)
- ☐ x2 **CYX** — 19/32" x 2-1/2" X 24-3/4"(1,6 x 7,6 x 62,9 cm)
- ☐ x2 **ZJL** — 5/8 x 4 x 36" (1,6 x 10 x 91 cm)
- ☐ x2 **ZJR** — 5/8 x 4 x 36" (1,6 x 10 x 91 cm)
- ☐ x2 **ZOL** — 5/8 x 4 x 60-7/8" (1,6 x 10 x 154,6 cm)
- ☐ x2 **ZOR** — 5/8 x 4 x 60-7/8" (1,6 x 10 x 154,6 cm)
- ☐ x8 — 3/8" x 1-3/4" x 83-1/4" (1 x 4,5 x 211,5 cm)

DOORS

- ☐ x2 **AH** — 19/32" x 2-1/2" x 26-5/8" (1,5 x 6,3 x 67,7 cm)
- ☐ x1 **AHR** — 19/32" x 2-1/2" x 62" (1,5 x 6,3 x 157,5 cm)
- ☐ x1 **AHL** — 19/32" x 2-1/2" x 62" (1,5 x 6,3 x 157,5 cm)
- ☐ x2 **OO** — 69" (175,3 cm) Door Stiffener
- ☐ x1 **ZJ** — 19/32" x 2-1/2" x 72" (1,5 x 6,3 x 182,9 cm)

PANEL & DOORS PARTS LIST

NOTE: Panel parts are not stamped with part identification.



☐ **x9**

3/8 x 48 x 84"
(1 x 121,9 x 213,4 cm)



☐ **x2**

3/8 x 23-7/8 x 84"
(1 x 60,6 x 213,4 cm)

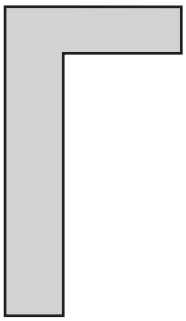

☐ **x1**

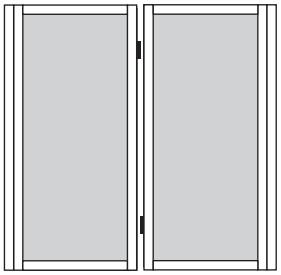

☐ **x1** ☐ **x1**

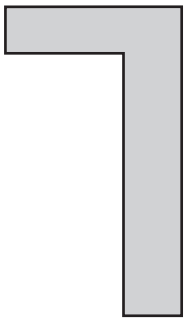

☐ **x1**

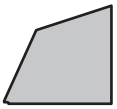

☐ **x2**

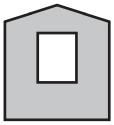

☐ **x1**

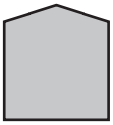

☐ **x1**

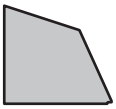

☐ **x2**

ROOF PANELS

Roof panels are 7/16" (1,1 cm) thick.

☐ **x2**



11-7/8" x 96"
(30,2 cm x 243,8 cm)

☐ **x2**

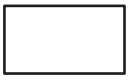

23-7/8" x 48"
(60,6 x 121,9 cm)

☐ **x2**

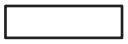

11-7/8" x 48"
(30,2 x 121,9 cm)

☐ **x2**

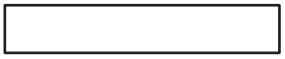

12-1/2" x 96"
(31,8 x 243,8 cm)

☐ **x2**



48" x 96"
(121,9 x 243,8 cm)

☐ **x2**

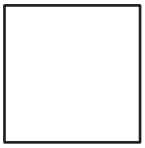

47-7/8" x 48"
(121,6 x 121,9 cm)

☐ **x2**



23-7/8" x 96"
(60,6 x 243,8 cm)

☐ **x2**



12-1/2" x 48"
(31,8 x 121,9 cm)

LOFT PARTS LIST

Loft panels are 7/16" (1,1 cm) thick.

☐ **x1** **NK**

2 x 3 x 48"
(5,1 x 7,6 x 121,9 cm)

☐ **x1** **PT**

2 x 3 x 96" (5,1 x 7,6 x 243,8 cm)

☐ **x4** **SP**

2 x 4 x 48"
(5,1 x 10,2 x 121,9 cm)

☐ **x4** **TP**

2 x 4 x 96" (5,1 x 10,2 x 243,8 cm)

☐ **x1**

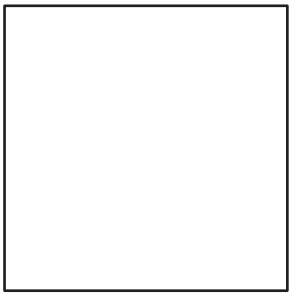

40-7/8" x 48" (103,8 x 121,9 cm)

☐ **x1**

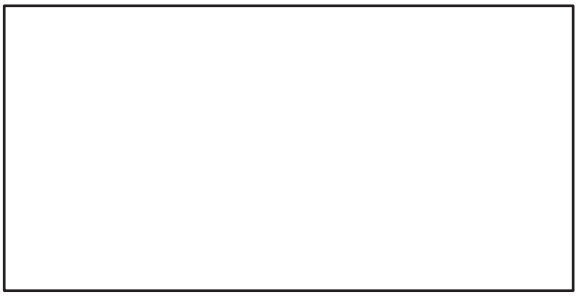

48" x 96" (121,9 x 243,8 cm)

FASTENER/HARDWARE BAG (Shown Actual Size)

☐ **x200**  2" (5,1 cm)

☐ **x110** 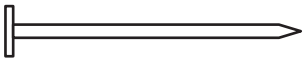 1-1/2" (3,8 cm)

☐ **x85**  3" (7,6 cm)

☐ **x25**  2" (5,1 cm)

☐ **x2**  1-1/4" (3,2 cm)

☐ **x85**  3/4" (1,9 cm)

☐ **x12**  1/2" (1,3 cm)

NOTE:
If you are using a nail gun, nails may be used where screws are shown for quicker assembly. Length of nail must match screw length.

Other HARDWARE (Not Actual Size)

☐ **x4** 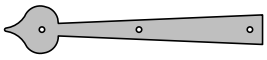

☐ **x12** 
3/4" (1,9 cm)

☐ **x11** 
3/4" (1,9 cm)

☐ **x1** 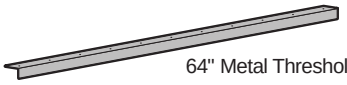
64" Metal Threshold

☐ **x4** 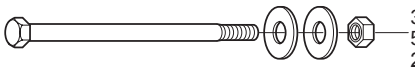
3/8" LOFT HDW. SET:
5-1/2" Hex bolt,
2 flat washers, lock nut

☐ **x1** 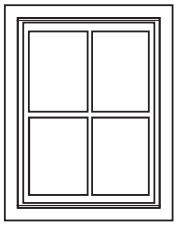 Window

☐ **x1** 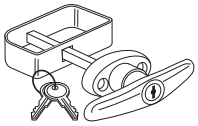

☐ **x2**  1-1/2" (3,8 cm)

☐ **x2** 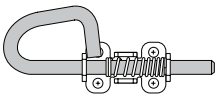

☐ **x8** 
3/4" (1,9 cm)

☐ **x2** 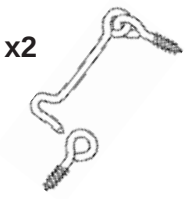

GAMBREL EXTENDER KIT PARTS LIST

Inventory your parts before you begin.
We suggest sorting parts by the category they are listed in.

Part identification is stamped on some parts.

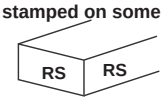

• Check these locations for part stamp.

WOOD SIZE CONVERSION CHART

Nominal Board Size	Actual Size
2 x 4	1-1/2" x 3-1/2" (3,8 x 8,9 cm)
1 x 4	3/4" x 3-1/2" (1,9 x 8,9 cm)
2 x 3	1-1/2" x 2-1/2" (3,8 x 6,3 cm)
1 x 3	3/4" x 2-1/2" (3,8 x 6,3 cm)

12' x 4' EXTENDER

WALL

- ☐ x6 **SP** — 2 x 4 x 48" (5,1 x 10,2 x 121,9 cm)
- ☐ x2 **SX** — 2 x 4 x 60" (5,1 x 10,2 x 121,9 cm)
- ☐ x4 **AI** — 2 x 4 x 78-1/2" (5,1 x 10,2 x 199,4 cm)
- ☐ x2 — 3/8 x 48 x 84" (1 x 121,9 x 213,4 cm)

RAFTERS

- ☐ x2 — 7/16" x 3-1/2" x 24" (1,1 x 8,9 x 61 cm)
- ☐ x4
- ☐ x4 — **Preassembled**

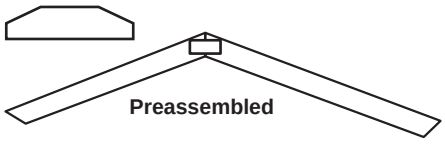

ROOF PANELS

Roof panels are 7/16" (1,1 cm) thick.

- ☐ x2 — 7/16" x 23-7/8" x 47-7/8" (1,1 x 60,6 x 121,6 cm)
- ☐ x2 — 7/16" x 47-7/8" x 48" (1,1 x 6 x 121,9 cm)
- ☐ x2 — 7/16" x 12-1/2" x 48" (1,1 x 31,8 x 121,9 cm)
- ☐ x2 — 7/16" x 11-7/8" x 48" (1,1 x 30,2 x 121,9 cm)

12' x 8' EXTENDER

WALL

- ☐ x4 **SX** — 2 x 4 x 60" (5,1 x 10,2 x 121,9 cm)
- ☐ x8 **AI** — 2 x 4 x 78-1/2" (5,1 x 10,2 x 199,4 cm)
- ☐ x6 **TP** — 2 x 4 x 96" (5,1 x 10,2 x 243,9 cm)
- ☐ x4 — 3/8 x 48 x 84" (1 x 121,9 x 213,4 cm)

RAFTERS

- ☐ x4 — 7/16" x 3-1/2" x 24" (1,1 x 8,9 x 61 cm)
- ☐ x8
- ☐ x8 — **Preassembled**

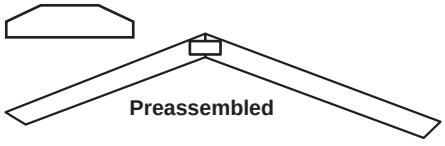

ROOF PANELS

Roof panels are 7/16" (1,1 cm) thick.

- ☐ x2 — 7/16" x 23-7/8" x 96" (1,1 x 121,6 x 243,9 cm)
- ☐ x2 — 7/16" x 47-7/8" x 96" (1,1 x 121,6 x 243,9 cm)
- ☐ x2 — 7/16" x 11-7/8" x 96" (1,1 x 30,2 x 243,9 cm)
- ☐ x2 — 7/16" x 12-1/2" x 96" (1,1 x 31,8 x 243,9 cm)

CONCRETE FOUNDATION

If you choose to install your kit on a concrete slab refer to the diagram below.
Attach the sill plates on the foundaton as shown, and continue on to page 14.

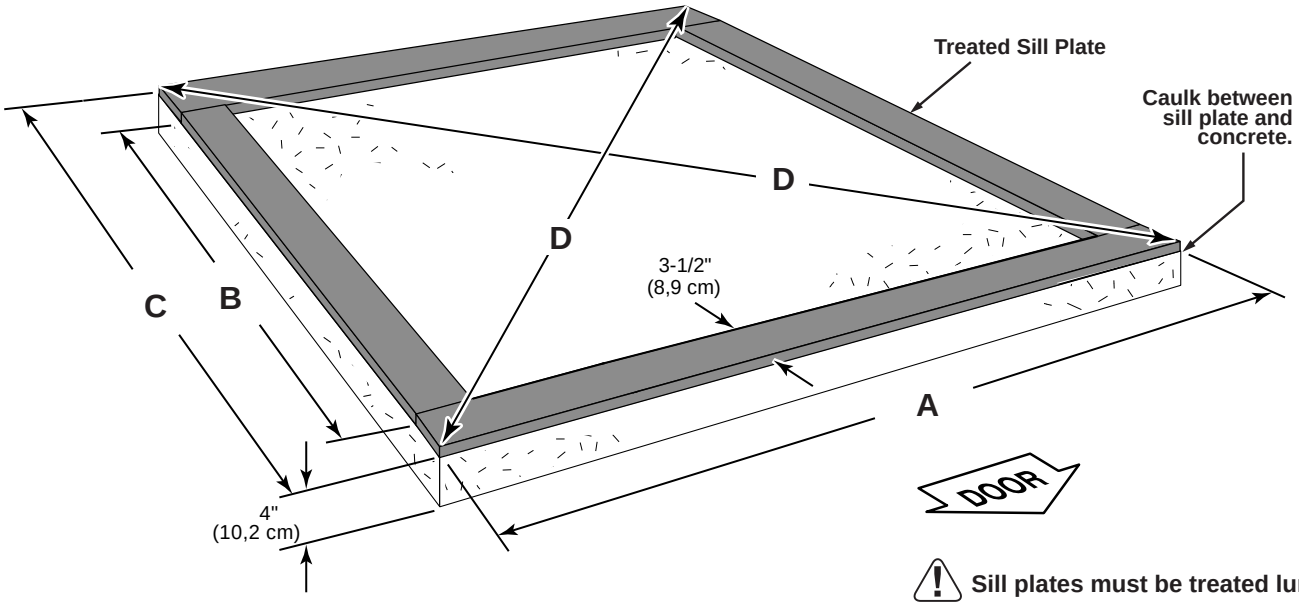

⚠ **Sill plates must be treated lumber.**

Building Size	Actual Floor Size	A	B	C	D
12'x12' (365,8 x 365,8 cm)	12'x12' (365,8 x 365,8 cm)	144" (365,8 cm)	137" (348 cm)	144" (365,8 cm)	203-5/8" (612,3 cm)

12' x 12' Building Requires:

- ☐ **x2 2 x 4 x 12' (5,1 x 10,2 x 304,8 cm)**
- ☐ **x2 2 x 4 x 12' (5,1 x 10,2 x 304,8 cm)** Cut down to: 137" (348 cm)
- ☐ **x1 Caulk**

Building Size	Actual Floor Size	A	B	C	D
12'x16' (304,8 x 487,7 cm)	12'x16' (304,8 x 487,7 cm)	144" (365,8 cm)	185" (469,9 cm)	192" (487,7 cm)	240" (609,6 cm)

12' x 16' Building Requires:

- ☐ **x2 2 x 4 x 12' (5,1 x 10,2 x 304,8 cm)**
- ☐ **x2 2 x 4 x 16' (5,1 x 10,2 x 426,7 cm)** Cut down to: 185" (469,9 cm)
- ☐ **x1 Caulk**

Building Size	Actual Floor Size	A	B	C	D
12'x20' (304,8 x 609,6 cm)	12'x20' (304,8 x 609,6 cm)	144" (365,8 cm)	233" (591,8 cm)	240" (609,6 cm)	279-7/8" (710,6 cm)

12' x 20' Building Requires:

- ☐ **x2 2 x 4 x 12' (5,1 x 10,2 x 304,8 cm)**
- ☐ **x2 2 x 4 x 16' (5,1 x 10,2 x 426,7 cm)**
- ☐ **x1 Caulk**
- ☐ **x1 2 x 4 x 8' (5,1 x 10,2 x 243,8 cm)** Cut (2): 48" (121,9 cm)

Building Size	Actual Floor Size	A	B	C	D
12'x24' (304,8 x 731,5 cm)	12'x24' (304,8 x 731,5 cm)	144" (365,8 cm)	281" (713,7 cm)	288" (619,8 cm)	322" (817,9 cm)

12' x 24' Building Requires:

- ☐ **x2 2 x 4 x 12' (5,1 x 10,2 x 304,8 cm)**
- ☐ **x2 2 x 4 x 16' (5,1 x 10,2 x 426,7 cm)**
- ☐ **x2 Caulk**
- ☐ **x2 2 x 4 x 8' (5,1 x 10,2 x 243,8 cm)** Cut (2): 89" (226,1 cm)

⚠ **Allow new concrete slabs to cure for at least seven (7) days.**

- **A treated 2 x 4" (5,1 x 10,2 cm) sill plate is required when installing your shed on concrete. Purchase full length treated lumber, or butt shorter pieces end-to-end and seal seams with caulk.**
- **Use a high quality exterior grade caulk beneath all sill plates.**
- **Fasten 2 x 4" (5,1 x 10,2 cm) sill plates to slab using approved concrete anchors (fasteners not included).**
- **Check local code for concrete foundation requirements.**

OPTIONAL WOOD FRAME FLOOR LEVELING OPTIONS

There are multiple ways to level your floor frame. Our recommended leveling method is shown below.
Leveling materials are not included in this kit.

PREFERRED METHOD - 4x4 TREATED RUNNERS (Typical for 12' x 12' Kit)

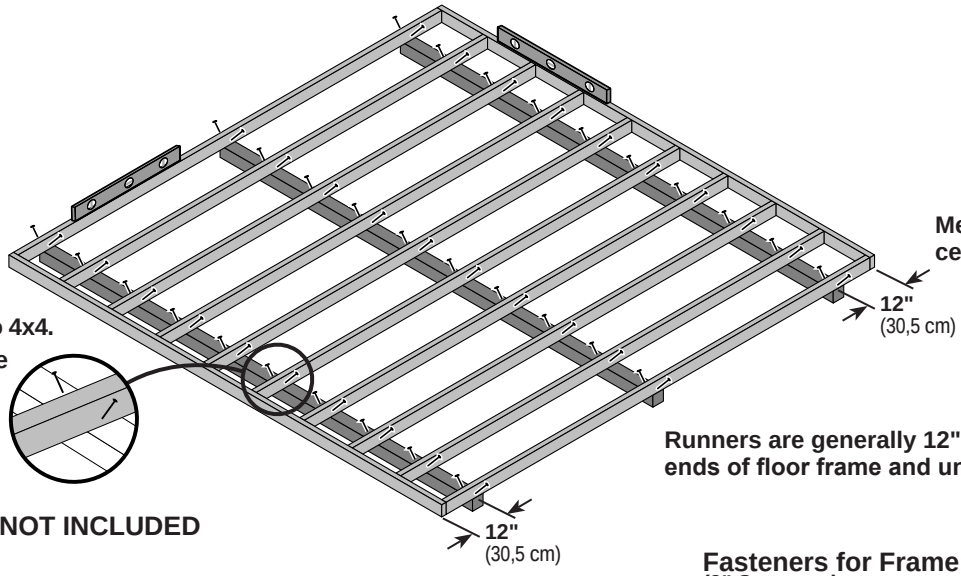

⚠ **FLOOR FRAME NOT INCLUDED**

MATERIAL REQUIRED: [TREATED LUMBER]

12' x 12'	☐ **x3** 4 x 4 x 12' (10,2 x 10,2 x 304,8 cm)	☐ **x60** 3" (7,6 cm)
12' x 16'	☐ **x3** 4 x 4 x 16' (10,2 x 10,2 x 487,7 cm)	☐ **x78** 3" (7,6 cm)
12' x 20'	☐ **(3)** 4 x 4 x 16' (10,2 x 10,2 x 487,7 cm) *and:* **(1)** 4 x 4 x 12' (10,2 x 10,2 x 144 cm) cut to (3) 48" (121,9 cm)	☐ **x96** 3" (7,6 cm)
12' x 24'	☐ **(3)** 4 x 4 x 16' (10,2 x 10,2 x 487,7 cm) *and:* **(3)** 4 x 4 x 8' (10,2 x 10,2 x 243,8 cm)	☐ **x114** 3" (7,6 cm)

Fasteners for Frame to 4x4:
(3" Screws shown as one option.)
Minimum 3" screws / exterior grade.

⚠ **Use only wood treated for ground contact and fasteners approved for use with treated wood.**

⚠ **Always support frame seams.**

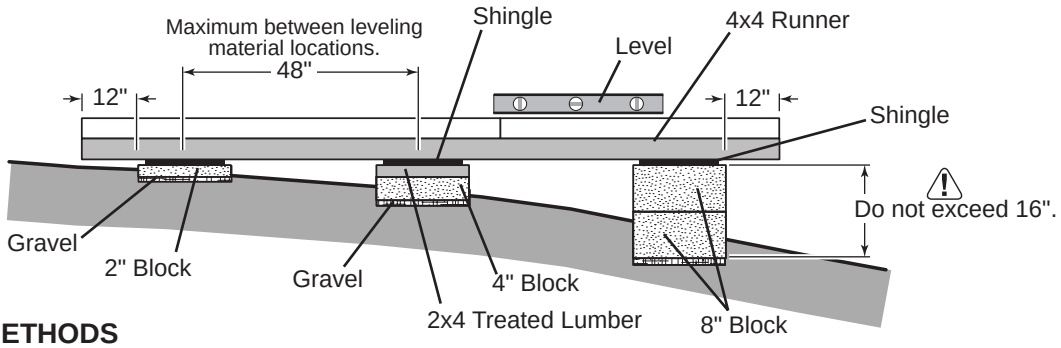

LEVELING METHODS

- **Level under 4x4 runners only.**
- **Locate leveling material 12" from ends of runners and no more than 48" apart.**
- **Asphalt shingles should be used between 4x4 runners and blocks or treated lumber. Never use shingles in direct contact with ground.**
- **For best results and aiding in water drainage use gravel under each concrete block.**

LEVELING MATERIALS

- ☐ **Gravel**
- ☐ **Solid Masonry Blocks in 1", 2", 4" or 8" thickness**
- ☐ **2x4 Treated Lumber**
- ☐ **Asphalt Shingles**

⚠ **Leveling higher than 16" not recommended.**

LEVELING & SQUARING THE FLOOR FRAME (Not Included)

STOP!

LEVEL AND SQUARE FLOOR FRAME

STOP!

Before attaching floor decking, it is important to level and square the floor frame.
A level and square floor frame is required to correctly construct your shed.

See page 10 for the preferred floor leveling method.

Use a level and ensure the frame is level before applying floor panels.

BEGIN

1 Check for frame squareness by measuring diagonally across the corners **(diagonal measurement D)**.
If the measurements are the same, the frame is square. Use the chart below to determine measurement D.

SHED SIZE	D
12' x 12'	203-5/8" (612,3 cm)
12' x 16'	240" (609,6 cm)
12' x 20'	279-7/8" (710,9 cm)
12' x 24'	322" (817,9 cm)

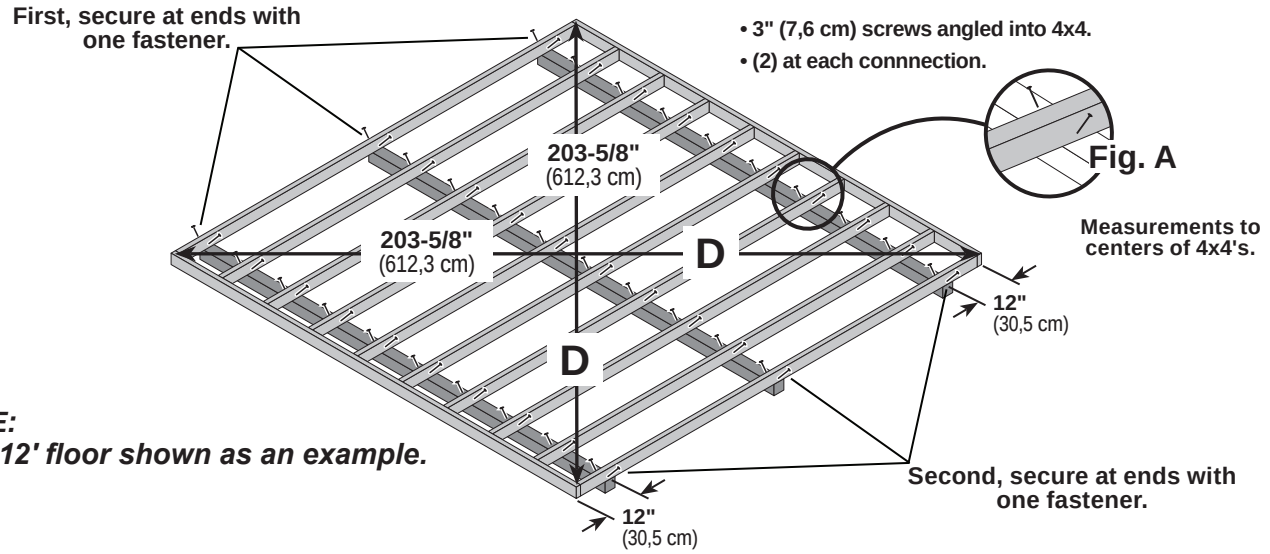

NOTE:
12' x 12' floor shown as an example.

4x4 runners are generally installed 12" (30,5 cm) from ends of floor frame and under any seams.

2 After the frame is level and square, secure one side of frame to 4x4 runners using one fastener at ends of each runner.

At the opposite end of the frame, secure the frame to 4x4 runners with one fastener at the ends of each runner, ensuring that the frame remains square.

Fasten the frame to the 4x4 runners with (2) 3" screws at each connection **(Fig. A).**

FINISH

Your floor frame is now level**.**

⚠ *IMPORTANT!*

NOTE: 12' x 12' Gambrel shown standard throughout manual

STOP! **Ensure the floor frame is level after installing floor panels. Re-level if needed.**

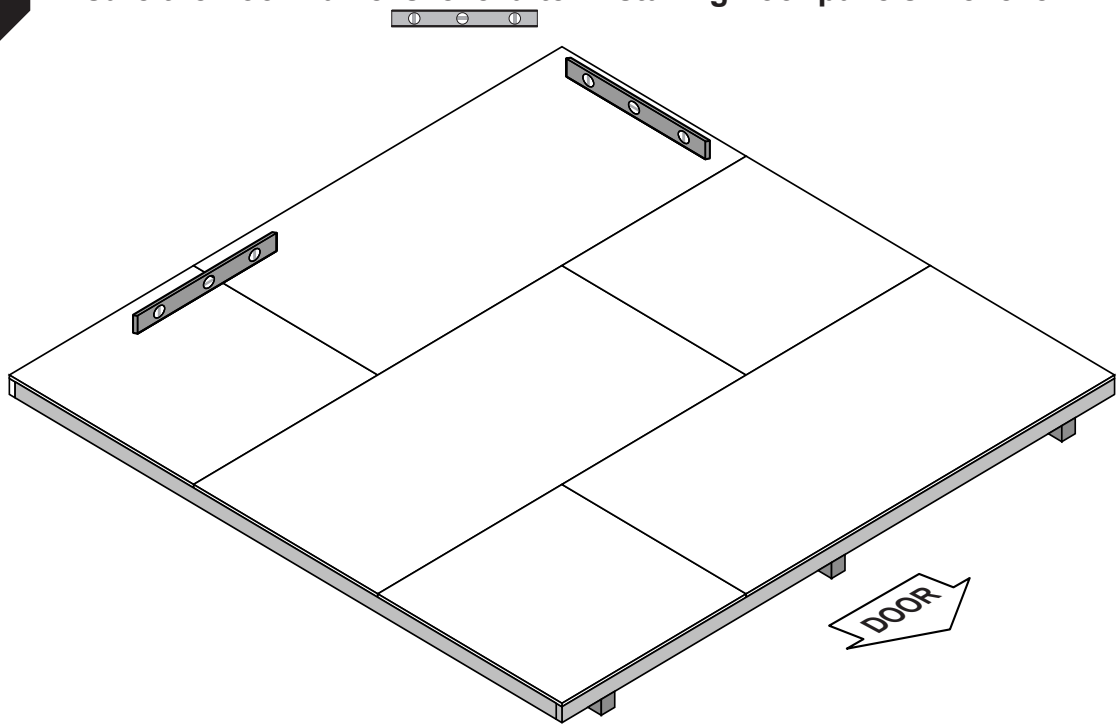

HINT:

- **The floor should used as a stable work surface for wall construction.**
- **Organize your assembly procedure during the build process to avoid over-handling of the walls.**

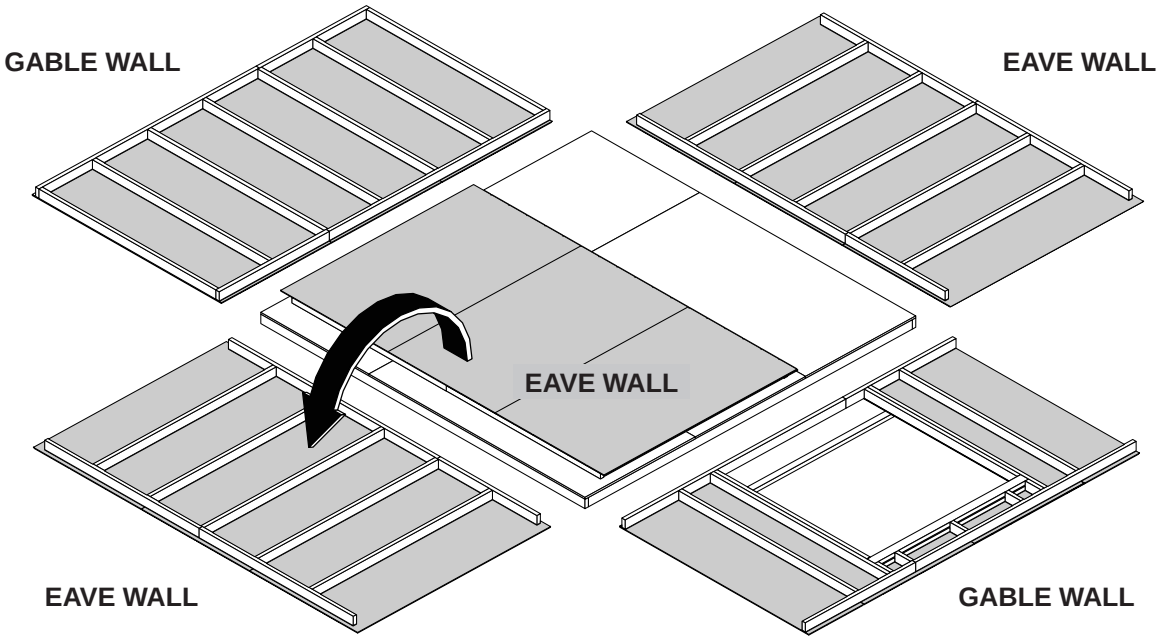

WALL INDEX

IMPORTANT! Build door header before building any walls (see page 14).

12' x 12'

After assembling the walls for your 12' x 12' shed, go to page 28 for wall installation.

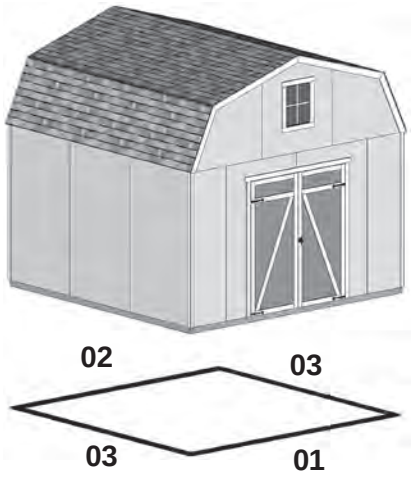

12' x 12'

Wall 01: Page 16
Wall 02: Page 18
Wall 03: Page 20 (Build 2 eave walls)

12' x 16'

After assembling the walls for your 12' x 16' shed, go to page 33 for wall installation.

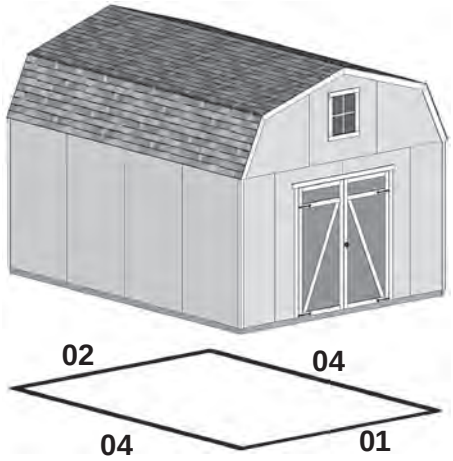

12' x 16'

Wall 01: Page 16
Wall 02: Page 18
Wall 04: Page 22 (Build 2 eave walls)

12' x 20'

After assembling the walls for your 12' x 20' shed, go to page 39 for wall installation.

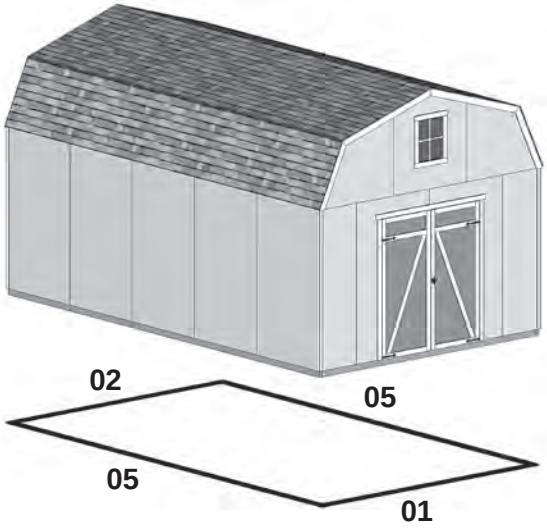

12' x 20'

Wall 01: Page 16
Wall 02: Page 19
Wall 05: Page 24 (Build 2 eave walls)

12' x 24'

After assembling the walls for your 12' x 24' shed, go to page 45 for wall installation.

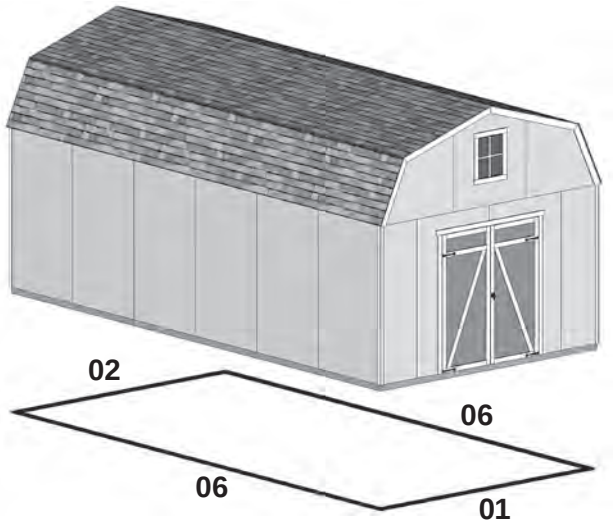

12' x 24'

Wall 01: Page 16
Wall 02: Page 18
Wall 06: Page 26 (Build 2 eave walls)

DOOR HEADER

STOP! ***Assemble this door header before building any walls!*** STOP!

PARTS REQUIRED:

x2 **AM**
2 x 4 x 67" (5,1 x 10,2 x 170,2 cm)

x1
7/16 x 3-1/4 x 66-3/4" (1,1 x 8,3 x 170,2 cm) *OSB*

x18
3" (7,6 cm)

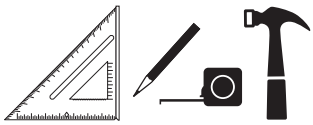

BEGIN

1 Place (1) **AM** and *OSB* end-to-end on flat surface, flush in middle.
Center ***OSB*** on top of **AM**.

Fasten together with 3" nails in the pattern shown.

2 Flip header assembly over and nail as shown on the other side.

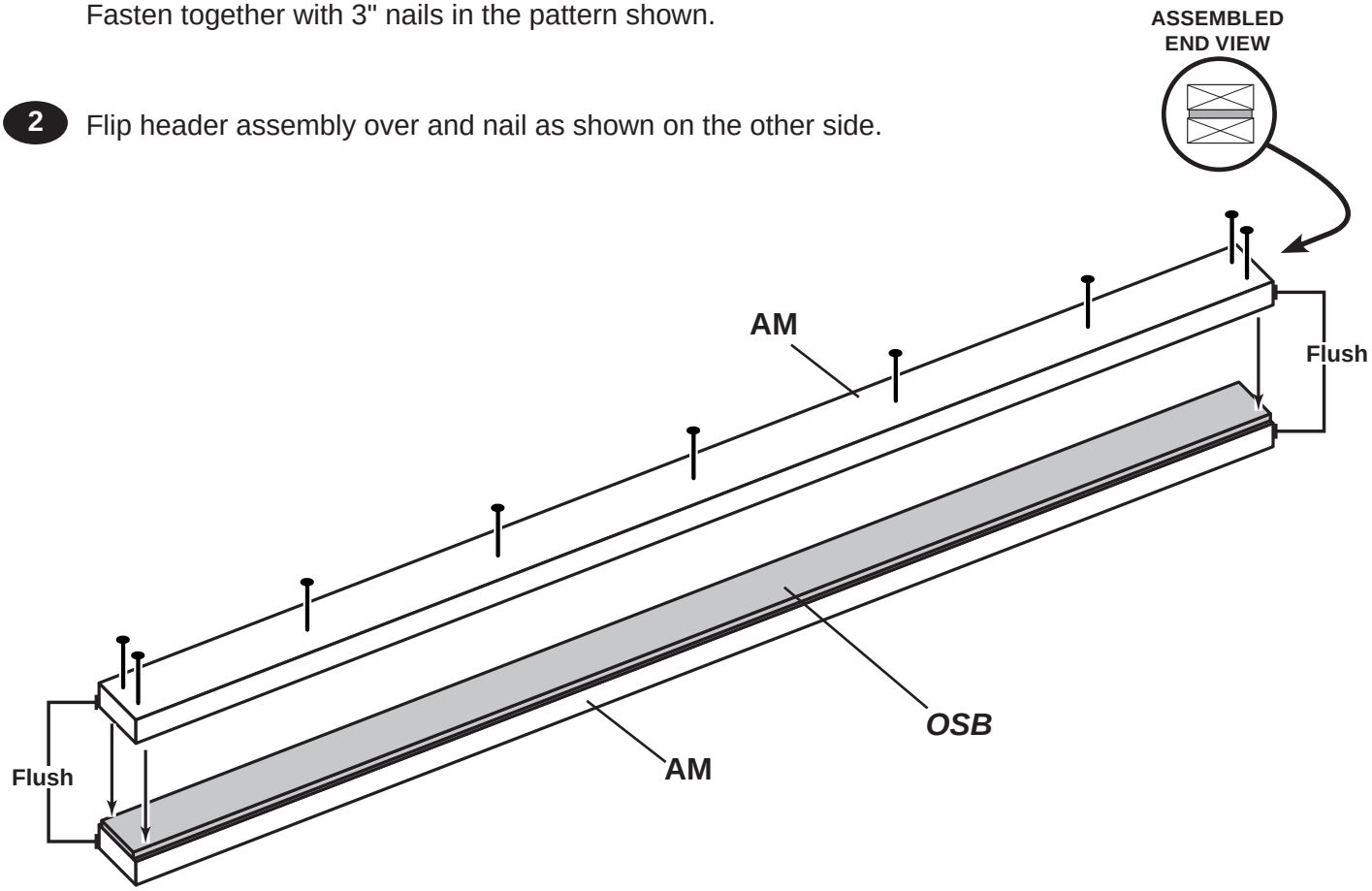

FINISH

Your door header is now assembled.

WALL PANEL INSTALLATION HINTS & EXAMPLES

PARTS REQUIRED:

x40

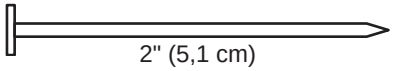

2" (5,1 cm)



x1

3/8 x 48 x 84"
(1 x 121,9 x 213,4 cm)



3/4" GAUGE BLOCK

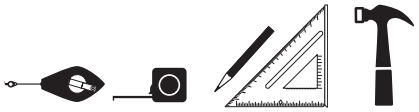

Ensure your wall is square by installing one panel and squaring frame.

Install all wall panels with the primed side facing up.

BEGIN

1 Place a **48" x 84"** panel on the wall frame, as shown.
Locate the panel flush to the top plate.
Use the gauge block to mark the 3/4" side measurement on the wall stud.
Secure panel with (2) 2" nails in the corners **(Fig. A).**

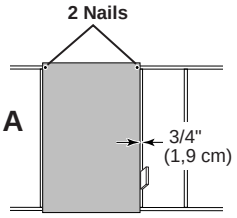

Fig. A

2 Move to the opposite end. Using the long edge of the panel as a lever, move the panel side-to-side until you have a 3/4" measurement on the wall stud.
Secure corner with (2) 2" nails **(Fig. B)**.
Secure panel with 2" nails spaced 6" apart on edges and 12" apart inside panel.

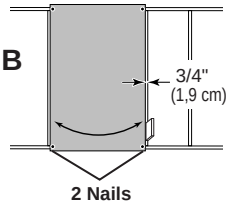

Fig. B

For squareness maintain 3/4" and 1-1/2" measurement along panel edge.

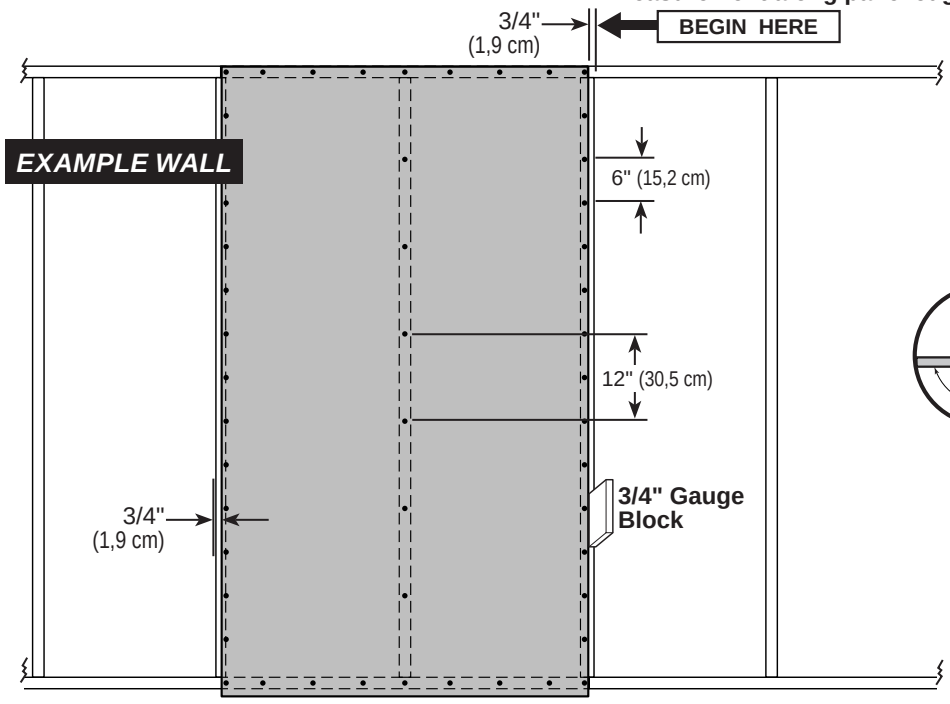

HINT

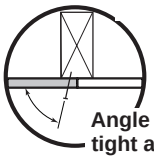

Angle nail to draw panels tight at seams.

GABLE WALL 01 WITH DOOR

PARTS REQUIRED:

x5 **AL** — 2 x 4 x 7" (5,1 x 10,2 x 17,8 cm)

x2 **SP** — 2 x 4 x 48" (5,1 x 10,2 x 121,9 cm)

x6 **AI** — 2 x 4 x 78-1/2" (5,1 x 10,2 x 199,4 cm)

x2 **TP** — 2 x 4 x 96" (5,1 x 10,2 x 243,8 cm)

x1 **Pre Assembled Header**

x2 **UM** — 2 x 4 x 68" (5,1 x 10,2 x 172,7 cm)

x72 — 3" (7,6 cm)

x6 — 3" (7,6 cm)

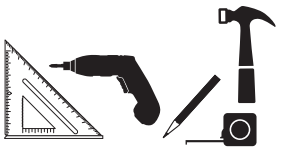

BEGIN

1 Orient parts on edge on floor as shown. Measure and mark from end of boards.
Orient **Pre Assembled Header** as shown **(Fig. A)**.
Secure with (2) 3" nails at each connection and (4) 3" nails at seams.

2 Fasten (3) middle parts **AL** to **Pre Assembled Header** with (2) 3" screws **(Fig. B)**.
Fasten (2) end **AL** to studs **AI** with (4) 3" nails at each side.
Secure parts **AL** to top plates with (2) 3" nails at each connection and (4) 3" nails at seam.

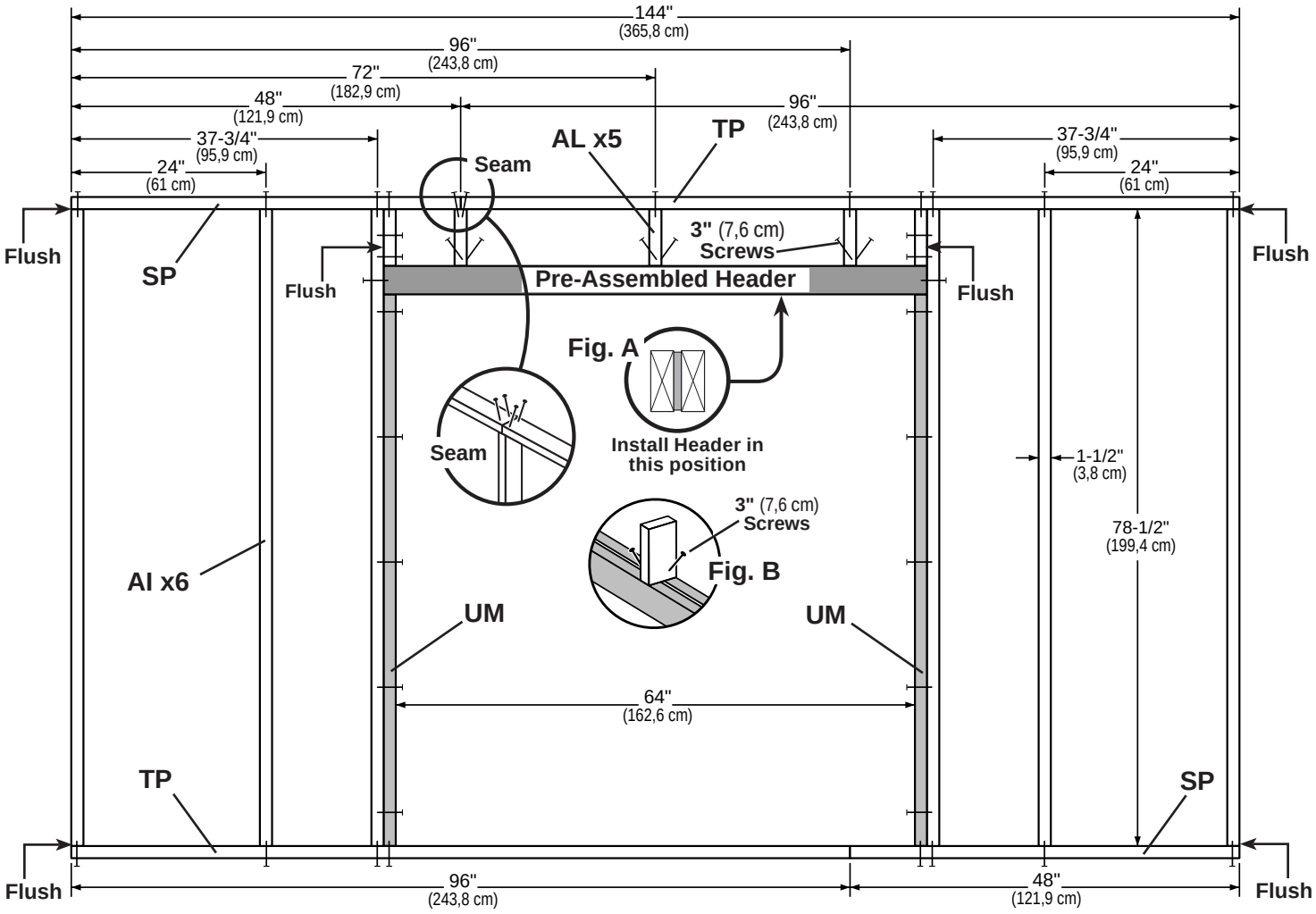

GABLE WALL 01 WITH DOOR

PARTS REQUIRED:

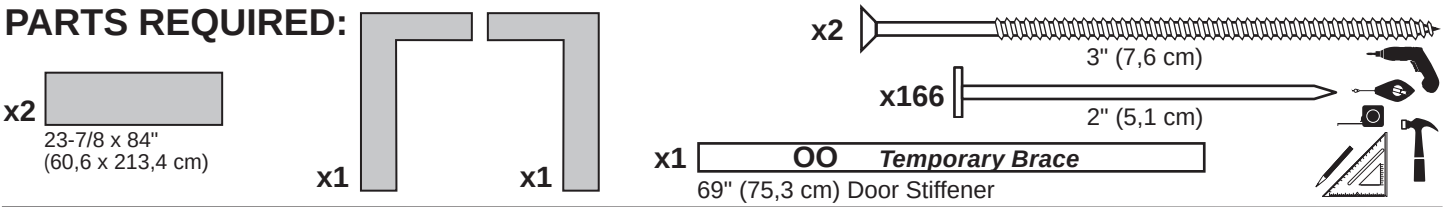

3 Install the left panel 1-1/2" from the top plate.
Use a 2x3 spacer for consistent measurement.
Secure panel with 2" nails spaced 6" apart on edges.

4 Install the right panel flush to installed panel, as shown.
Ensure 64" (162,8 cm) door measurement.
Use part **OO** as a temporary brace.
Secure with (2) 3" screws.

Secure panels with 2" nails spaced 6" apart on edges.

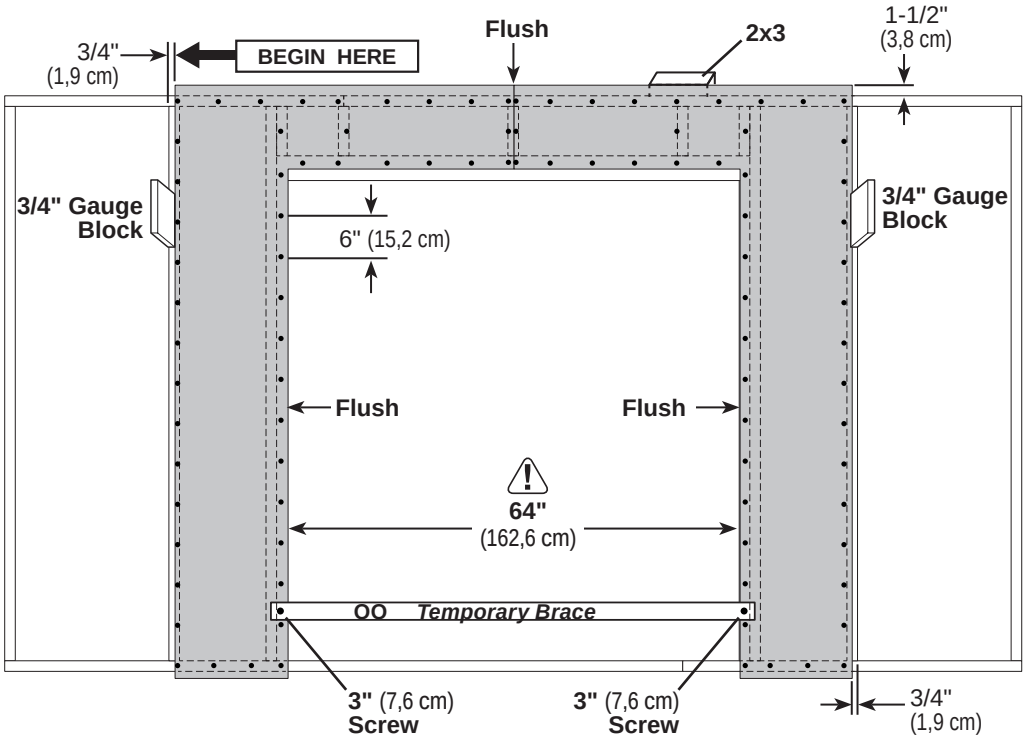

5 Install (2) **11-7/8" x 84"** panels flush to installed panels and 1-1/2" from the top plate.

Secure panels with 2" nails spaced 6" apart on edges.

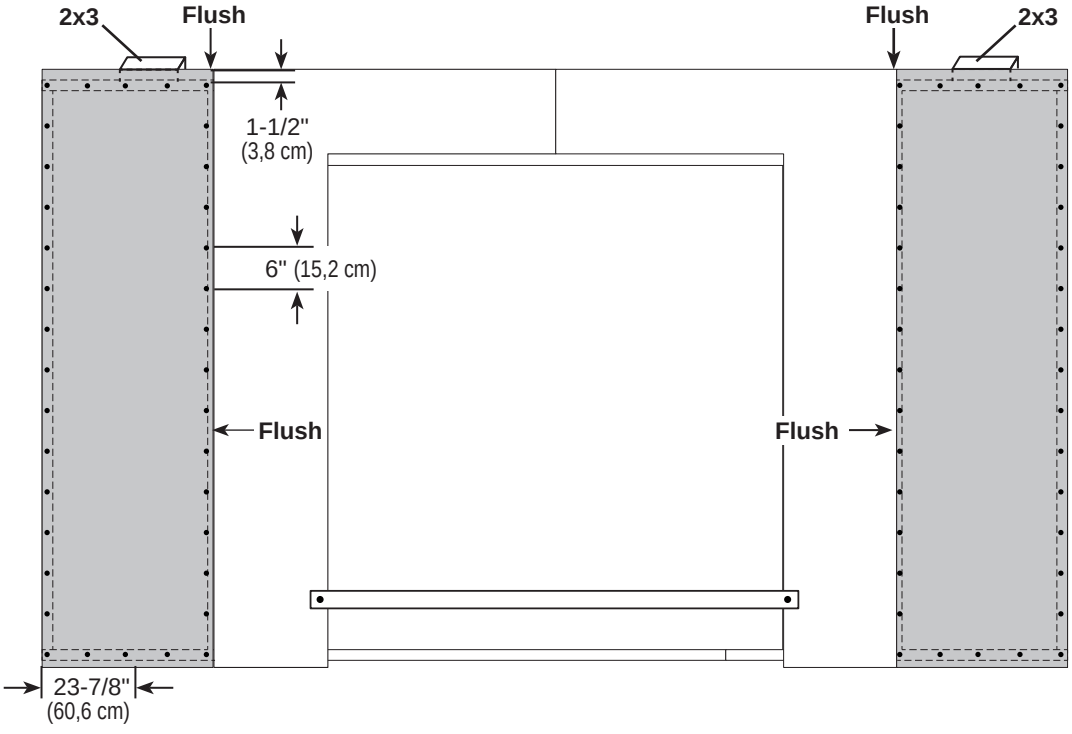

FINISH

Your 12' gable wall with door is now assembled. Carefully flip the wall over.

12' GABLE WALL 02

PARTS REQUIRED:

x2 SP
2 x 4 x 48" (5,1 x 10,2 x 121,9 cm)

x7 AI
2 x 4 x 78-1/2" (5,1 x 10,2 x 199,4 cm)

x2 TP
2 x 4 x 96" (5,1 x 10,2 x 243,8 cm)

x32

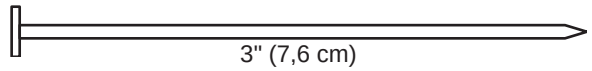



BEGIN

1 Orient parts on edge on floor as shown. Measure and mark from end of boards. Secure with (2) 3" nails at each connection and (4) 3" nails at seams.

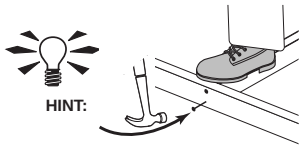

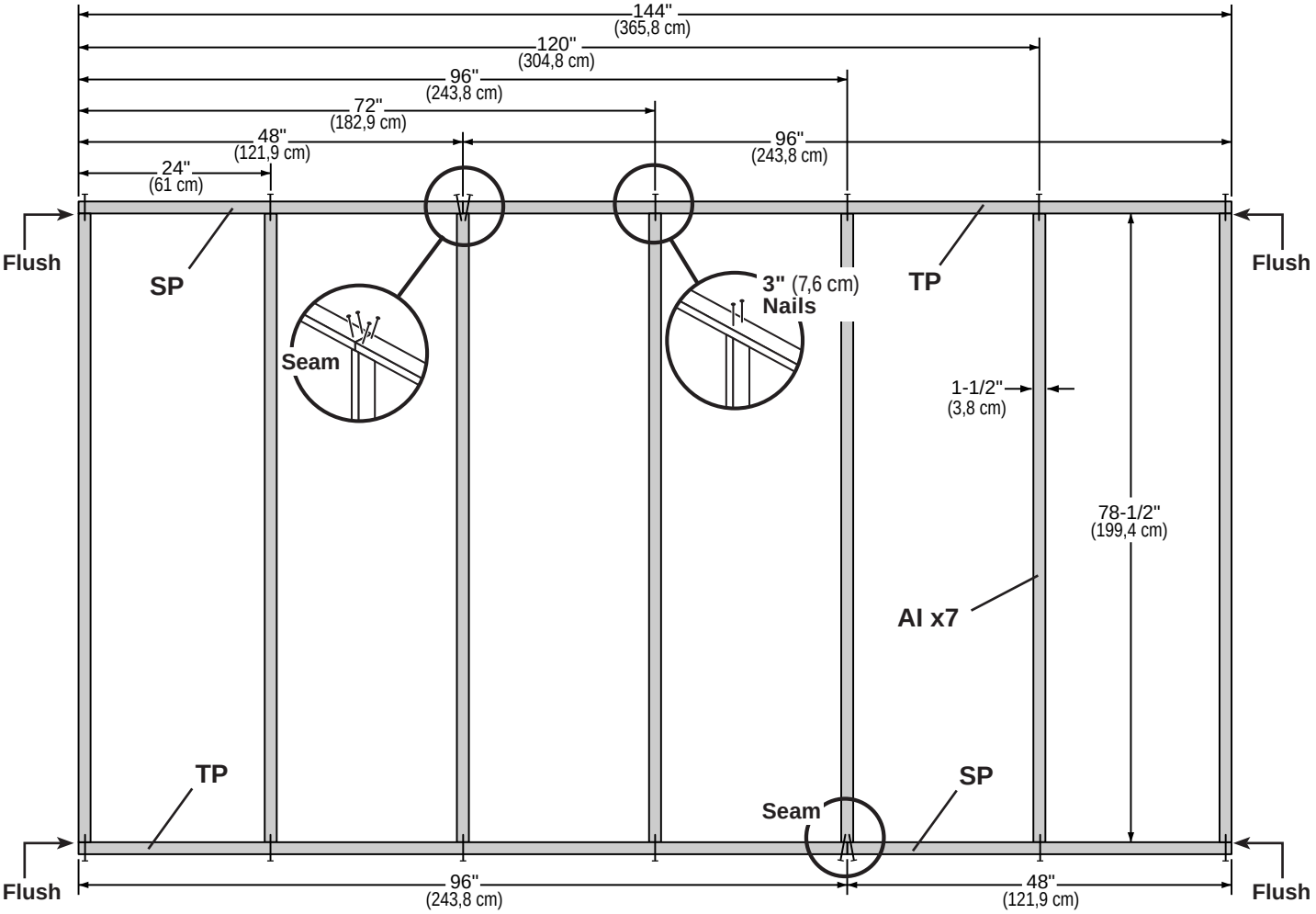

12' GABLE WALL 02

PARTS REQUIRED:

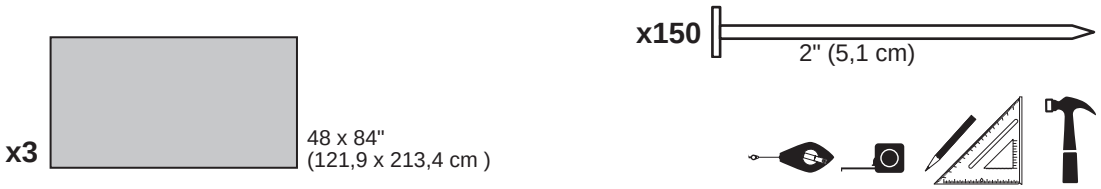

2

Install **48" x 84"** panel 1-1/2" from the top plate.

Use a 2x3 spacer for consistent measurement.

Secure panel with 2" nails spaced 6" apart on edges and 12" inside panel.

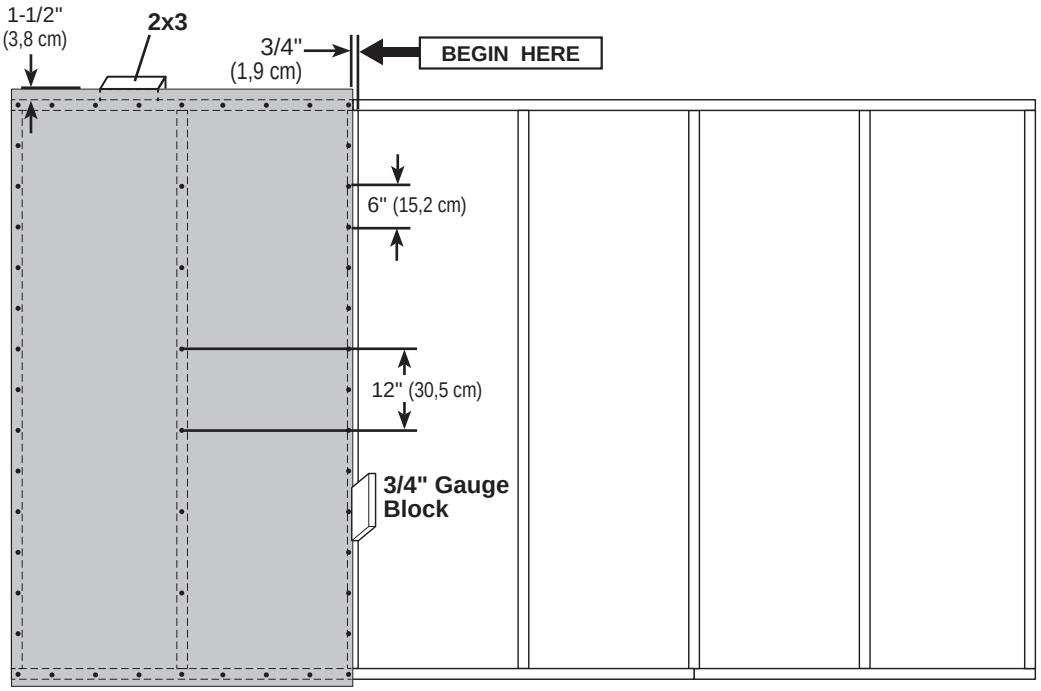

3

Install (2) **48" x 84"** panels flush to installed panels.

Locate panels 1-1/2" from the top plate.

Secure with 2" nails spaced 6" apart on edges and 12" apart inside panel.

Note the panel lip-edge/square edge orientation.

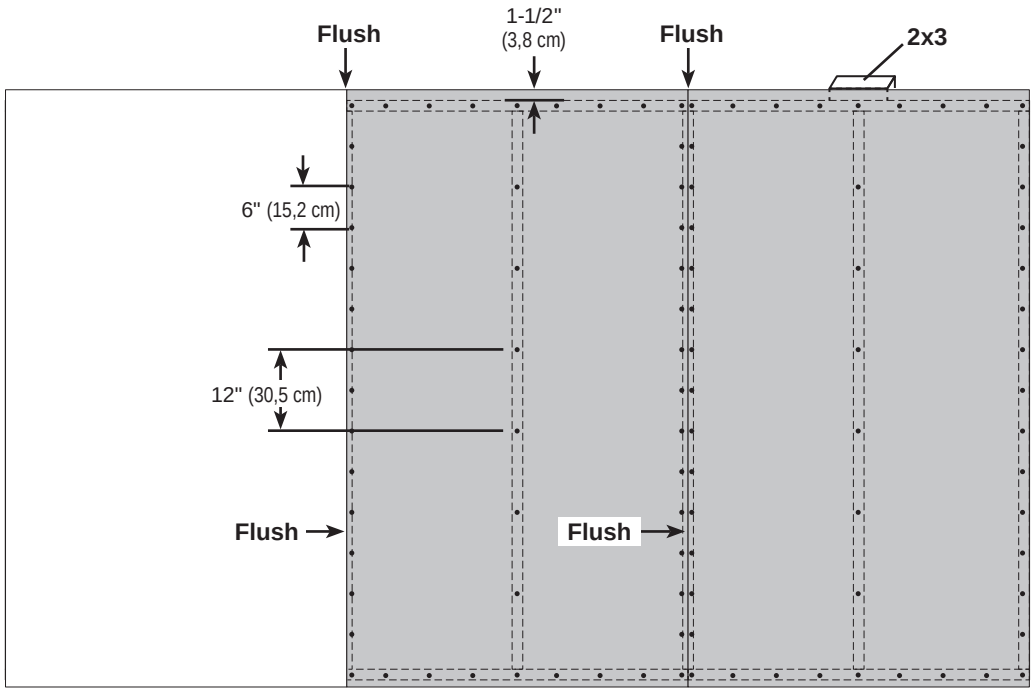

FINISH

Your 12' gable wall 02 is now assembled.
Carefully flip the wall over.

12' EAVE WALL 03

PARTS REQUIRED:

x48 3" (7,6 cm)

x1 HVC
2 x 4 x 44-3/8" (5,1 x 10,2 x 112,7 cm)

x2 YFA
2 x 4 x 68-1/2" (5,1 x 10,2 x 174 cm)

x1 TJ
2 x 4 x 92-5/8" (5,1 x 10,2 x 235 cm)

x5 AI
2 x 4 x 78-1/2" (5,1 x 10,2 x 199,4 cm)

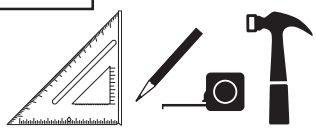

Build two identical walls.

BEGIN

1 Orient parts on edge on floor. Measure and mark from end of boards.

Secure with (2) 3" nails at each connection and (4) 3" nails at seams.

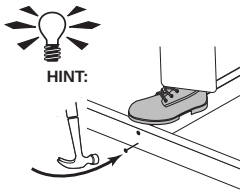

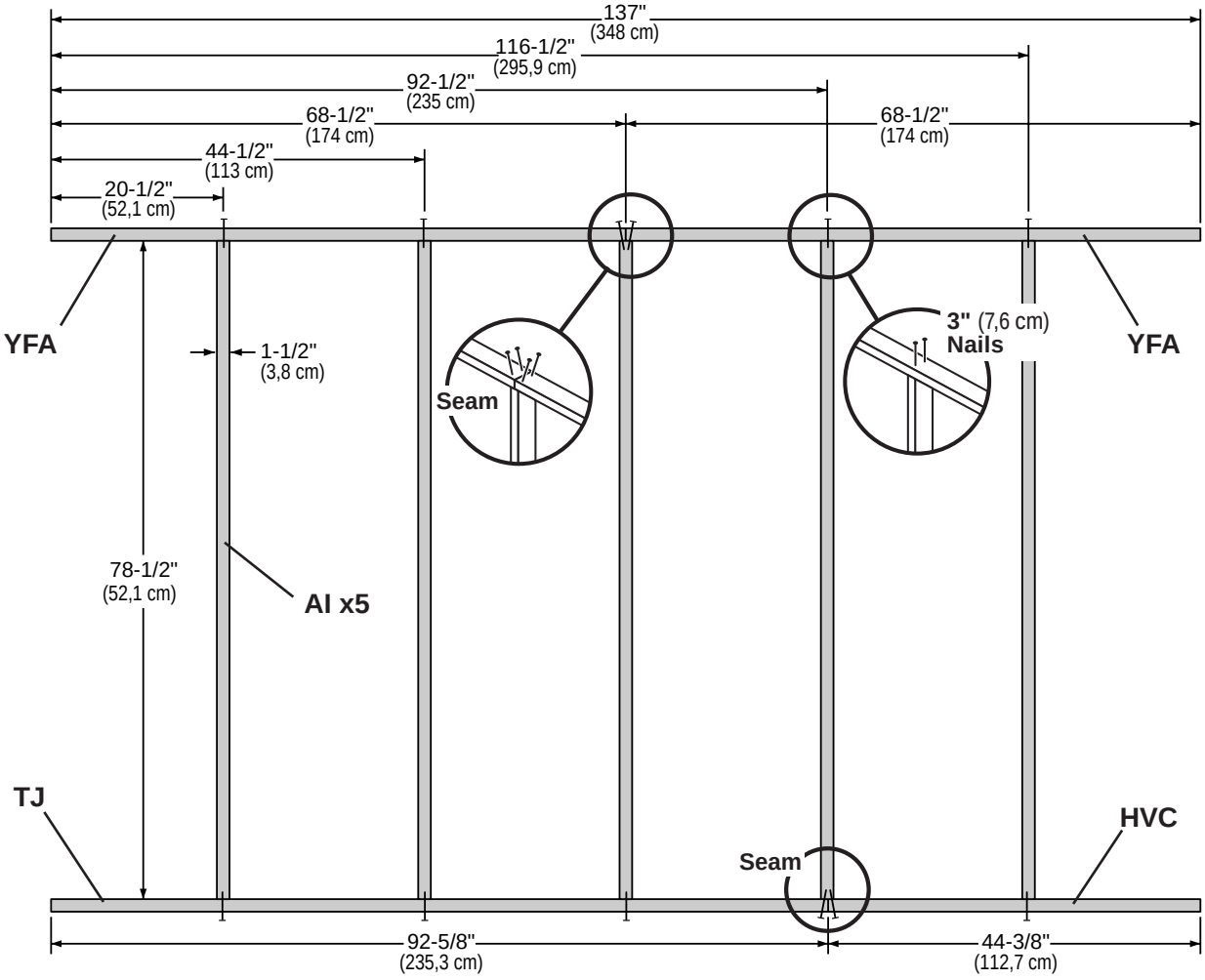

12' EAVE WALL 03

PARTS REQUIRED:



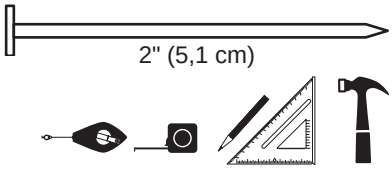

2

Install **48" x 84"** panel 1-1/2" from the top plate.

Use a 2x3 spacer for consistent measurement.

Secure panel with 2" nails spaced 6" apart on edges and 12" inside panel.

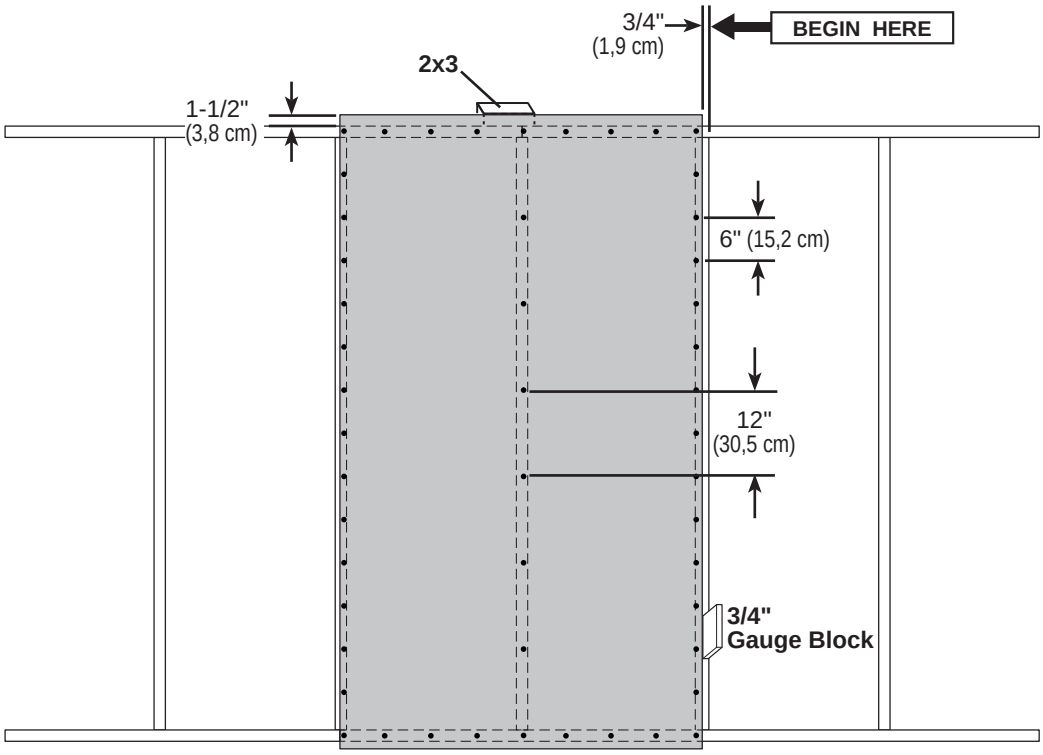

3

Install next (2) **48" x 84"** panels flush to installed panel.

Locate panels 1-1/2" from the top plate.

Secure with 2" nails spaced 6" apart on edges and 12" inside panel.

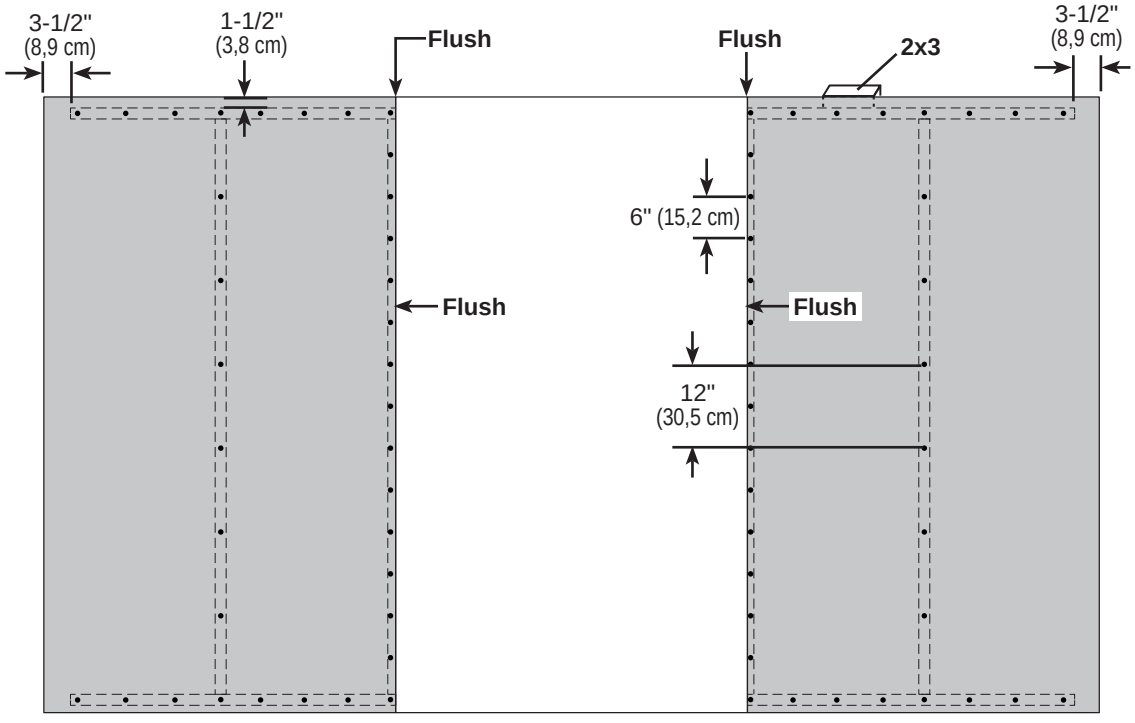

FINISH

Carefully flip the wall over. Repeat all steps to build the 2nd 12' eave wall.

Your 12' eave walls are now assembled.

16' EAVE WALL 04

PARTS REQUIRED:

x72 — 3" (7,6 cm)

x1 HVC — 2 x 4 x 44-3/8" (5,1 x 10,2 x 112,7 cm)

x7 AI — 2 x 4 x 78-1/2" (5,1 x 10,2 x 199,4 cm)

x2 SP — 2 x 4 x 48" (5,1 x 10,2 x 121,9 cm)

x1 TJ — 2 x 4 x 92-5/8" (5,1 x 10,2 x 235 cm)

x2 YFA — 2 x 4 x 68-1/2" (5,1 x 10,2 x 174 cm)

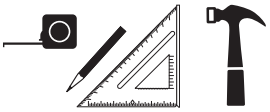

Build two identical walls.

✓BEGIN

1 Orient parts on edge on floor. Measure and mark from end of boards. Secure with (2) 3" nails at each connection and (4) 3" nails at seams.

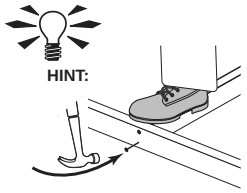

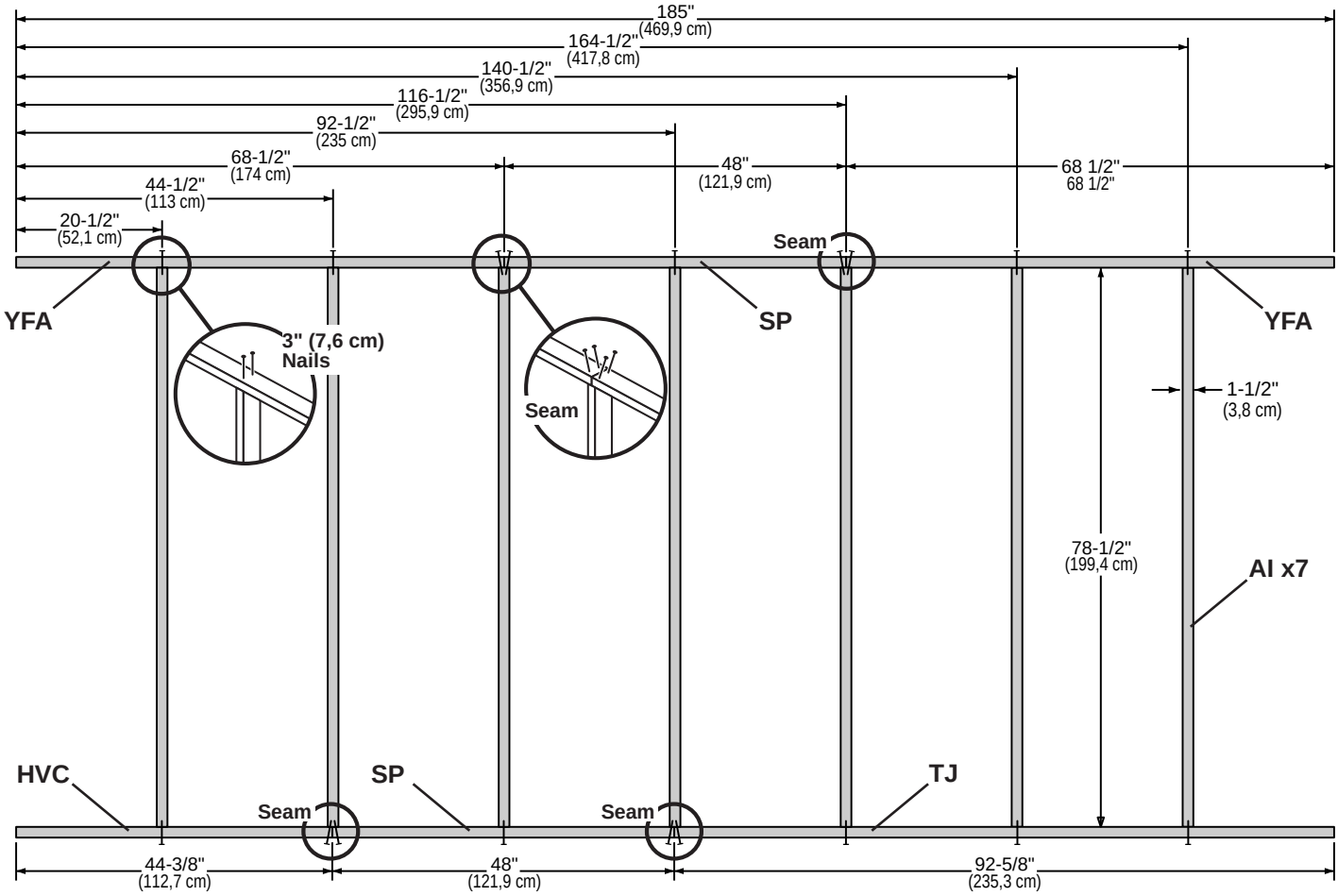

16' EAVE WALL 04

PARTS REQUIRED:



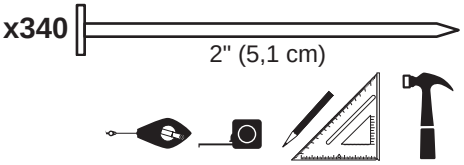

2

Install (1) **48" x 84"** panel 1-1/2" from the top plate.

Use a 2x3 spacer for consistent measurement.

Secure panel with 2" nails spaced 6" apart on edges and 12" inside panel.

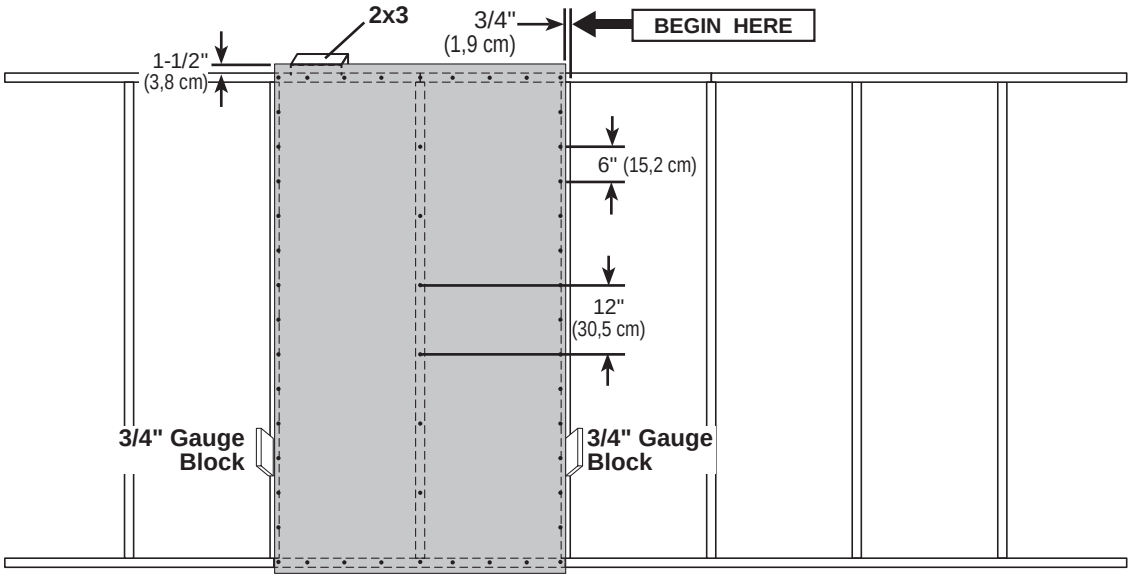

3

Install (3) **48" x 84"** panels flush to installed panels.

Locate panels 1-1/2" from the top plate.

Secure with 2" nails spaced 6" apart on edges and 12" apart inside panel.

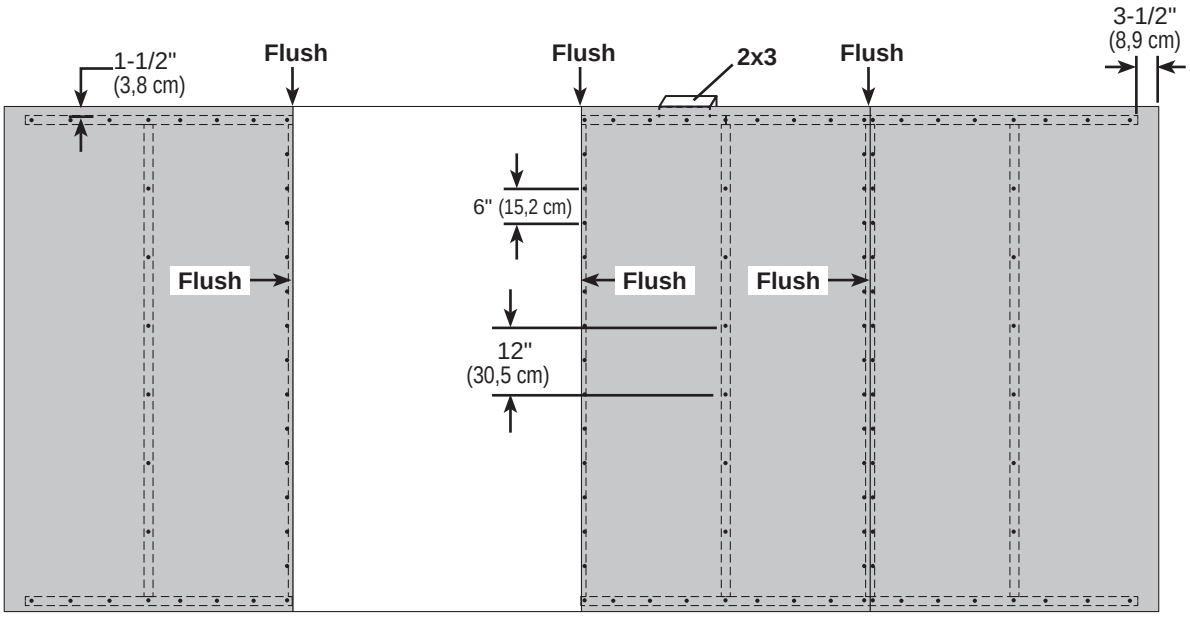

FINISH

Carefully flip the wall over. Repeat all steps to build the 2nd 16' eave wall.
Your 16' eave walls are now assembled.

20' EAVE WALL 05

PARTS REQUIRED:

x2 YFA
2 x 4 x 68-1/2" (5,1 x 10,2 x 174 cm)

x9 AI
2 x 4 x 78-1/2" (5,1 x 10,2 x 199,4 cm)

x1 TJ
2 x 4 x 92-5/8" (5,1 x 10,2 x 235 cm)

x2 TP
2 x 4 x 96" (5,1 x 10,2 x 243,8 cm)

x88
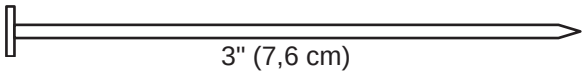
3" (7,6 cm)

x1 HVC
2 x 4 x 44-3/8" (5,1 x 10,2 x 112,7 cm)

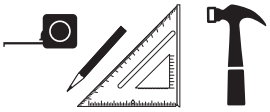

Build two identical walls.

BEGIN

1 Orient parts on edge on floor. Measure and mark from end of boards. Secure with (2) 3" nails at each connection and (4) 3" nails at seams.

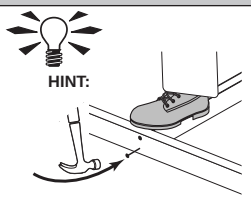

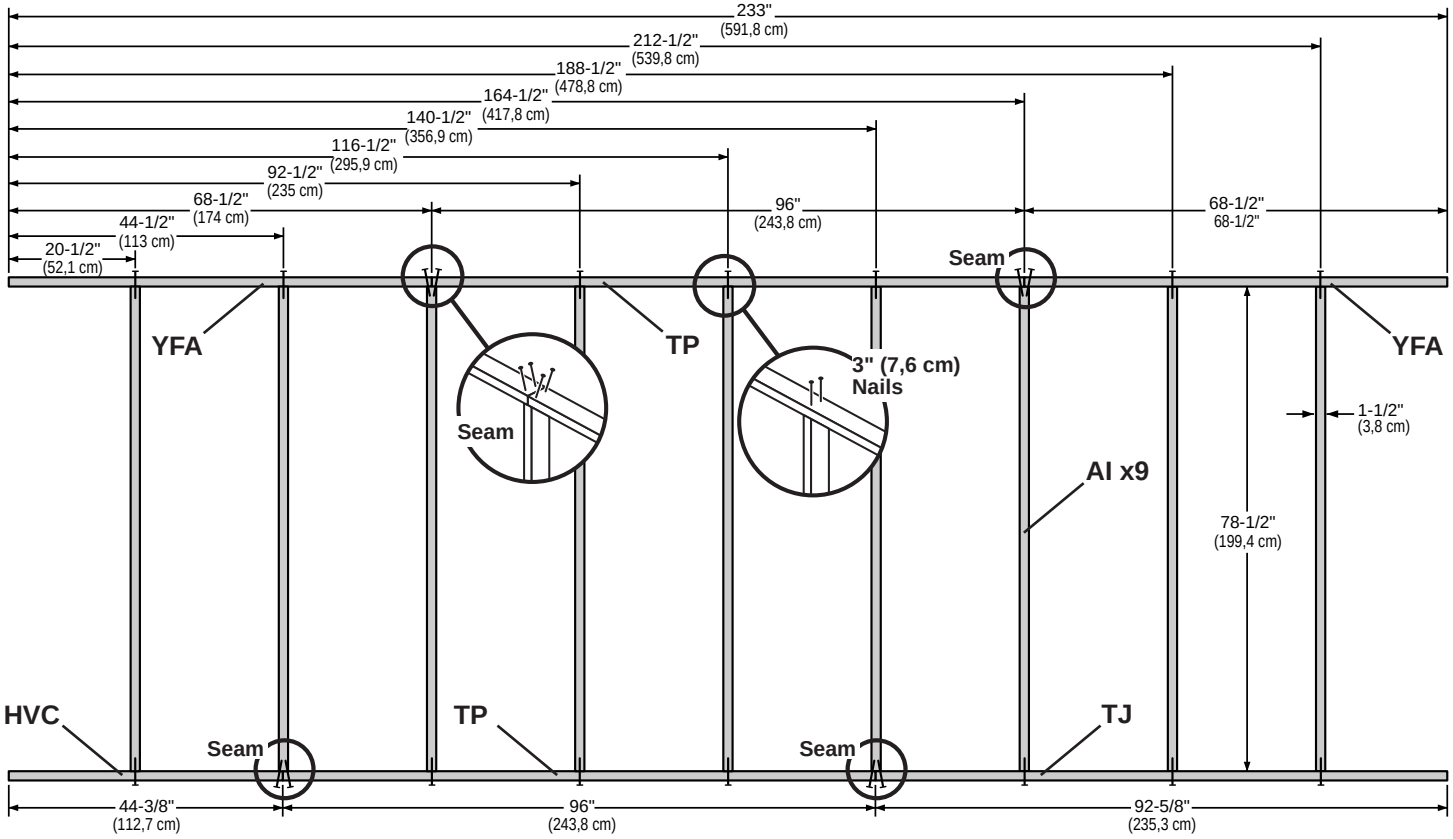

20' EAVE WALL 05

PARTS REQUIRED:



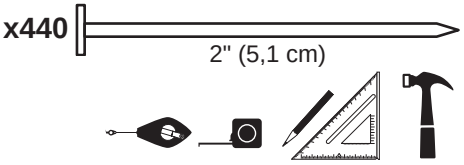

2 Install (1) **48" x 84"** panel 1-1/2" from the top plate. Use a 2x3 spacer for consistent measurement.

Secure panel with 2" nails spaced 6" apart on edges and 12" inside panel.

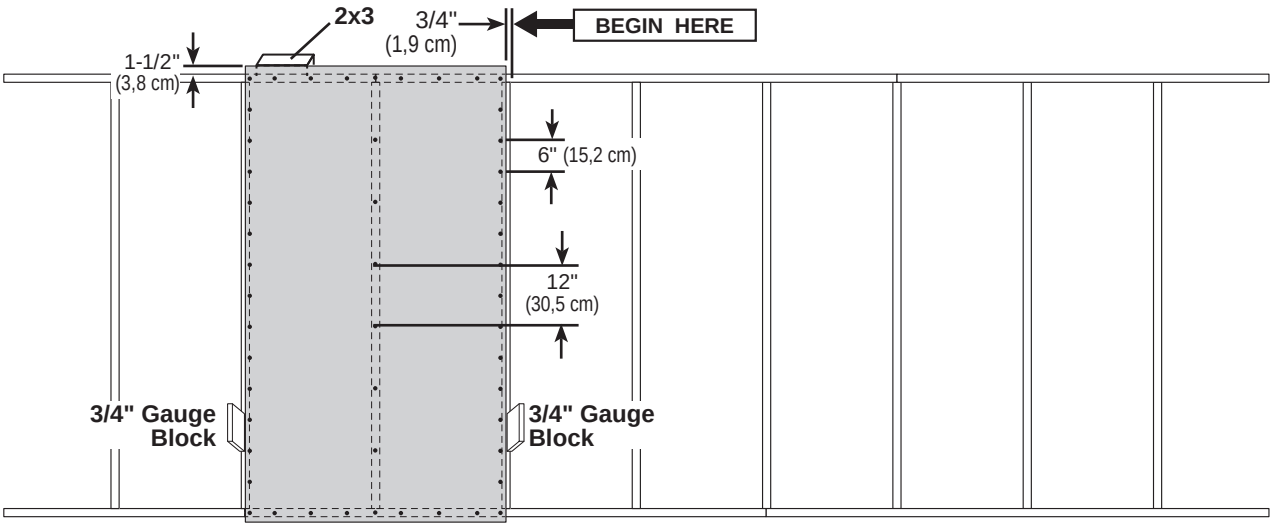

3 Install (4) **48" x 84"** panels flush to installed panels. Locate panels 1-1/2" from the top plate.

Secure with 2" nails spaced 6" apart on edges and 12" apart inside panel.

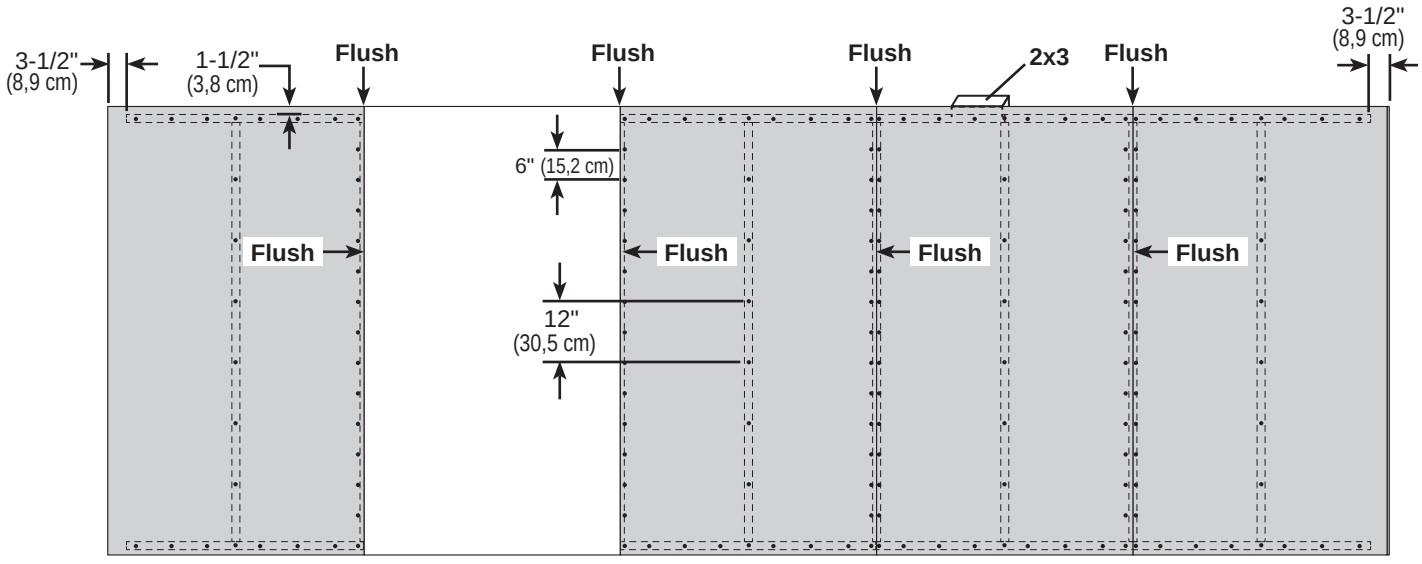

FINISH

Carefully flip the wall over. Repeat all steps to build the 2nd 20' eave wall.
Your 20' eave walls are now assembled.

24' EAVE WALL 06

PARTS REQUIRED:

x112 3" (7,6 cm)

x2 YFA
2 x 4 x 68-1/2" (5,1 x 10,2 x 174 cm)

x11 AI
2 x 4 x 78-1/2" (5,1 x 10,2 x 199,4 cm)

x1 TJ
2 x 4 x 92-5/8" (5,1 x 10,2 x 235 cm)

x2 TP
2 x 4 x 96" (5,1 x 10,2 x 243,8 cm)

x1 HVC
2 x 4 x 44-3/8" (5,1 x 10,2 x 112,7 cm)

x2 SP
2 x 4 x 48" (5,1 x 10,2 x 121,9 cm)

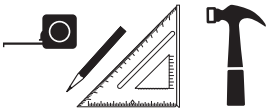

Build two identical walls.

BEGIN

1 Orient parts on edge on floor. Measure and mark from end of boards.
Secure with (2) 3" nails at each connection and (4) 3" nails at seams.

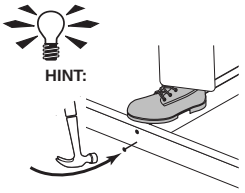

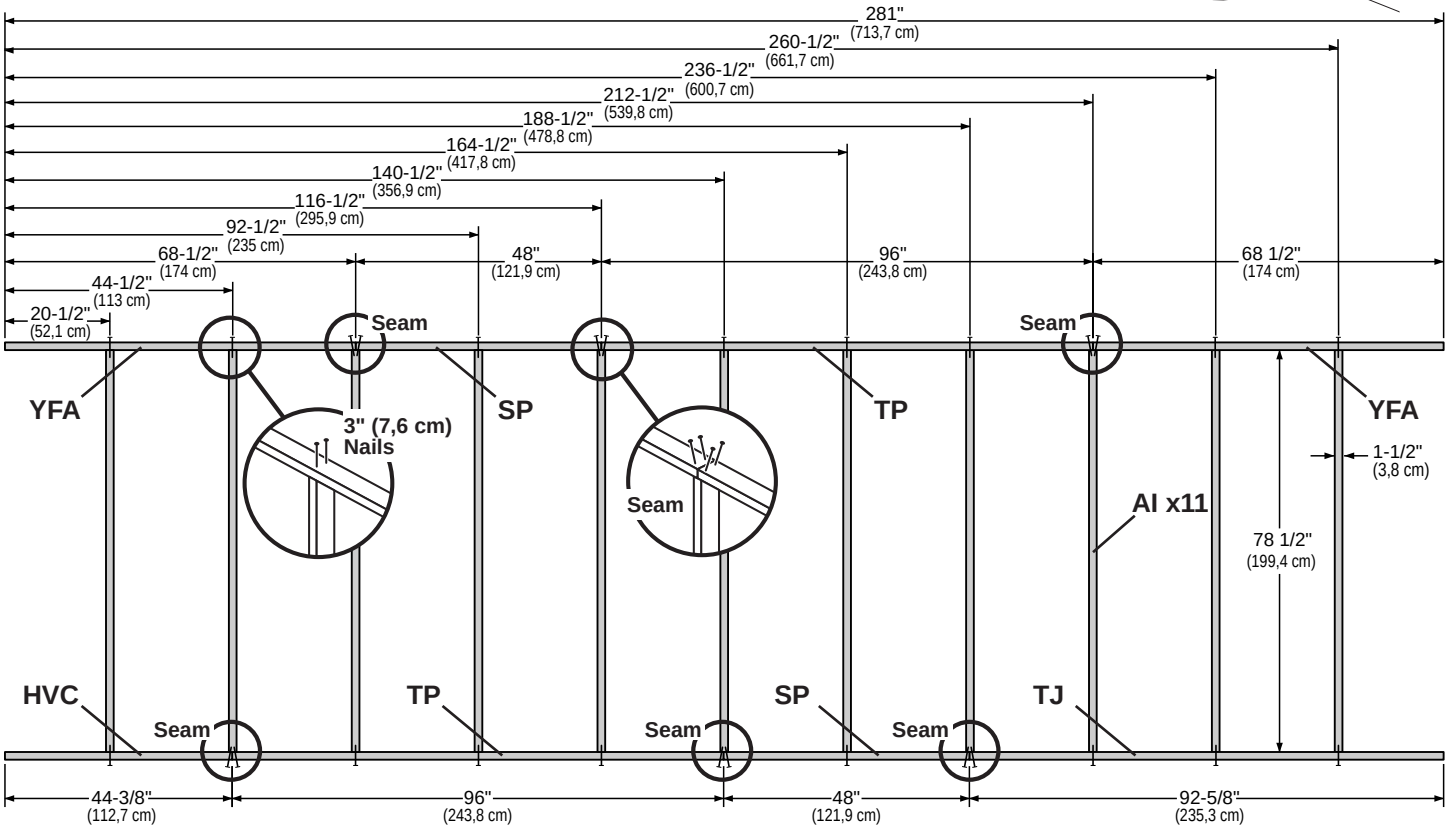

24' EAVE WALL 06

PARTS REQUIRED:

x6 — 48 x 84" (121,9 x 213,4 cm)

x540 — 2" (5,1 cm)

2 Install (1) **48" x 84"** panel 1-1/2" from the top plate. Use a 2x3 spacer for consistent measurement.

Secure panel with 2" nails spaced 6" apart on edges and 12" inside panel.

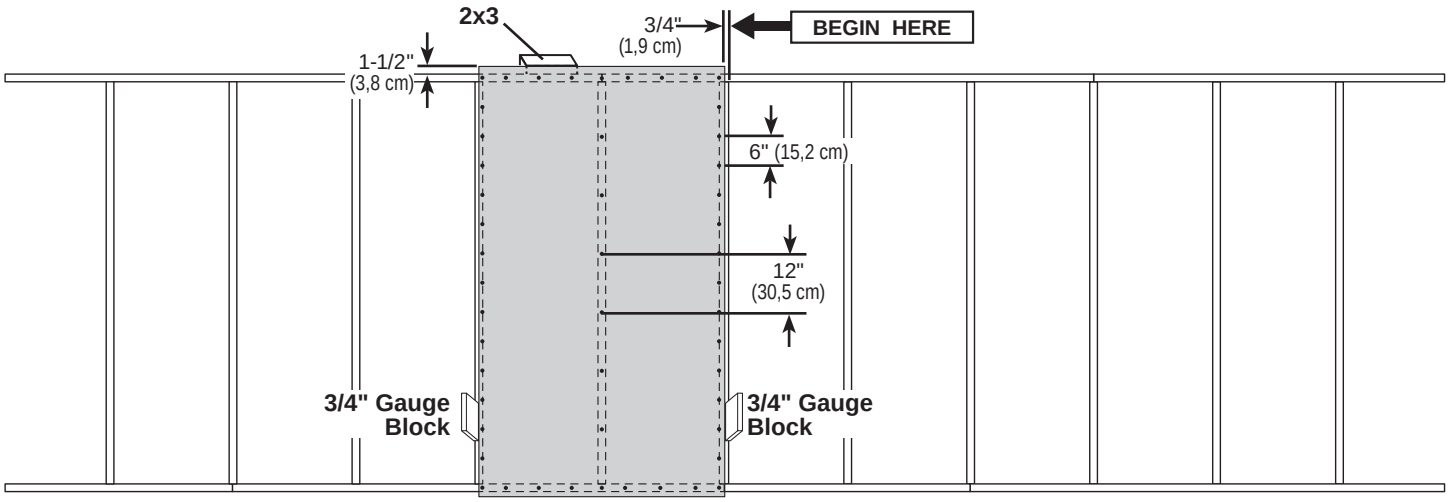

3 Install (5) **48" x 84"** panels flush to installed panels. Locate panels 1-1/2" from the top plate.

Secure with 2" nails spaced 6" apart on edges and 12" apart inside panel.

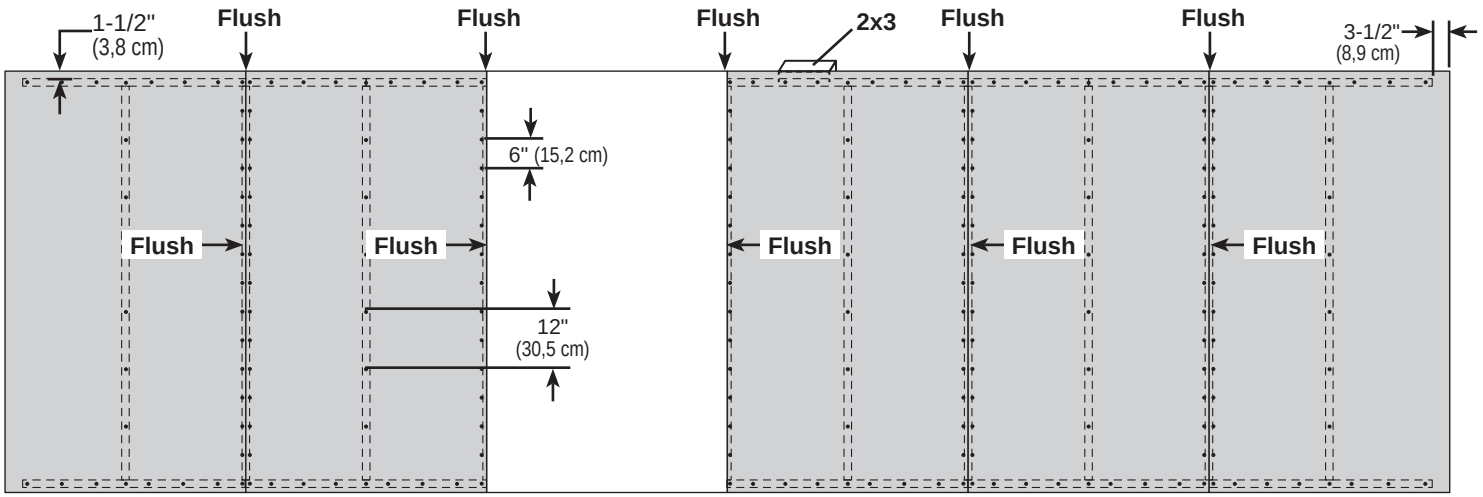

FINISH

Carefully flip the wall over. Repeat all steps to build the 2nd 24' eave wall.

Your 24' eave walls are now assembled.

12' GABLE WALL 02 INSTALLATION

PARTS REQUIRED:

x1 **OO**
69" (175,3 cm) Door Stiffener



x12 3" (7,6 cm)

x2 3" (7,6 cm)

x27 2" (5,1 cm)

BEGIN

1 Center 12' gable wall on the 144" (365,8 cm) floor dimension. 1-1/2" (3,8 cm) overlap is to the top.

Use **OO** as a temporary brace. Secure with (2) 3" screws.

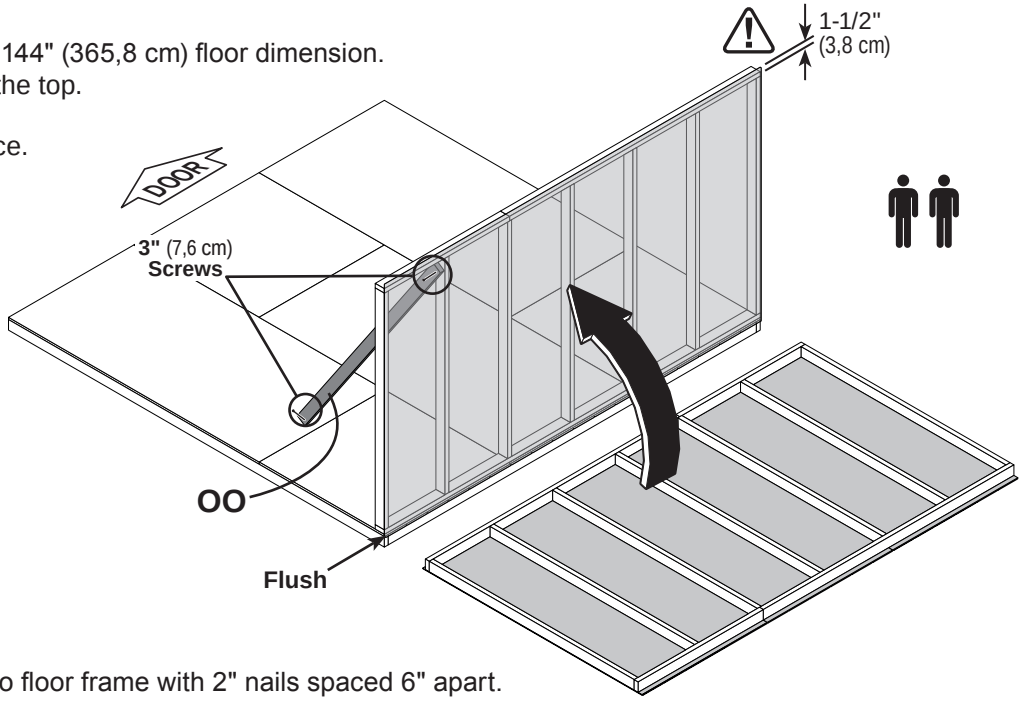

2 Secure lower edge of panel to floor frame with 2" nails spaced 6" apart. Angle nails into floor frame **(Fig. A)**.

Secure wall bottom plates to floor with 3" nails **(Fig. A)**.

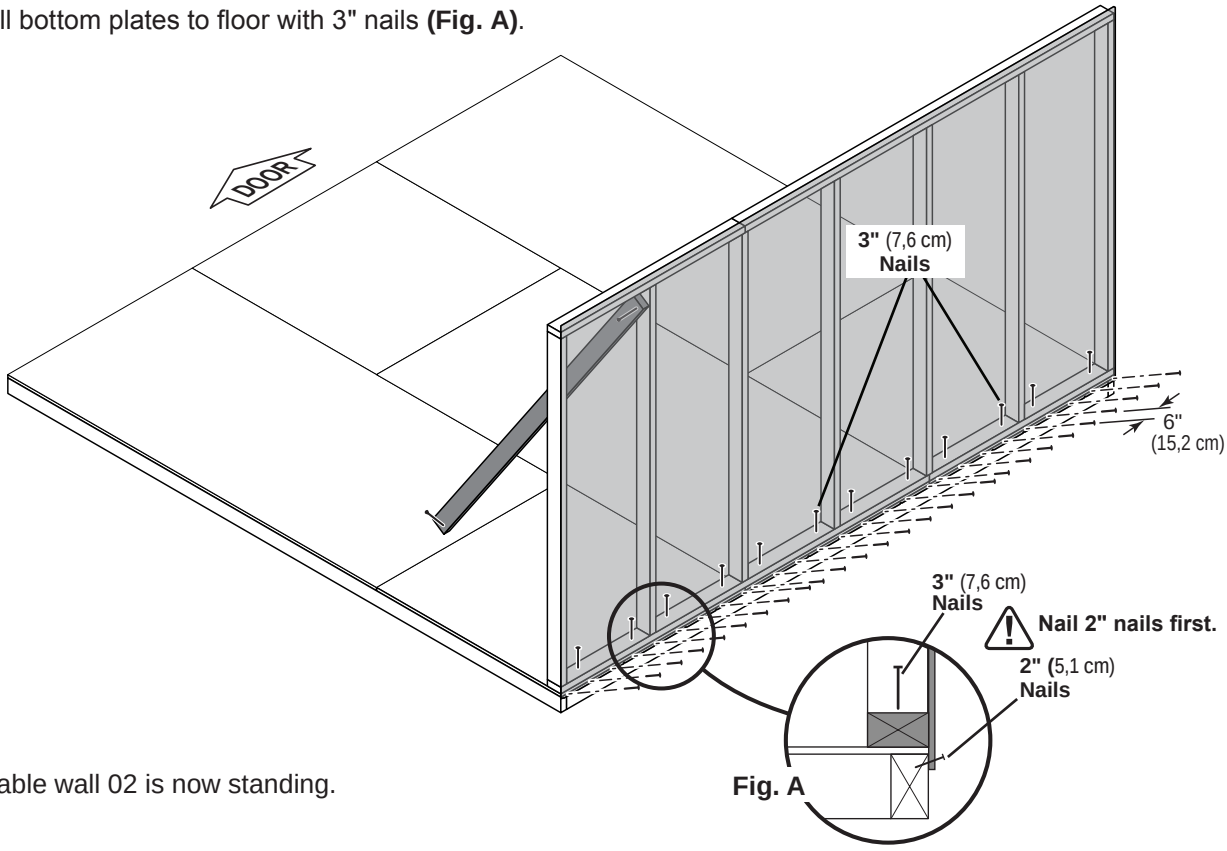

Fig. A

FINISH

Your 12' gable wall 02 is now standing.

1st 12' EAVE WALL INSTALLATION

PARTS REQUIRED

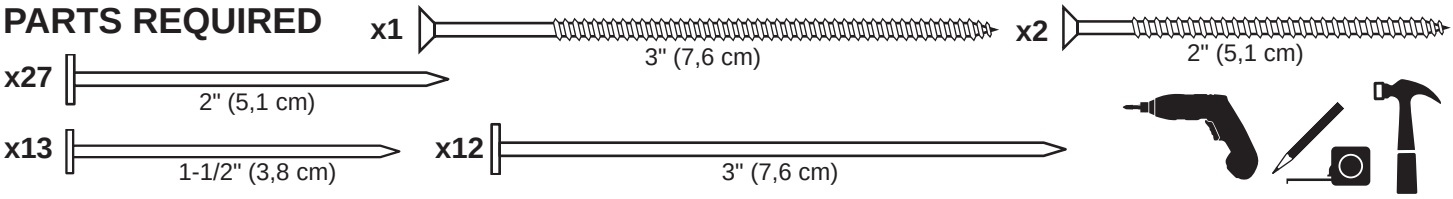

BEGIN

1 Place 12' eave wall centered on floor.
1-1/2" (3,8 cm) overlap is to the top.

Secure wall with (1) 2" screw into 12' gable wall bottom plate **(Fig. A)** and top plate **(Fig. B)**.

Secure wall to bottom plate first.

⚠ **ENSURE PANEL CORNERS ARE FLUSH.**

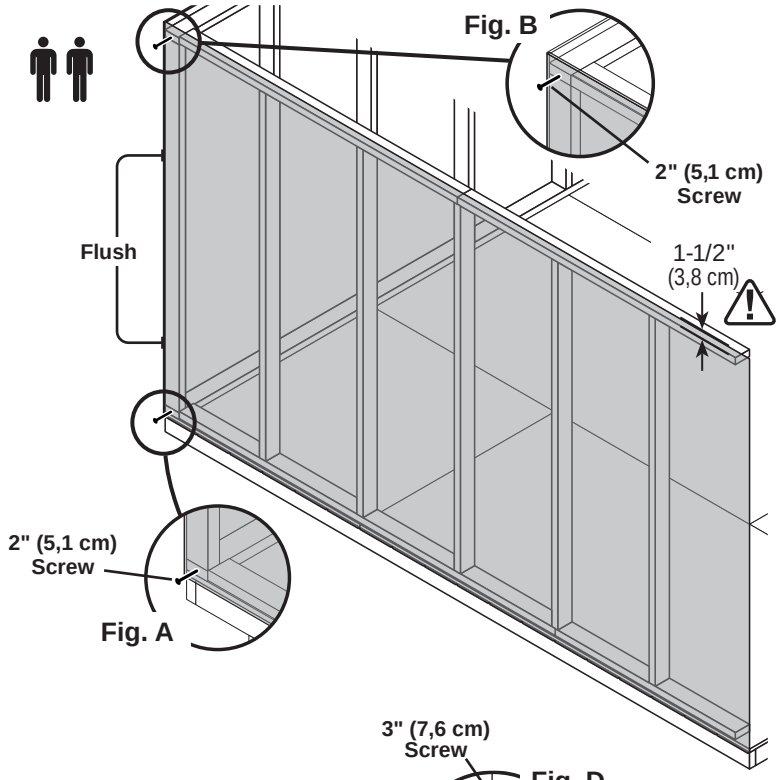

2 Nail lower edge of panels to floor with 2" nails spaced 6" apart.
Angle nails into floor frame **(Fig. C)**.

Nail panel to 12' wall stud with 1-1/2" nails spaced 6" apart.

3 Secure wall top plate with (1) 3" screw angled at the corner at an angle as shown **(Fig. D)**.

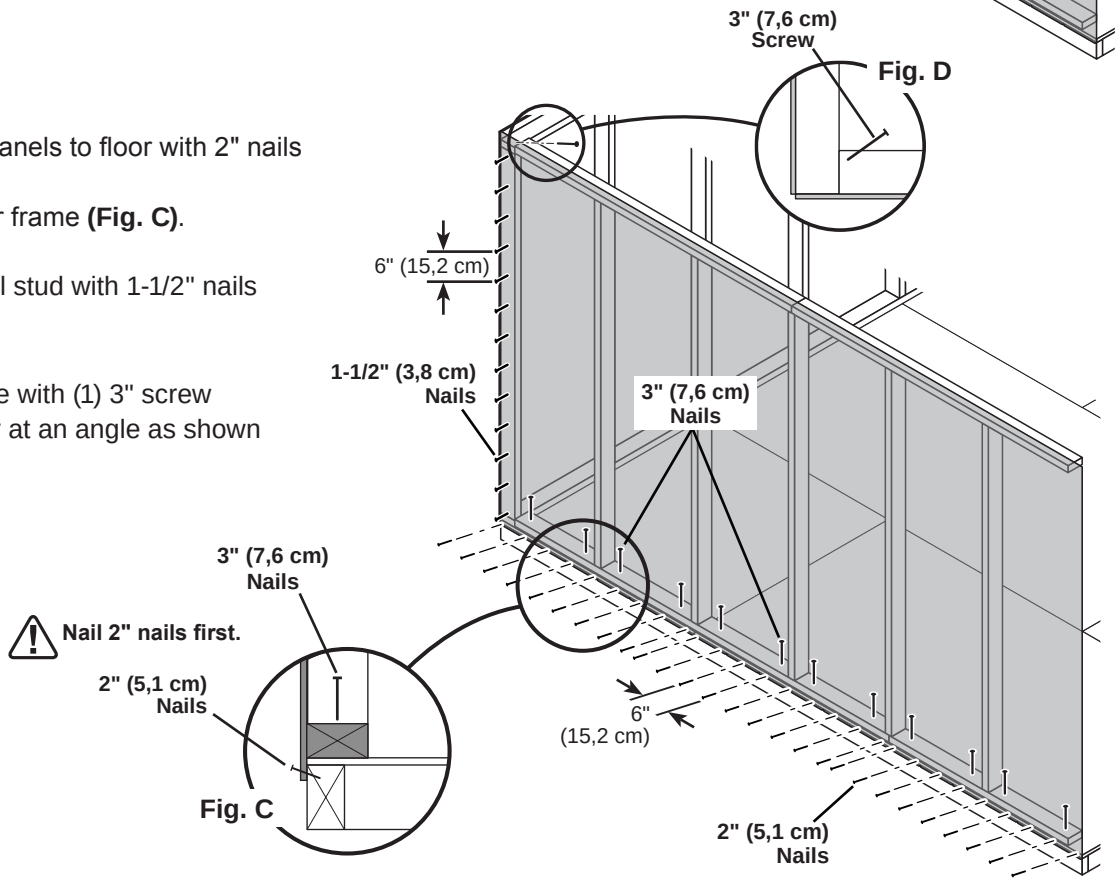

FINISH

Your 1st 12' eave wall is now installed.

2nd 12' EAVE WALL INSTALLATION

PARTS REQUIRED:

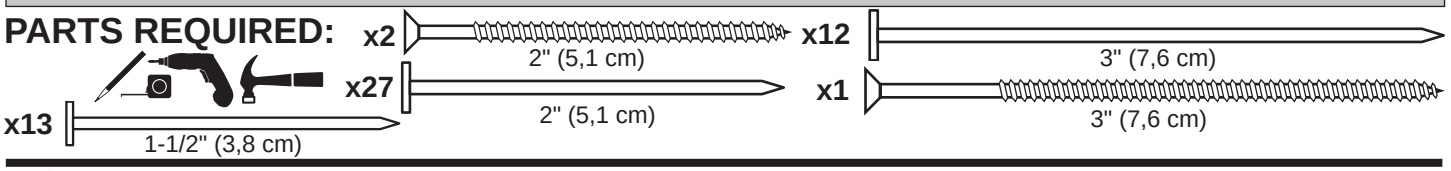

BEGIN

1 Place 2nd 12' eave wall centered on floor 1-1/2" (3,8 cm) overlap is to the top.

ENSURE PANEL CORNERS ARE FLUSH.

2 Secure wall with (1) 2" screw through eave wall panel into 12' gable wall bottom and top plates **(Fig. B, Fig. A)**. ***Secure wall to bottom plate first.***

3 Nail lower edge of wall panels to floor frame with 2" nails spaced 6" apart. Angle nails into floor frame **(Fig. C)**.

Secure wall bottom plates to floor with 3" nails **(Fig. C)**.

4 Nail 12' eave wall panel to 12' gable wall stud with 1-1/2" nails spaced 6" apart.

5 Secure wall top plate with (1) 3" screw at the corner at an angle as shown **(Fig. D)**.

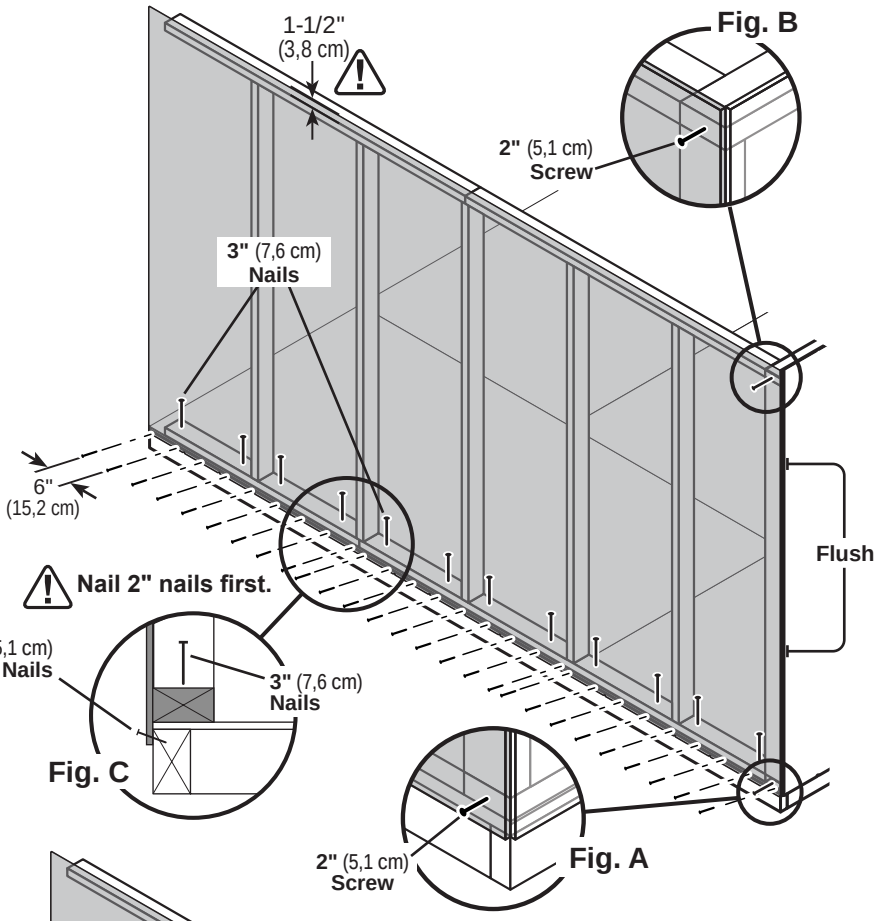

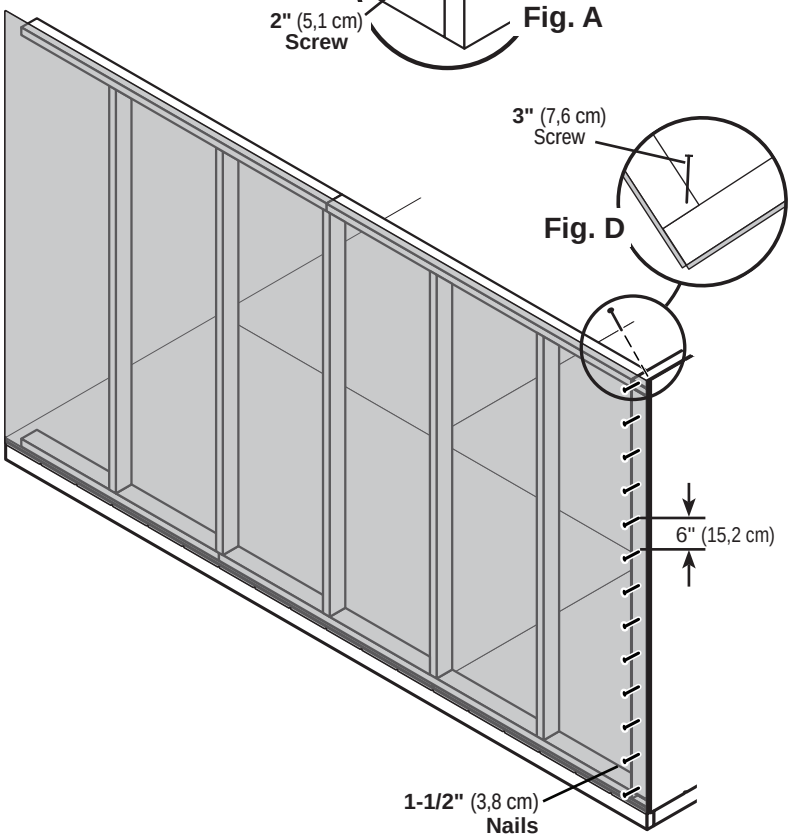

FINISH

Your 2nd 12' eave wall is now installed.

12' GABLE WALL WITH DOOR INSTALLATION

PARTS REQUIRED

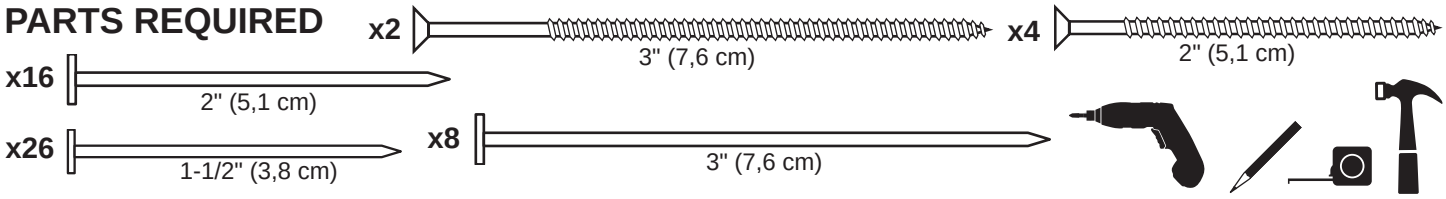

BEGIN

1 Place 12' gable wall on floor, centered between installed walls.

Secure wall with 2" screws into top and bottom plates **(Fig. A, Fig. B)**.

Secure wall to bottom plate first.

⚠ **ENSURE PANEL CORNERS ARE FLUSH.** ⚠

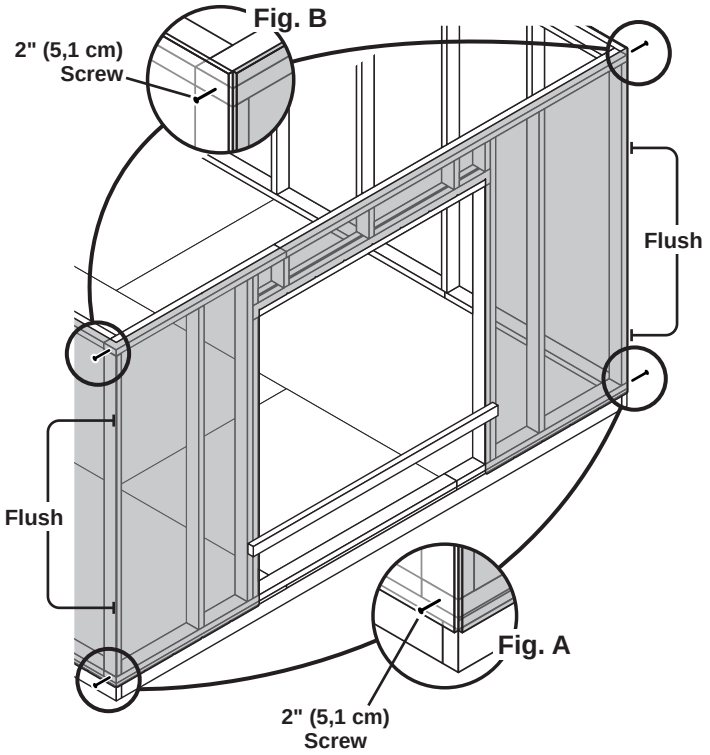

2 Nail lower edge of panels to floor with 2" nails spaced 6" apart. Angle nails into floor frame **(Fig. C)**.

Nail panels to 24' wall studs with 1-1/2" nails spaced 6" apart.

3 Secure wall top plates with 3" screws at each corner at an angle **(Fig. D)**.

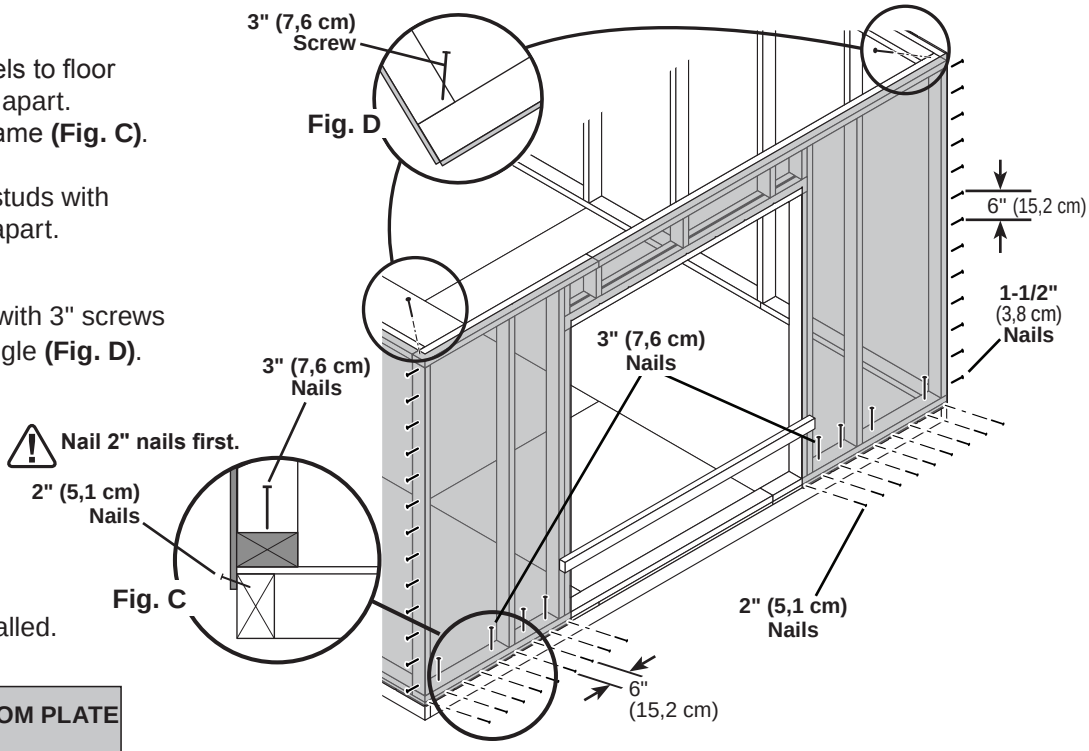

FINISH

Your walls are now installed.

CUT OUT AND REMOVE BOTTOM PLATE AT DOOR OPENING.
REMOVE TEMPORARY BRACING.

12' x 12' WALL DOUBLERS INSTALLATION

PARTS REQUIRED:

x2 SP
2 x 4 x 48" (5,1 x 10,2 x 121,9 cm)

x2 HVC
2 x 4 x 44-3/8" (5,1 x 10,2 x 112,7 cm)

x2 TJ
2 x 4 x 92-5/8" (5,1 x 10,2 x 235 cm)

x2 PT
2 x 4 x 96" (5,1 x 10,2 x 243,8 cm)

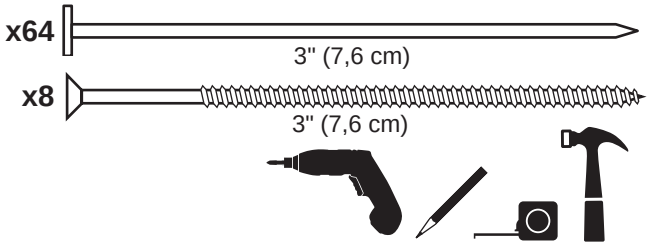

BEGIN

1 Orient parts on top of wall frames. Measure and mark from end of boards. Secure from top with (2) 3" nails spaced every 24" **(Fig. A).**

2 Secure from bottom with (2) 3" screws at each corner **(Fig. B).**

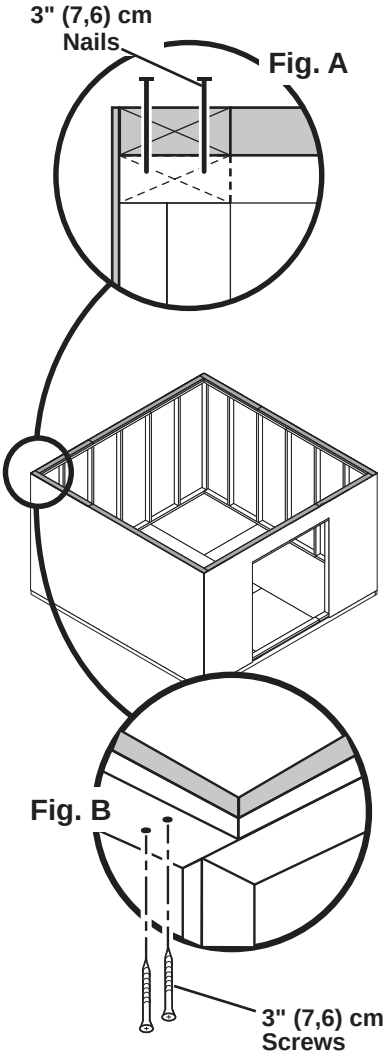

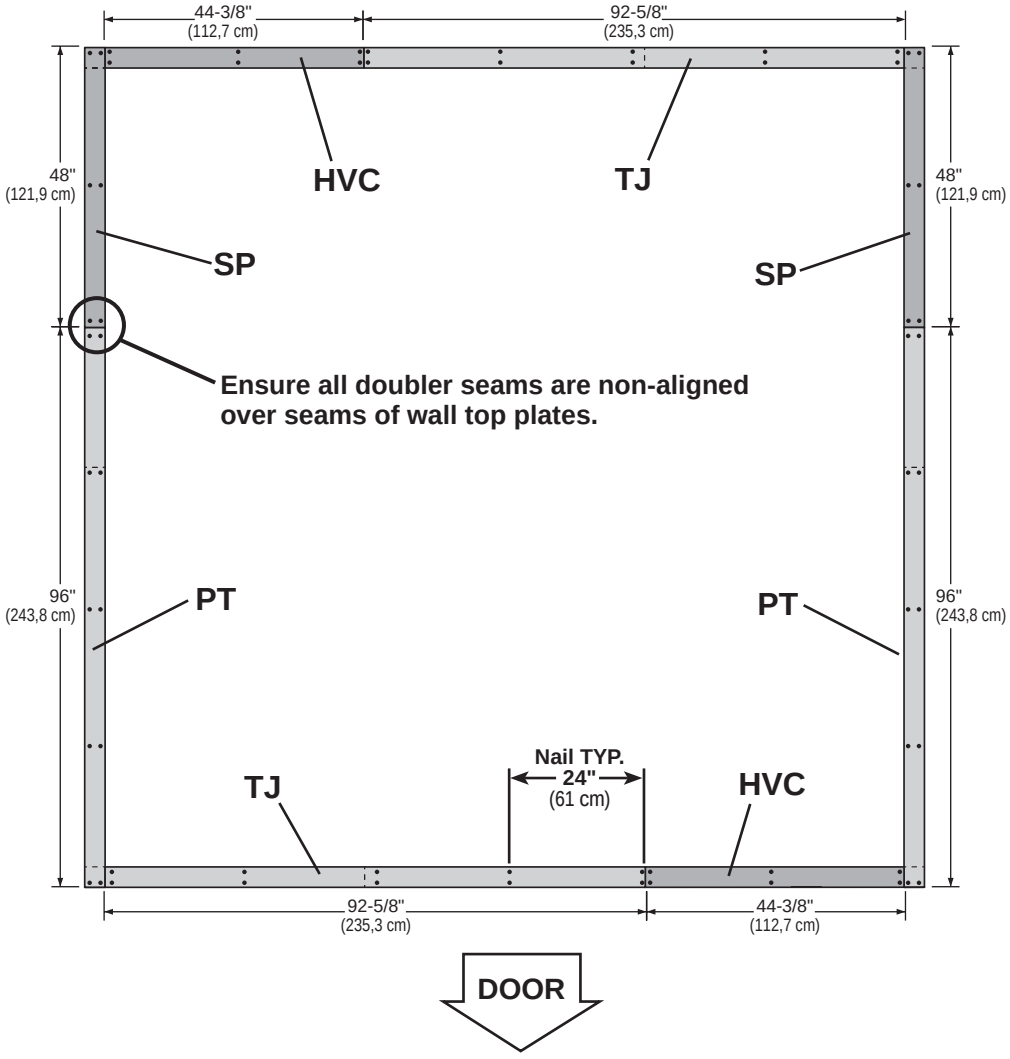

FINISH

Your wall doublers are now installed.

CONTINUE TO PAGE 52 TO RESUME CONSTRUCTION OF 12' X 12' SHED.

12' GABLE WALL 02 INSTALLATION

PARTS REQUIRED:

x1 **OO**
69" (175,3 cm) Door Stiffener



x12 3" (7,6 cm)

x2 3" (7,6 cm)

x27 2" (5,1 cm)

BEGIN

1 Center 12' wall on the 120" (304,8 cm) floor dimension. 1-1/2" (3,8 cm) overlap is to the top.

Use **OO** as a temporary brace. Secure with (2) 3" screws.

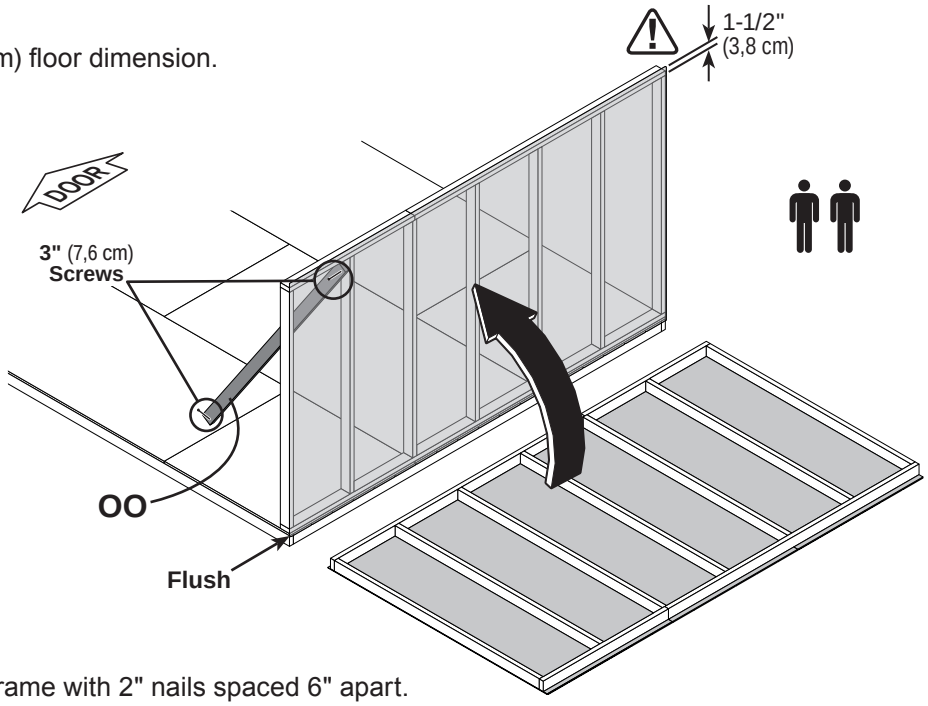

2 Secure lower edge of panel to floor frame with 2" nails spaced 6" apart. Angle nails into floor frame **(Fig. A)**.

Secure wall bottom plates to floor with 3" nails **(Fig. A)**.

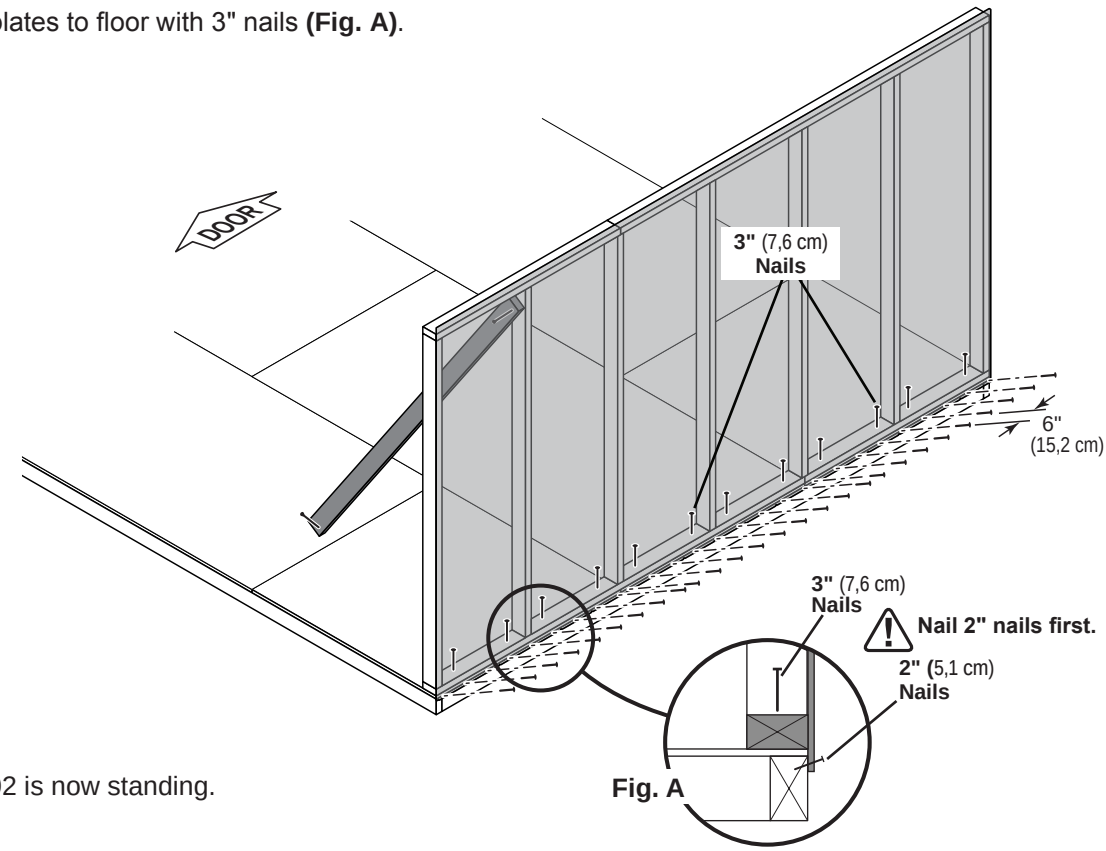

Fig. A

FINISH

Your 12' gable wall 02 is now standing.

1st 16' EAVE WALL INSTALLATION

PARTS REQUIRED

x3 — 3" (7,6 cm)

x2 — 2" (5,1 cm)

x1 **TJ** **Temporary Brace**
2 x 4 x 92-5/8" (5,1 x 10,2 x 235 cm)

x13 — 1-1/2" (3,8 cm)

x36 — 2" (5,1 cm)

x16 — 3" (7,6 cm)

BEGIN

1

Place 1st 16' eave wall centered on floor.
The 1-1/2" (3,8 cm) overlap is to the top.
Use **TJ** as a temporary brace as shown.
Secure **TJ** with (2) 3" screws.

Secure wall with (1) 2" screw into 12' wall bottom plate **(Fig. A)** and top plate **(Fig. B)**.

Secure wall to bottom plate first.

⚠ **ENSURE PANEL CORNERS ARE FLUSH.**

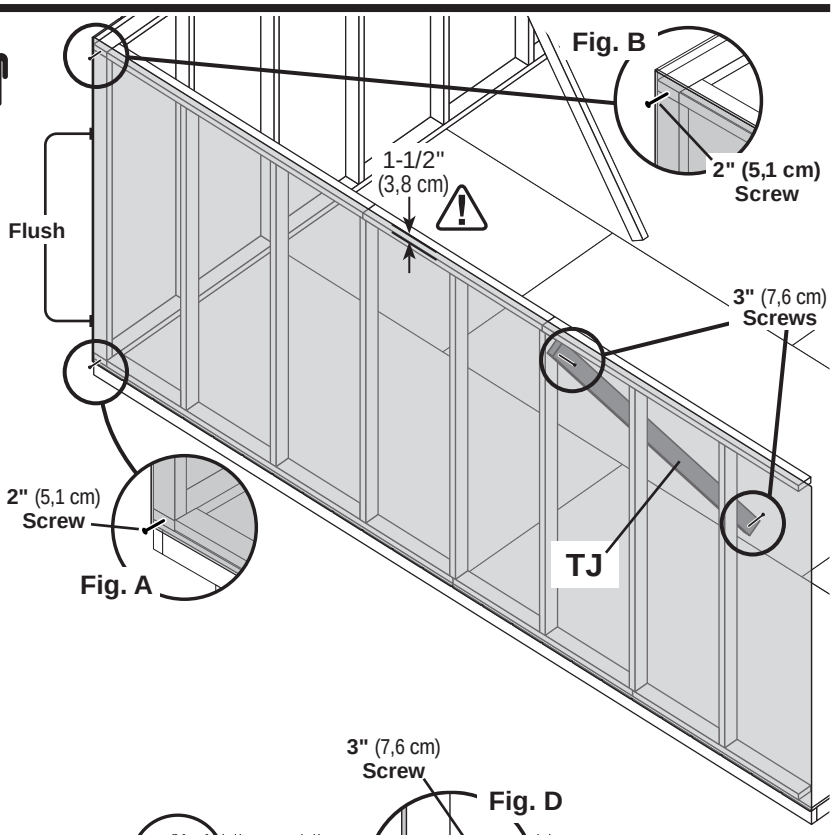

2

Nail lower edge of panels to floor with 2" nails spaced 6" apart. Angle nails into floor frame **(Fig. C)**.

Nail panel to 12' wall stud with 1-1/2" nails spaced 6" apart.

3

Secure wall top plate with (1) 3" screw at the corner at an angle as shown **(Fig. D)**.

⚠ **Nail 2" nails first.**

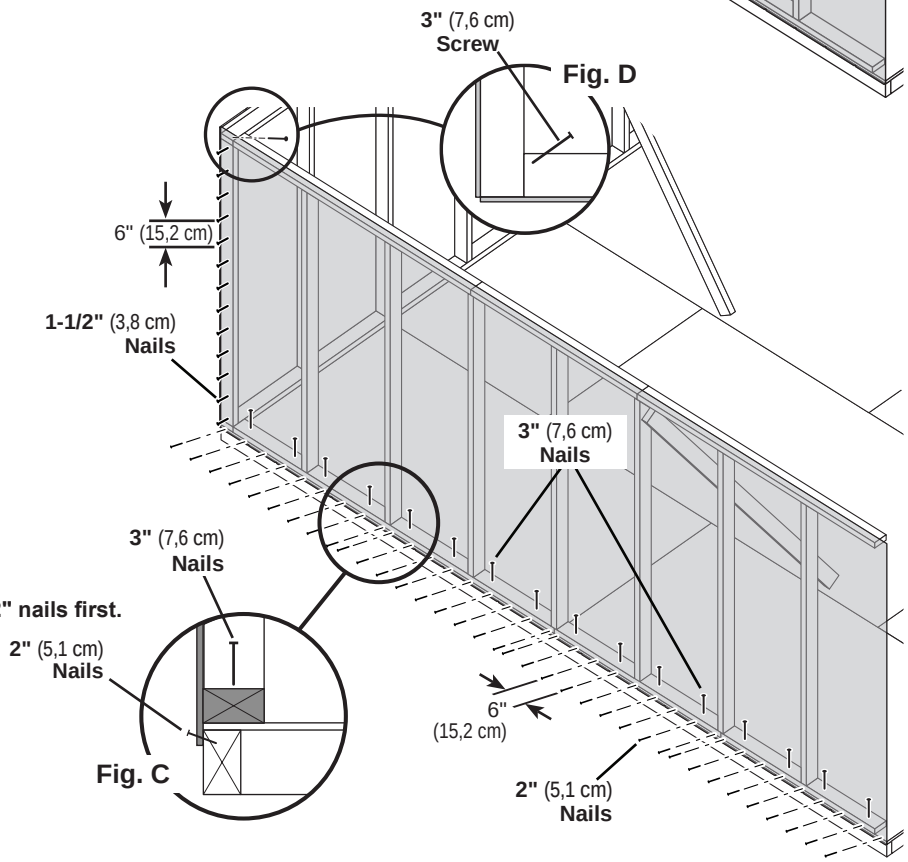

FINISH

Your 1st 16' eave wall is now installed.

2nd 16' EAVE WALL INSTALLATION

PARTS REQUIRED:

x16 — 3" (7,6 cm)

x2 — 2" (5,1 cm)

x2 — 3" (7,6 cm)

x1 — **TJ** — **Temporary Brace** — 2 x 4 x 92-5/8" (5,1 x 10,2 x 235 cm)

x36 — 2" (5,1 cm)

BEGIN

1

Place 2nd 16' wall centered on floor.
The 1-1/2" (3,8 cm) overlap is to the top.

Use **TJ** as a temporary brace as shown.
Secure **TJ** with (2) 3" screws.

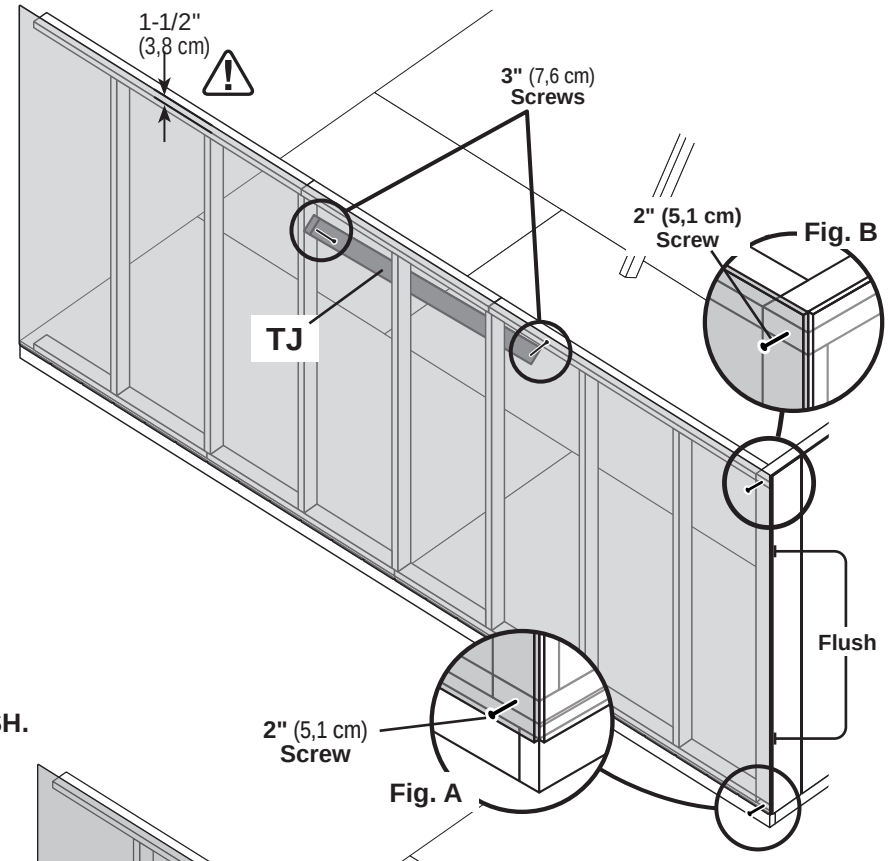

2

Secure wall with (1) 2" screw through gable wall panel into 12' wall bottom and top plates **(Fig. A, Fig. B)**.

Secure wall to bottom plate first.

ENSURE PANEL CORNERS ARE FLUSH.

3

Nail lower edge of wall panels to floor frame with 2" nails spaced 6" apart. Angle nails into floor frame **(Fig. C)**.

Secure wall bottom plates to floor with 3" nails **(Fig. C)**.

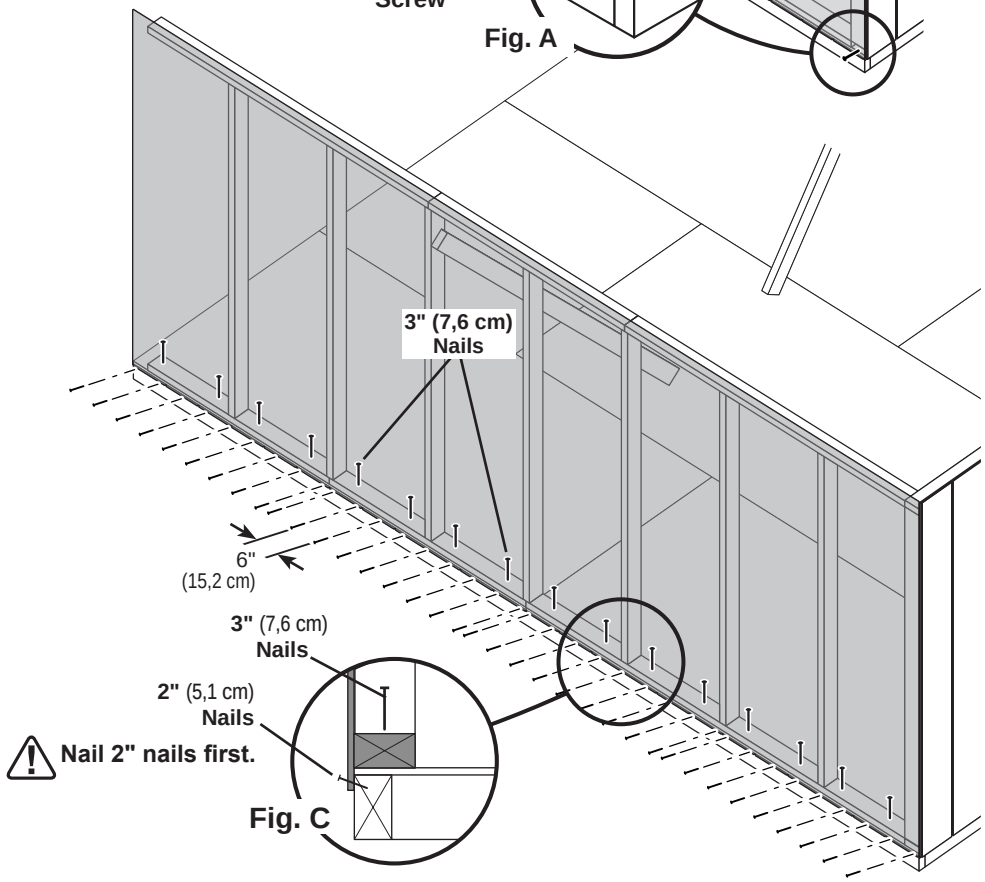

2nd 16' EAVE WALL INSTALLATION

PARTS REQUIRED:

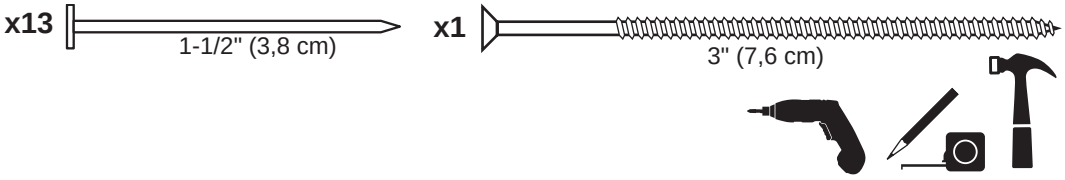

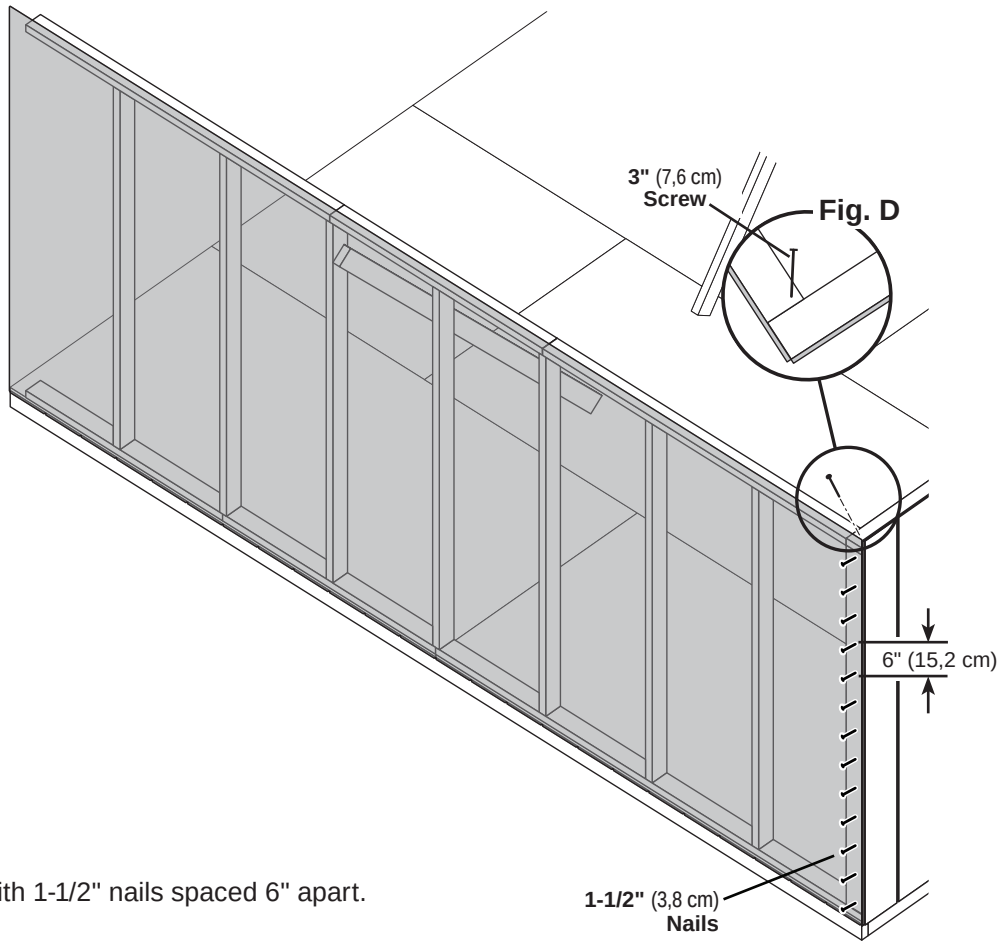

4

Nail 16' wall panel to 12' wall stud with 1-1/2" nails spaced 6" apart.

5

Secure gable wall top plate with (1) 3" screw at the corner at an angle, as shown **(Fig. D)**.

FINISH

Your 2nd 16' wall is now installed.

12' GABLE WALL WITH DOOR INSTALLATION

PARTS REQUIRED

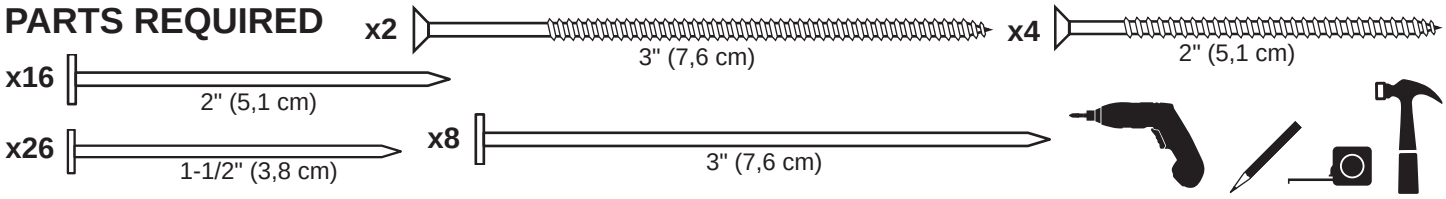

BEGIN

1 Place 12' gable wall on floor, centered between installed walls.

Secure wall with 2" screws into top and bottom plates **(Fig. A, Fig. B)**.

Secure wall to bottom plate first.

⚠ ENSURE PANEL CORNERS ARE FLUSH. ⚠

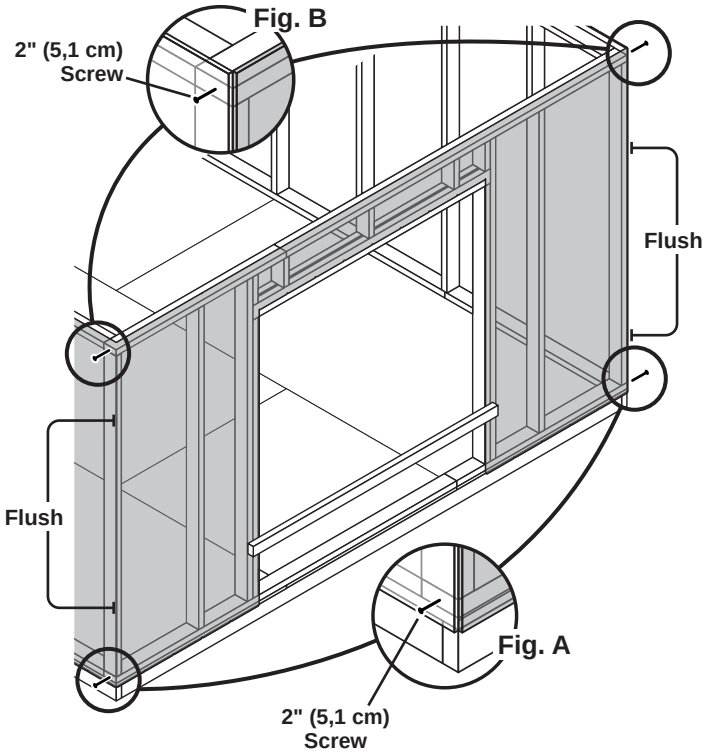

2 Nail lower edge of panels to floor with 2" nails spaced 6" apart. Angle nails into floor frame **(Fig. C)**.

Nail panels to 24' wall studs with 1-1/2" nails spaced 6" apart.

3 Secure wall top plates with 3" screws at each corner at an angle **(Fig. D)**.

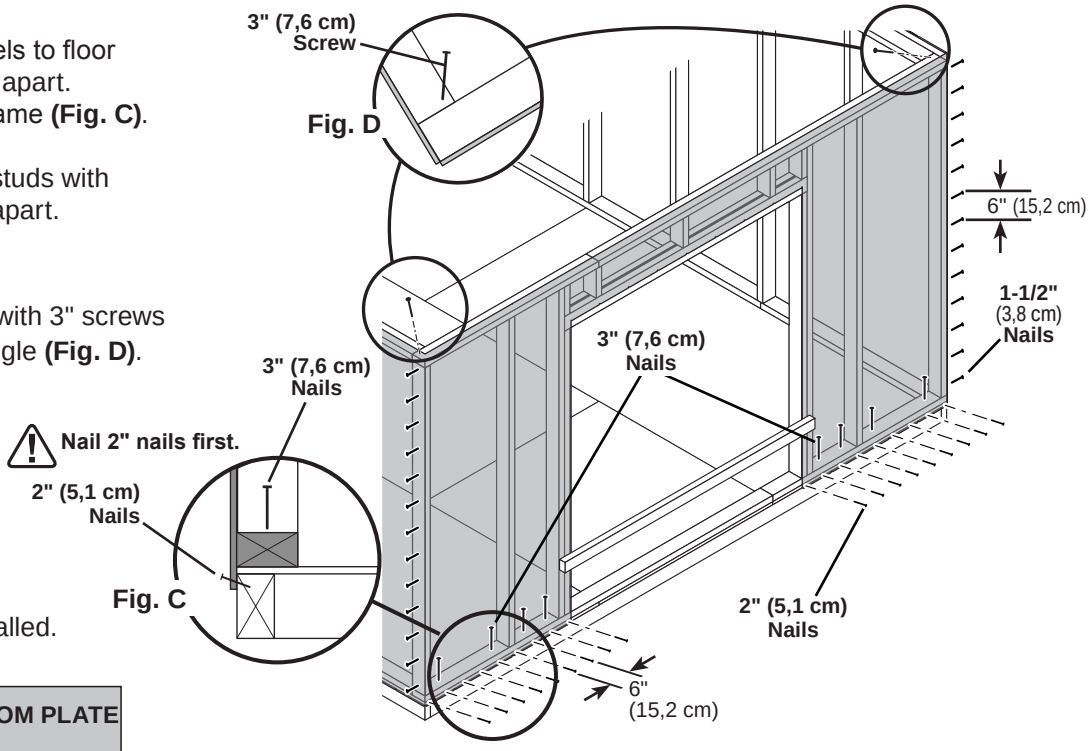

FINISH

Your walls are now installed.

CUT OUT AND REMOVE BOTTOM PLATE AT DOOR OPENING.
REMOVE TEMPORARY BRACING.

12' x 16' WALL DOUBLERS INSTALLATION

PARTS REQUIRED:

x4 NK
2 x 4 x 48" (5,1 x 10,2 x 121,9 cm)

x2 HVC
2 x 4 x 44-3/8" (5,1 x 10,2 x 112,7 cm)

x2 TJ
2 x 4 x 92-5/8" (5,1 x 10,2 x 235 cm)

x2 PT
2 x 4 x 96" (5,1 x 10,2 x 243,8 cm)

x76
3" (7,6 cm)

x8
3" (7,6 cm)

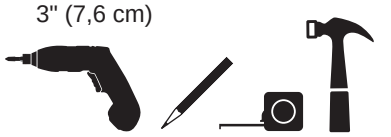

BEGIN

1 Orient parts on top of wall frames. Measure and mark from end of boards. Secure from top with (2) 3" nails spaced every 24" **(Fig. A).**

2 Secure from bottom with (2) 3" screws at each corner **(Fig. B).**

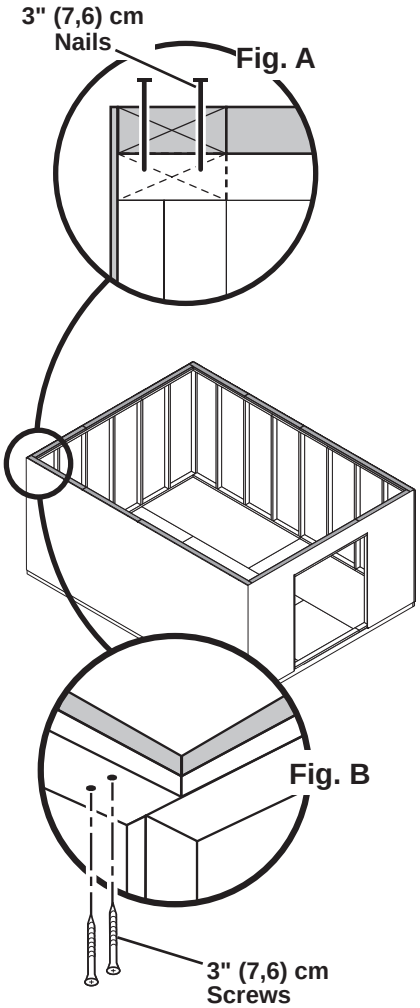

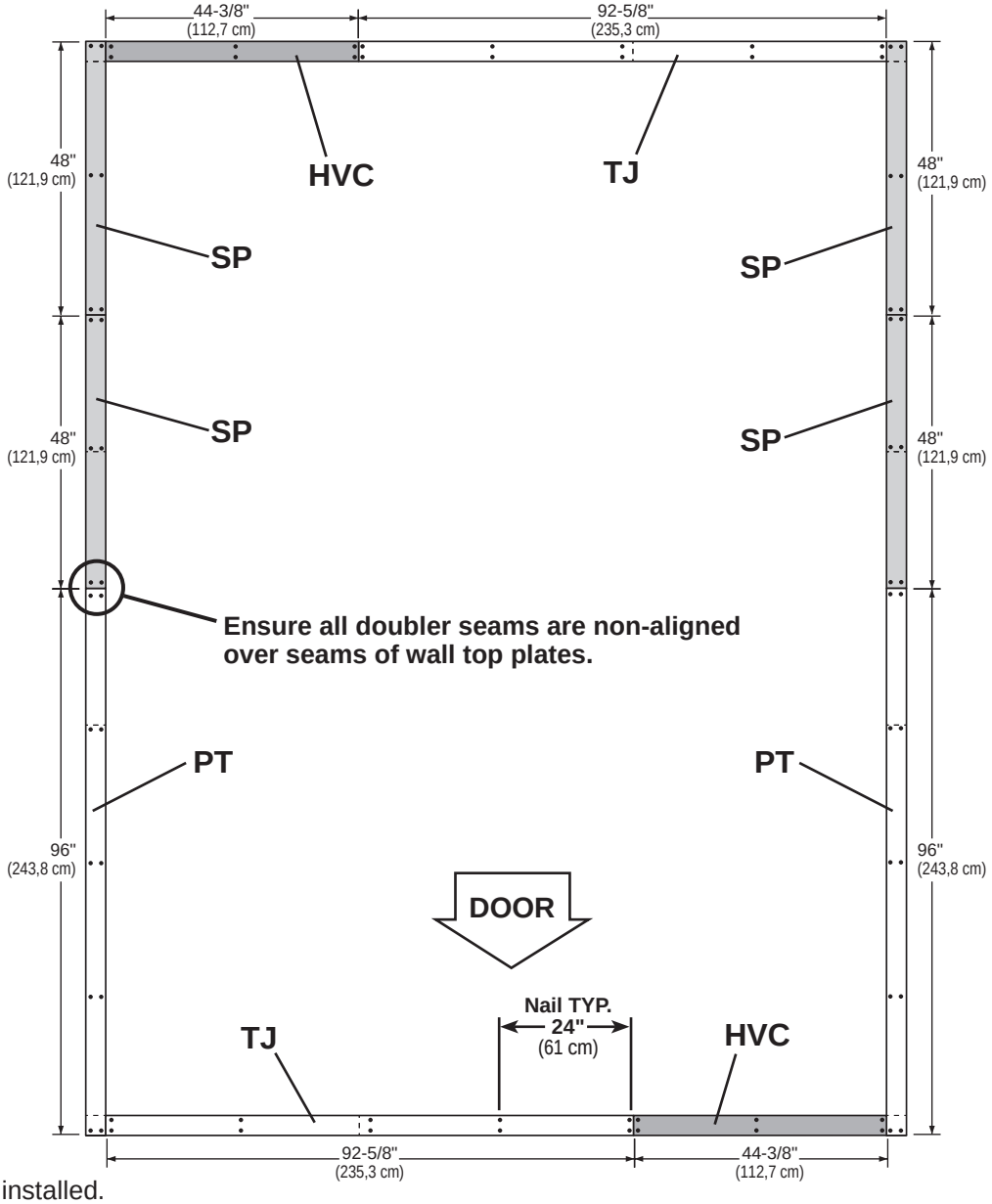

FINISH

Your wall doublers are now installed.

CONTINUE TO PAGE 52 TO RESUME CONSTRUCTION OF 12' X 16' SHED.

12' GABLE WALL 02 INSTALLATION

PARTS REQUIRED:

x1 **OO**
69" (175,3 cm) Door Stiffener



x12 3" (7,6 cm)

x2 3" (7,6 cm)

x27 2" (5,1 cm)

BEGIN

1 Center 12' wall on the 120" (304,8 cm) floor dimension. 1-1/2" (3,8 cm) overlap is to the top.

Use **OO** as a temporary brace. Secure with (2) 3" screws.

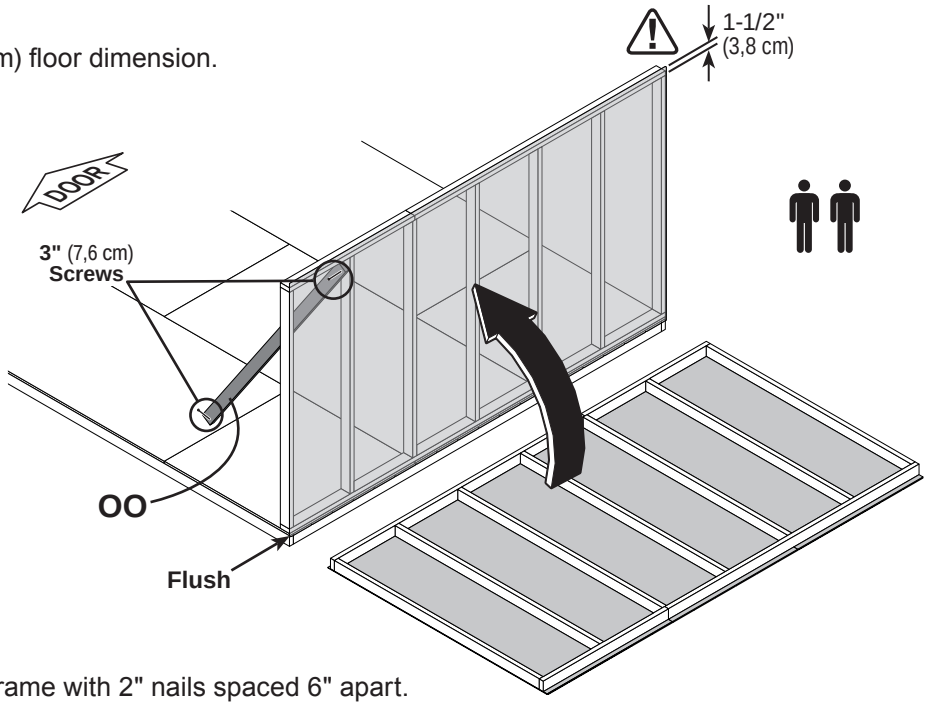

2 Secure lower edge of panel to floor frame with 2" nails spaced 6" apart. Angle nails into floor frame **(Fig. A)**.

Secure wall bottom plates to floor with 3" nails **(Fig. A)**.

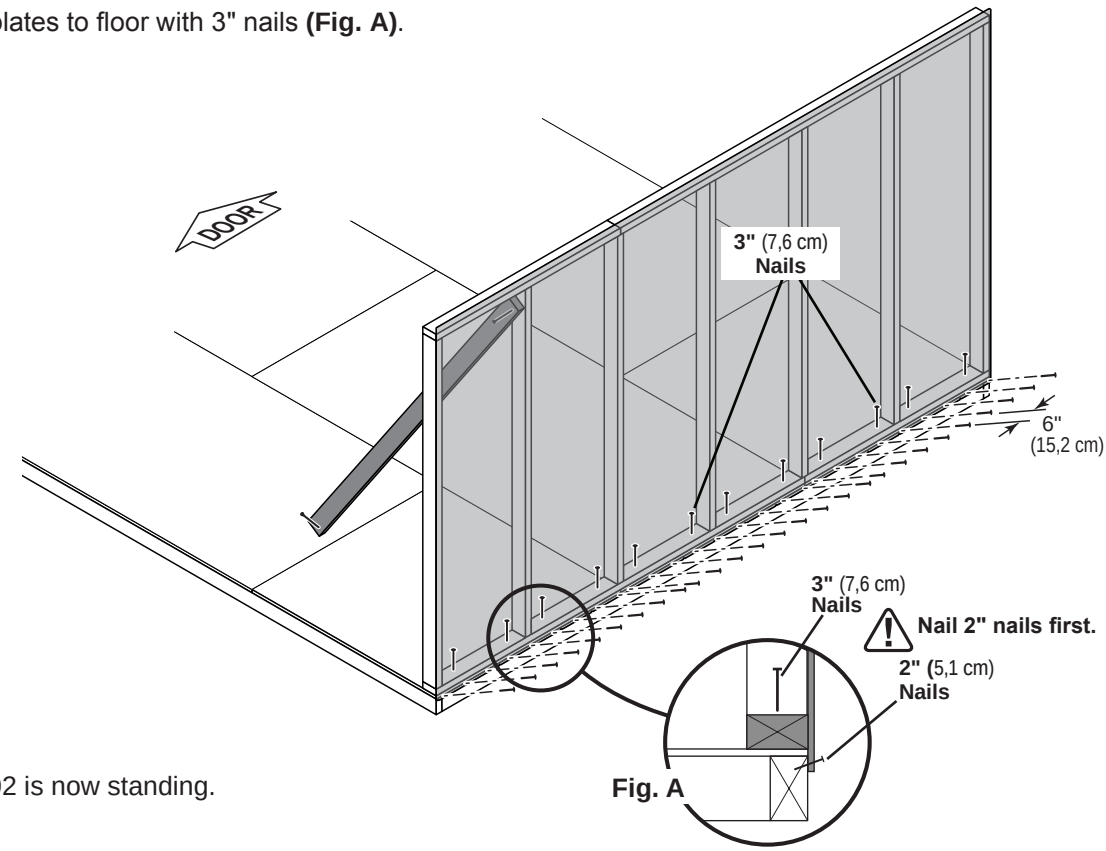

Fig. A

FINISH

Your 12' gable wall 02 is now standing.

1st 20' EAVE WALL 12 INSTALLATION

PARTS REQUIRED

x3 — 3" (7,6 cm)

x2 — 2" (5,1 cm)

x1 **TJ** **Temporary Brace**
2 x 4 x 92-5/8" (5,1 x 10,2 x 235 cm)

x13 — 1-1/2" (3,8 cm)

x45 — 2" (5,1 cm)

x20 — 3" (7,6 cm)

BEGIN

1

Place 1st 20' eave wall 12 centered on floor.

The 1-1/2" (3,8 cm) overlap is to the top.
Use **TJ** as a temporary brace as shown.
Secure **TJ** with (2) 3" screws.

Secure wall with (1) 2" screw into 12' wall bottom plate **(Fig. A)** and top plate **(Fig. B)**.

Secure wall to bottom plate first.

ENSURE PANEL CORNERS ARE FLUSH.

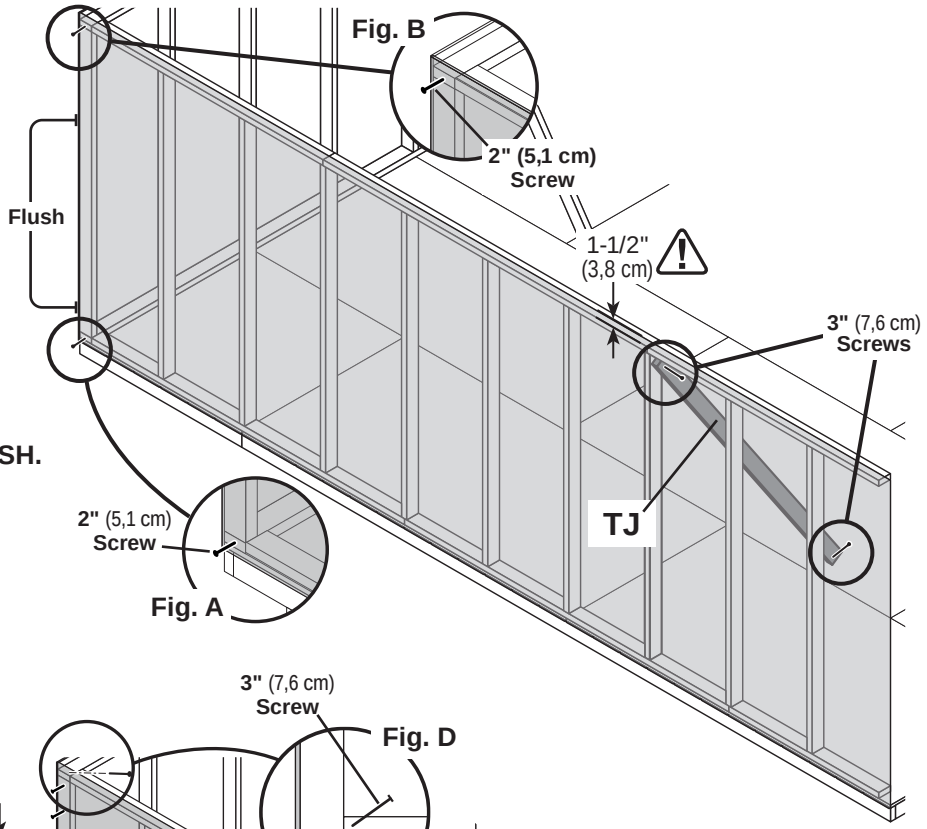

2

Nail lower edge of panels to floor with 2" nails spaced 6" apart. Angle nails into floor frame **(Fig. C)**.

Secure panel to 12' wall stud with 1-1/2" nails spaced 6" apart.

3

Secure wall top plate with (1) 3" screw at the corner at an angle as shown **(Fig. D)**.

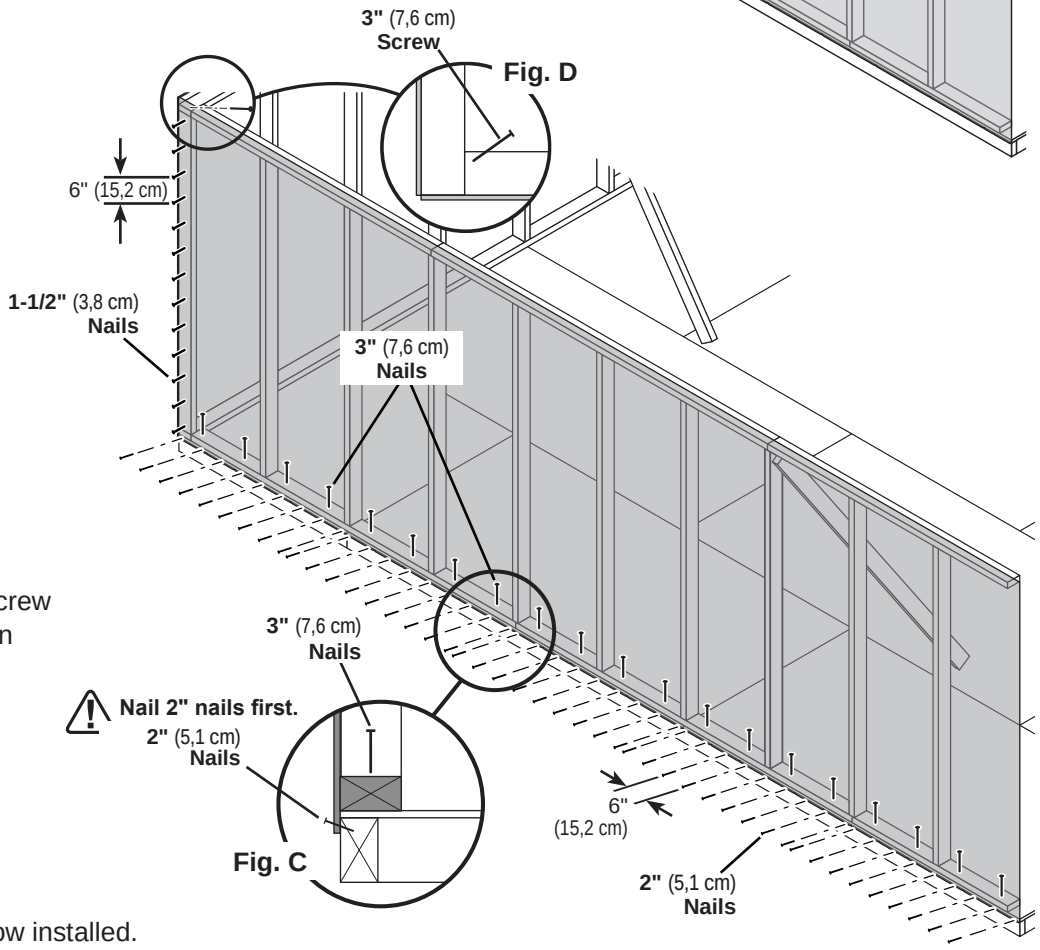

FINISH

Your 1st 20' eave wall is now installed.

2nd 20' EAVE WALL 12 INSTALLATION

PARTS REQUIRED:

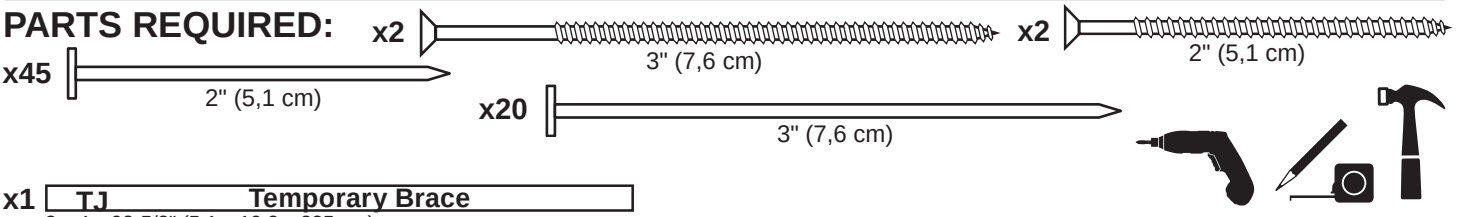

x1 **TJ** **Temporary Brace**
2 x 4 x 92-5/8" (5,1 x 10,2 x 235 cm)

BEGIN

1

Place 2nd 20' wall 12 centered on floor. 1-1/2" (3,8 cm) overlap is to the top.

Use **TJ** as a temporary brace as shown. Secure **TJ** with (2) 3" screws.

2

Secure wall with (1) 2" screw through gable wall panel into 12' wall bottom and top plates **(Fig. A, Fig. B)**.

Secure wall to bottom plate first.

⚠ **ENSURE PANEL CORNERS ARE FLUSH.**

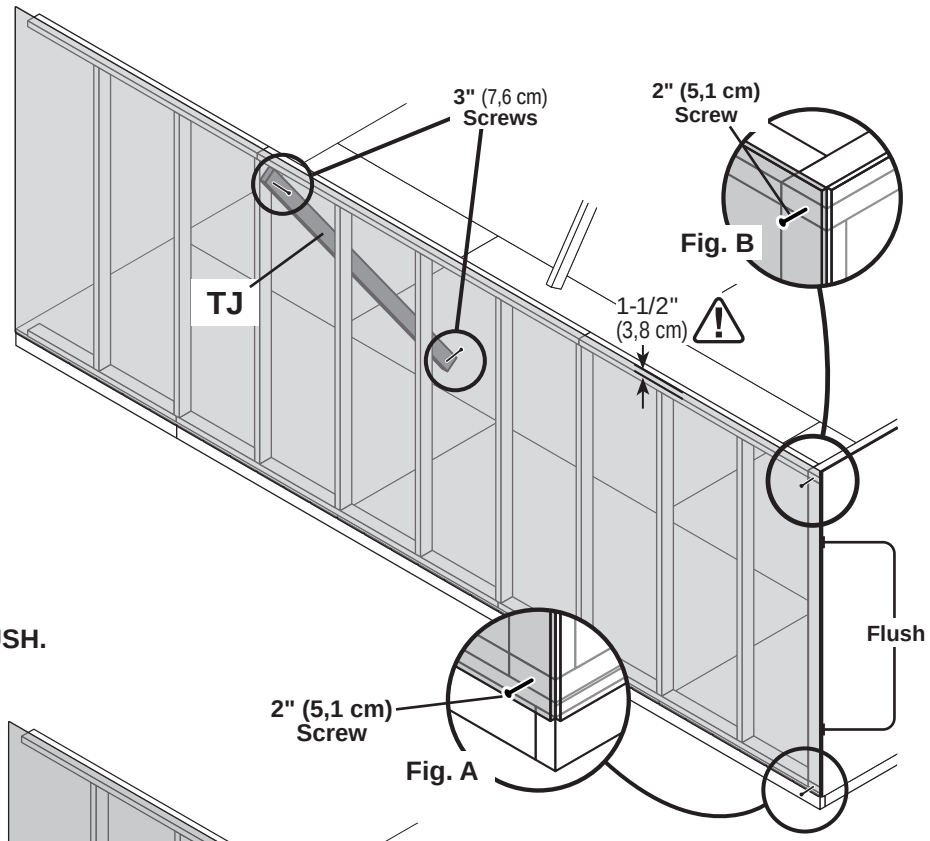

3

Nail lower edge of wall panels to floor frame with 2" nails spaced 6" apart. Angle nails into floor frame **(Fig. C)**.

Secure wall bottom plates to floor with 3" nails **(Fig. C)**.

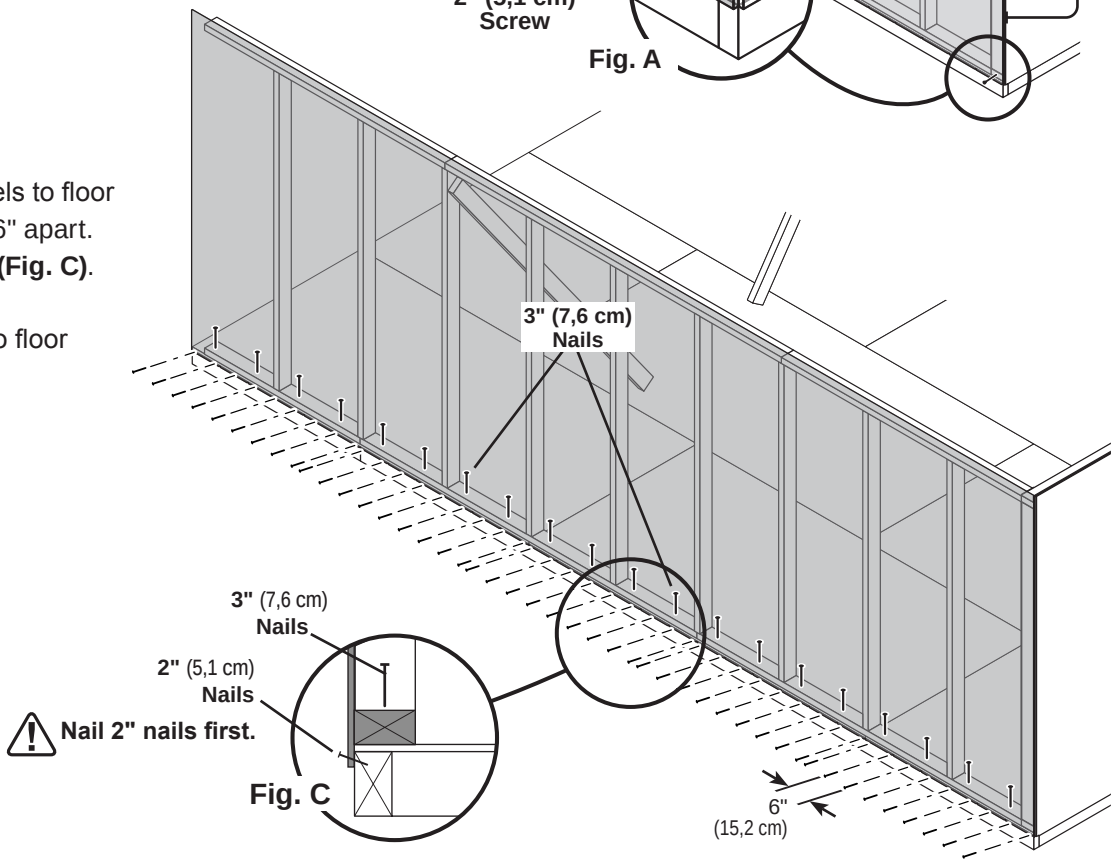

2nd 20' EAVE WALL 12 INSTALLATION

PARTS REQUIRED:

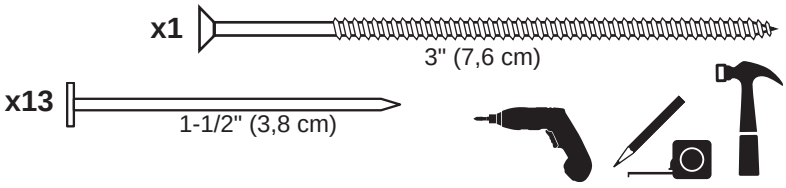

4

Secure 20' wall panel to 12' wall stud with 1-1/2" nails spaced 6" apart.

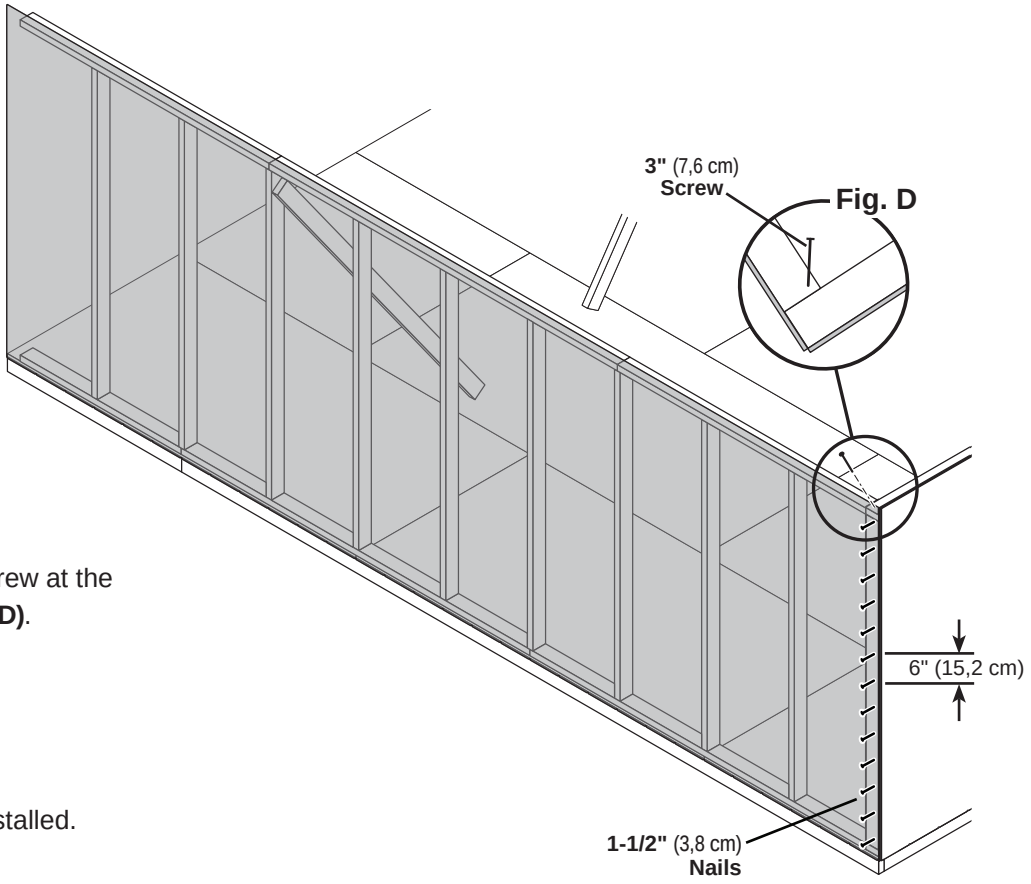

5

Secure wall top plate with (1) 3" screw at the corner at an angle as shown **(Fig. D)**.

FINISH

Your 2nd 20' wall 12 is now installed.

12' GABLE WALL WITH DOOR INSTALLATION

PARTS REQUIRED

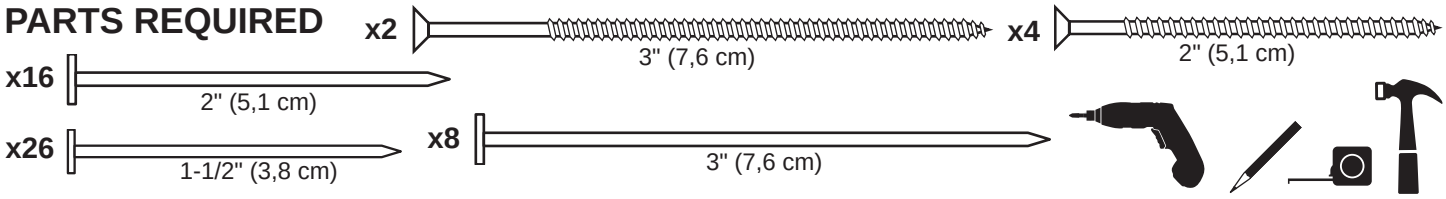

BEGIN

1 Place 12' gable wall on floor, centered between installed walls.

Secure wall with 2" screws into top and bottom plates **(Fig. A, Fig. B)**.

Secure wall to bottom plate first.

⚠ ENSURE PANEL CORNERS ARE FLUSH. ⚠

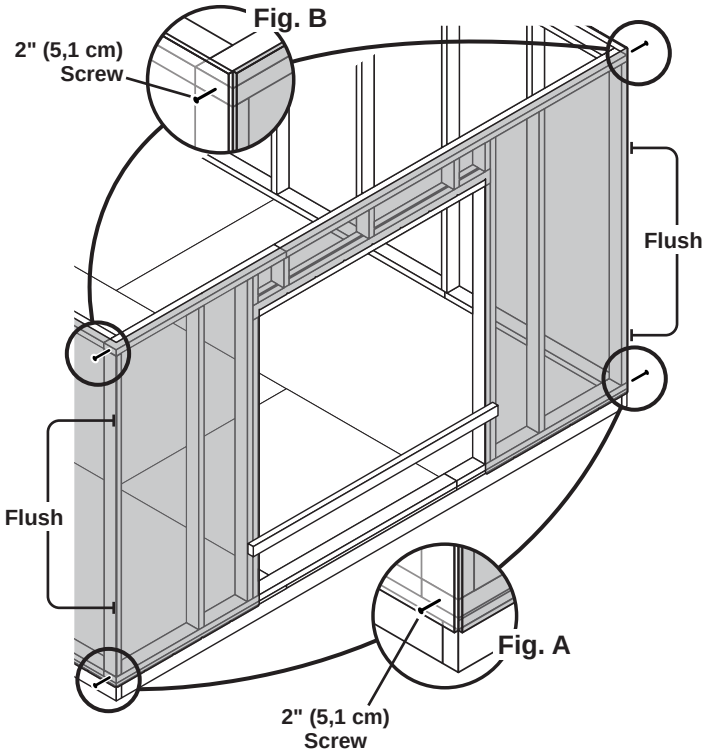

2 Nail lower edge of panels to floor with 2" nails spaced 6" apart. Angle nails into floor frame **(Fig. C)**.

Nail panels to 24' wall studs with 1-1/2" nails spaced 6" apart.

3 Secure wall top plates with 3" screws at each corner at an angle **(Fig. D)**.

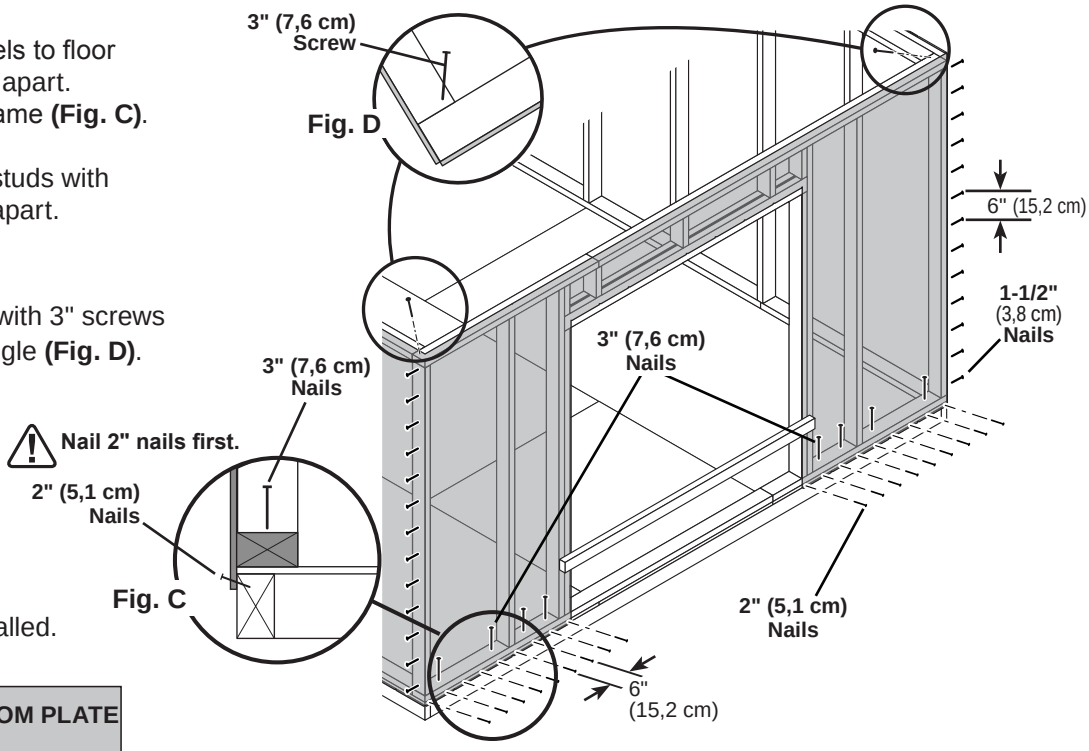

FINISH

Your walls are now installed.

CUT OUT AND REMOVE BOTTOM PLATE AT DOOR OPENING.
REMOVE TEMPORARY BRACING.

12' x 20' WALL DOUBLERS INSTALLATION

PARTS REQUIRED:

x2 SP — 2 x 4 x 48" (5,1 x 10,2 x 121,9 cm)

x2 HVC — 2 x 4 x 44-3/8" (5,1 x 10,2 x 112,7 cm)

x2 TJ — 2 x 4 x 92-5/8" (5,1 x 10,2 x 235 cm)

x4 PT — 2 x 4 x 96" (5,1 x 10,2 x 243,8 cm)

x84 3" (7,6 cm)

x8 3" (7,6 cm)

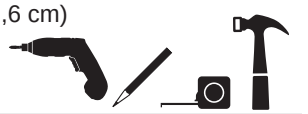

BEGIN

1

Orient parts on top of wall frames. Measure and mark from end of boards. Secure from top with (2) 3" nails spaced every 24" **(Fig. A).**

2

Secure from bottom with (2) 3" screws at each corner **(Fig. B).**

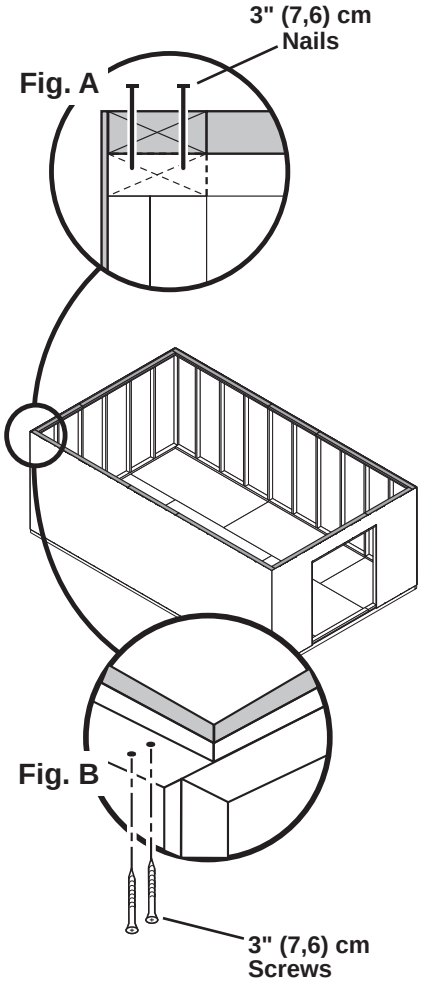

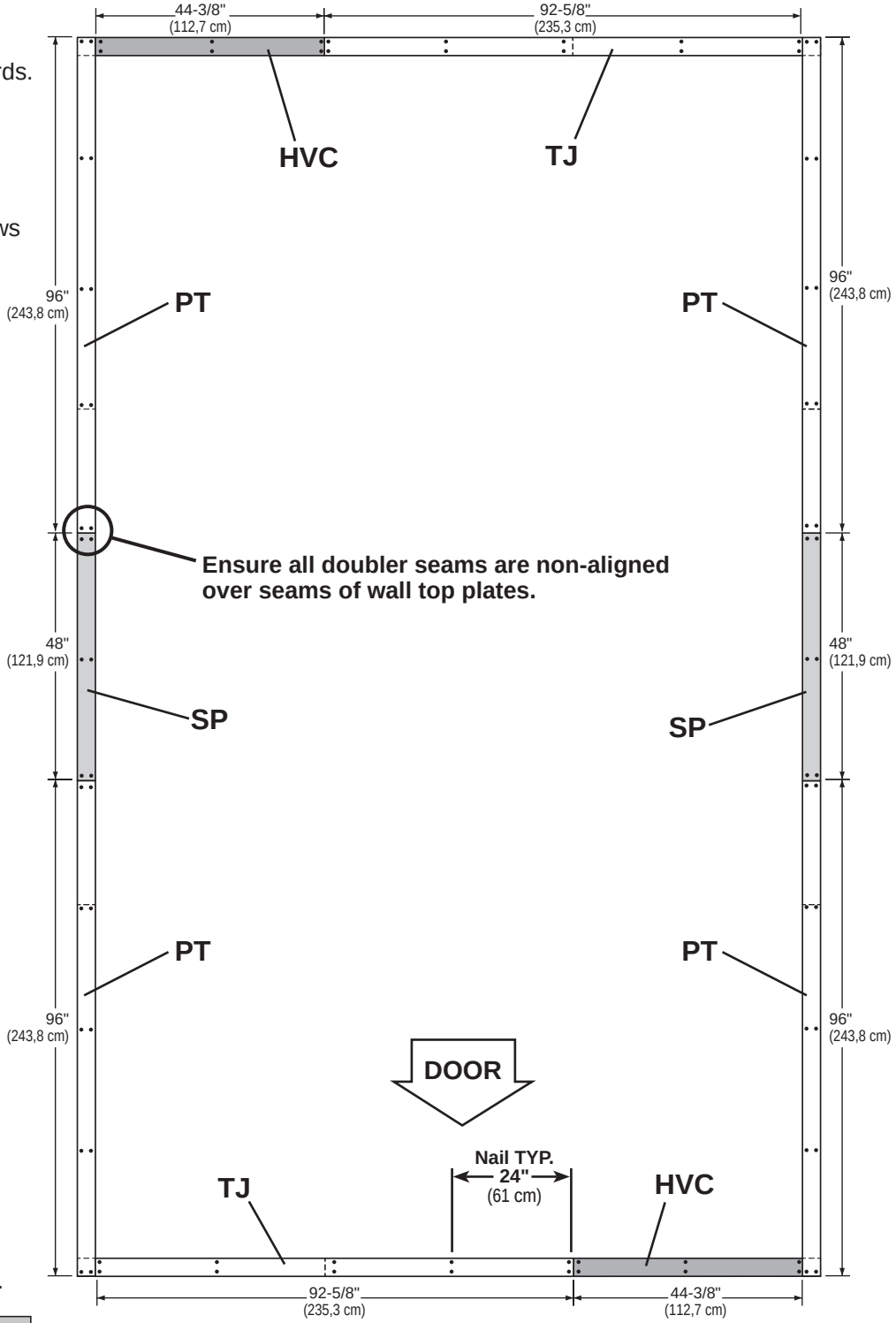

FINISH

Your wall doublers are now installed.

CONTINUE TO PAGE 52 TO RESUME CONSTRUCTION OF 12' X 20' SHED.

12' GABLE WALL 02 INSTALLATION

PARTS REQUIRED:

x1 **OO**
69" (175,3 cm) Door Stiffener



x12 3" (7,6 cm)

x2 3" (7,6 cm)

x27 2" (5,1 cm)

BEGIN

1 Center 12' wall on the 120" (304,8 cm) floor dimension. 1-1/2" (3,8 cm) overlap is to the top.

Use **OO** as a temporary brace. Secure with (2) 3" screws.

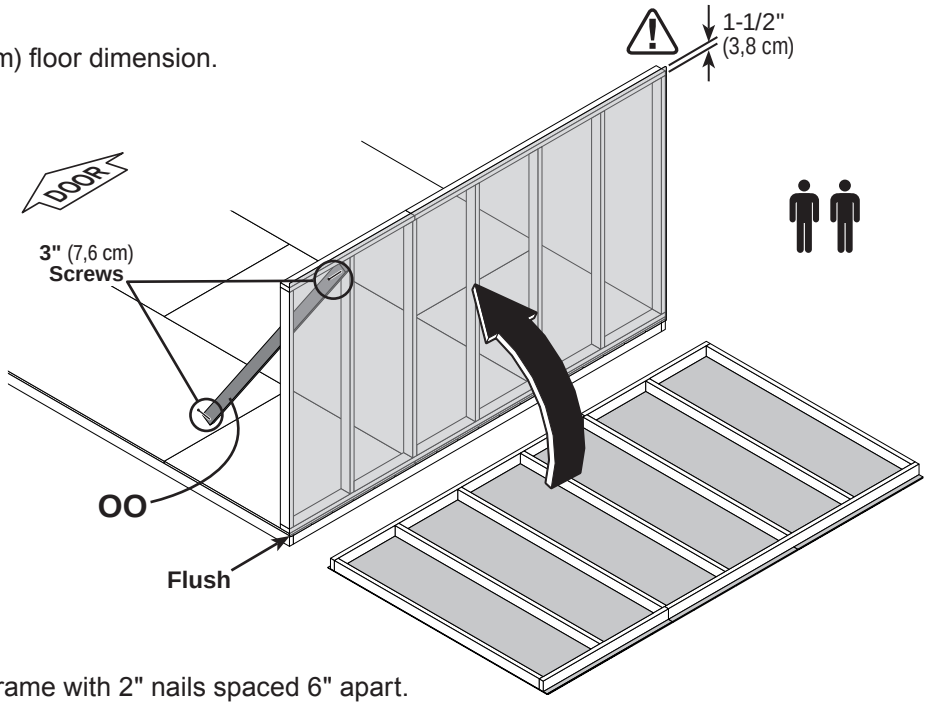

2 Secure lower edge of panel to floor frame with 2" nails spaced 6" apart. Angle nails into floor frame **(Fig. A)**.

Secure wall bottom plates to floor with 3" nails **(Fig. A)**.

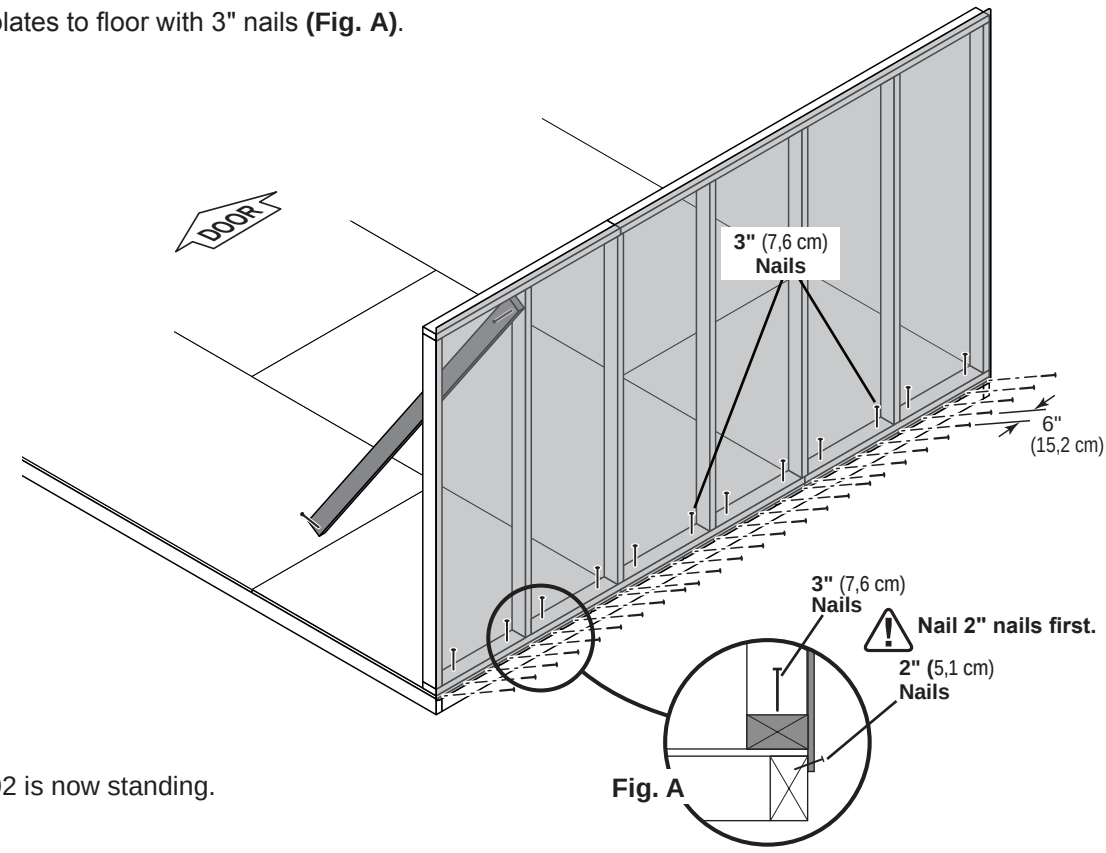

Fig. A

FINISH

Your 12' gable wall 02 is now standing.

1st 24' EAVE WALL INSTALLATION

PARTS REQUIRED

x5 — 3" (7,6 cm)

x2 — 2" (5,1 cm)

x2 — **TJ** Temporary Brace
2 x 4 x 92-5/8" (5,1 x 10,2 x 235 cm)

x13 — 1-1/2" (3,8 cm)

x54 — 2" (5,1 cm)

x24 — 3" (7,6 cm)

BEGIN

1

Place 1st 24' eave wall 16 centered on floor.
The 1-1/2" (3,8 cm) overlap is to the top.
Use (2) **TJ** as a temporary brace, as shown.
Secure **TJ** with (2) 3" screws.

Secure wall with (1) 2" screw into 12' wall bottom plate **(Fig. A)** and top plate **(Fig. B)**.

Secure wall to bottom plate first.

ENSURE PANEL CORNERS ARE FLUSH.

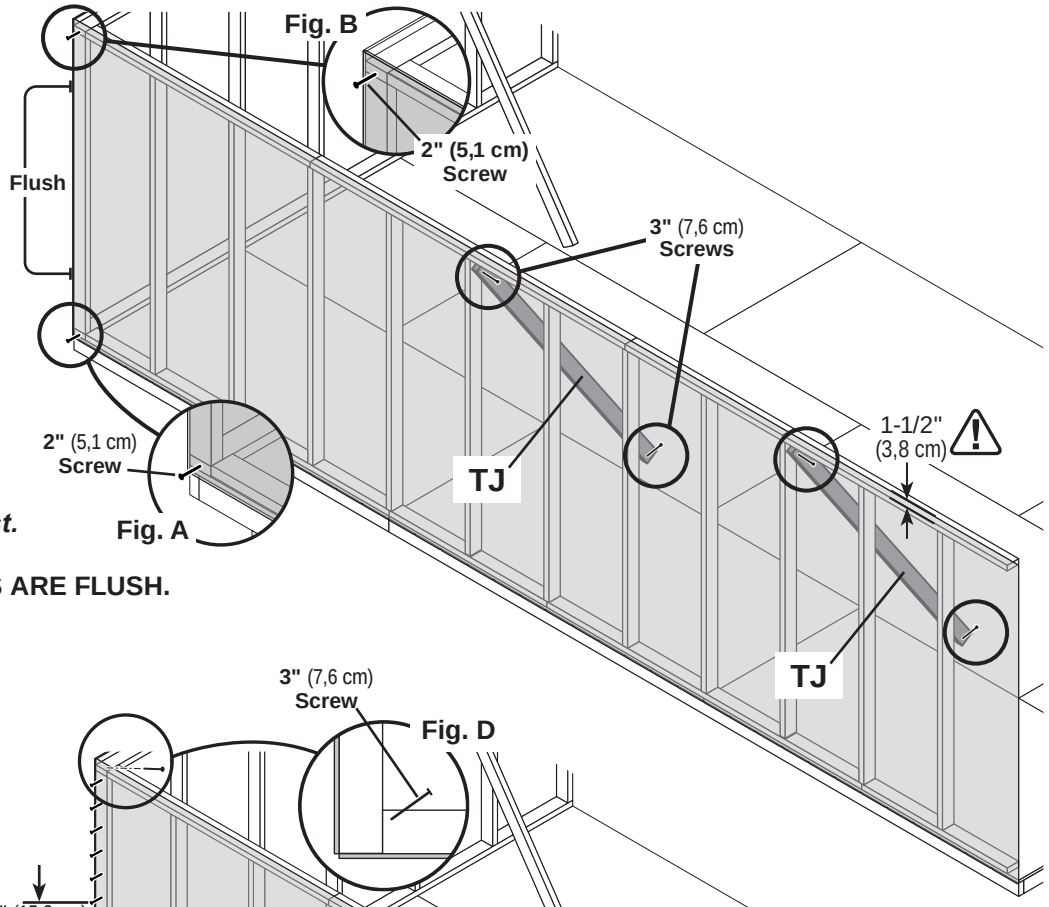

2

Nail lower edge of panels to floor with 2" nails spaced 6" apart.
Angle nails into floor frame **(Fig. C)**.

Secure panel to 12' wall stud with 1-1/2" nails spaced 6" apart.

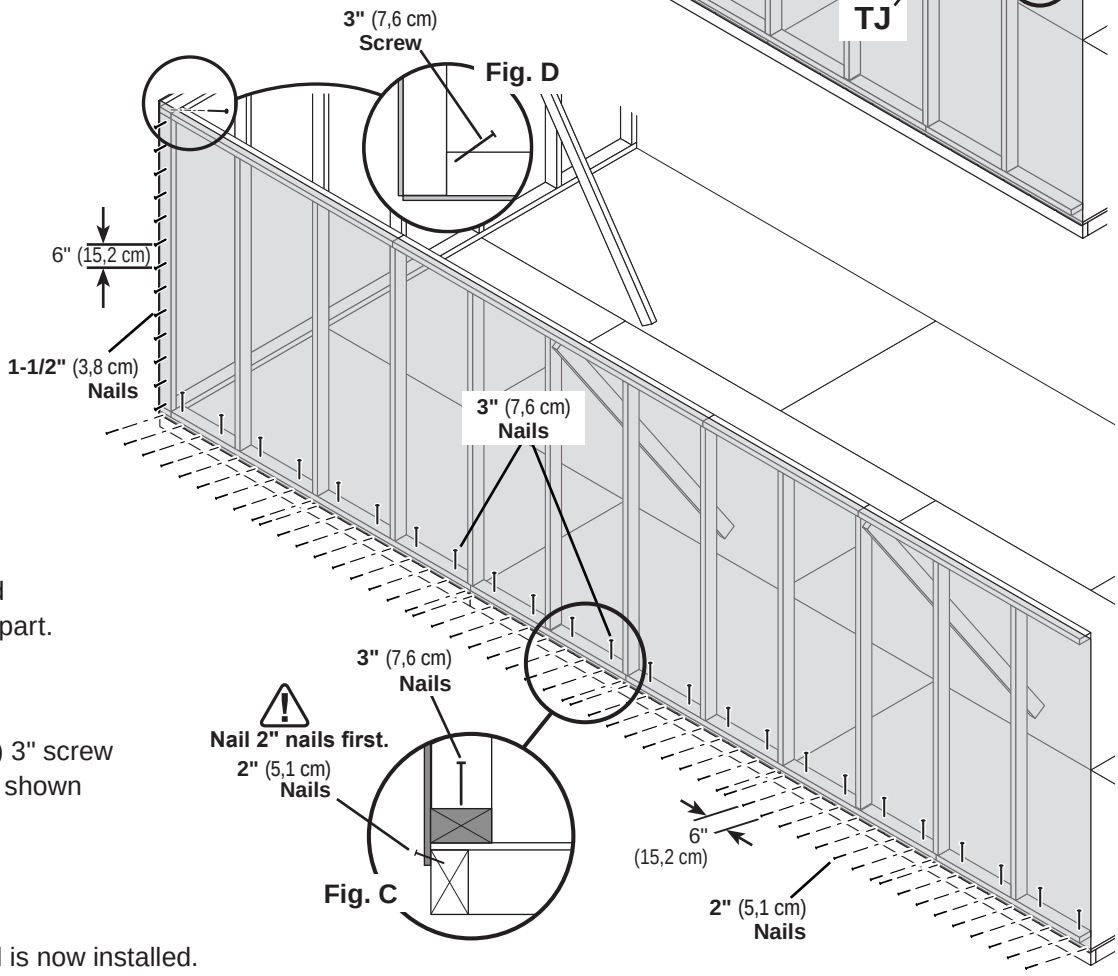

3

Secure wall top plate with (1) 3" screw at the corner at an angle, as shown **(Fig. D)**.

FINISH

Your 1st 24' eave wall is now installed.

2nd 24' EAVE WALL INSTALLATION

PARTS REQUIRED:

x4 3" (7,6 cm)

x2 2" (5,1 cm)

x54 2" (5,1 cm)

x24 3" (7,6 cm)

x2 **TJ** **Temporary Brace**
2 x 4 x 92-5/8" (5,1 x 10,2 x 235 cm)

BEGIN

1

Place 2nd 24' wall 16 centered on floor.
The 1-1/2" (3,8 cm) overlap is to the top.

Use **TJ** as a temporary brace as shown.
Secure **TJ** with (2) 3" screws.

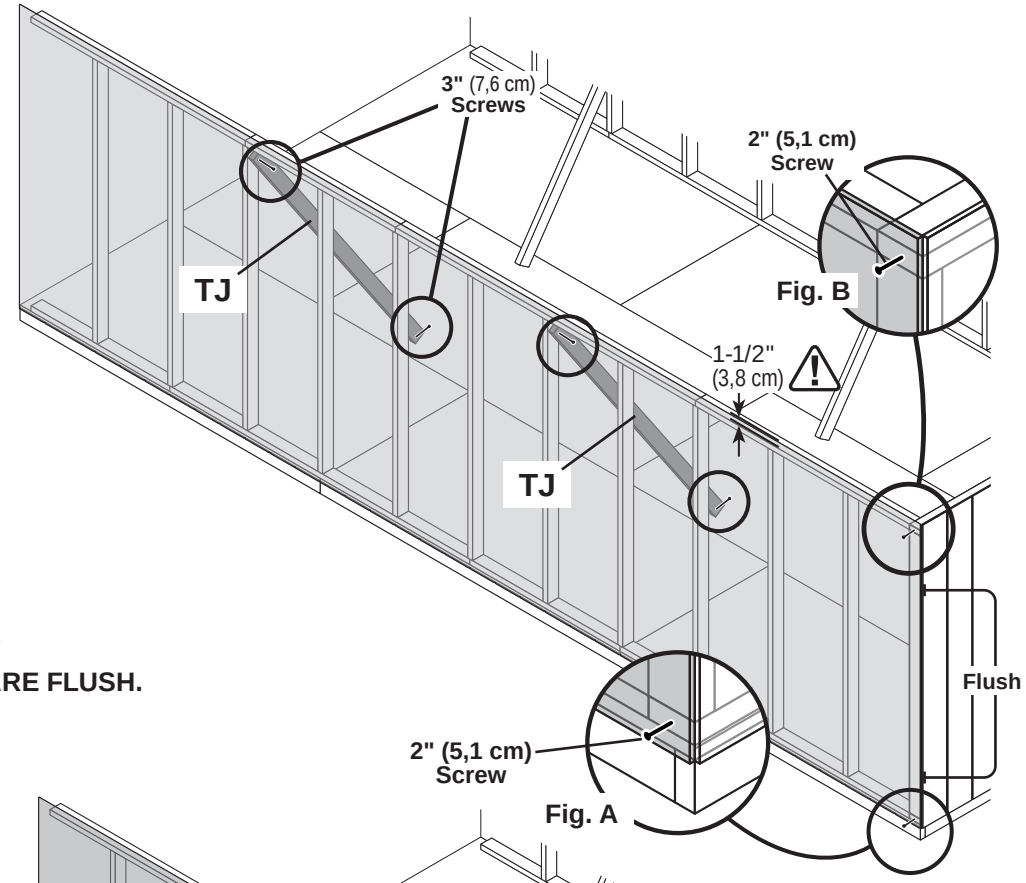

2

Secure wall with (1) 2" screw through gable wall panel into 12' wall bottom and top plates **(Fig. A, Fig. B)**.

Secure wall to bottom plate first.

ENSURE PANEL CORNERS ARE FLUSH.

3

Nail lower edge of wall panels to floor frame with 2" nails spaced 6" apart. Angle nails into floor frame **(Fig. C)**.

Secure wall bottom plates to floor with 3" nails **(Fig. C)**.

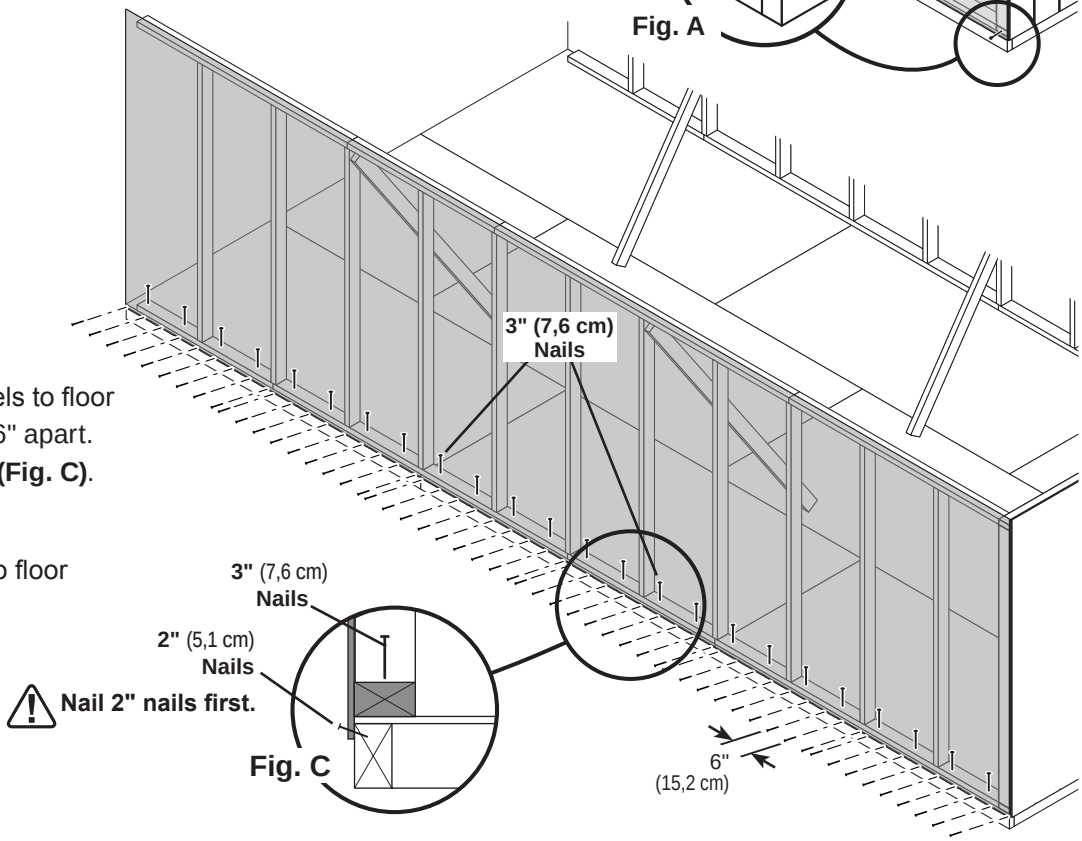

2nd 24' EAVE WALL 16 INSTALLATION

PARTS REQUIRED:

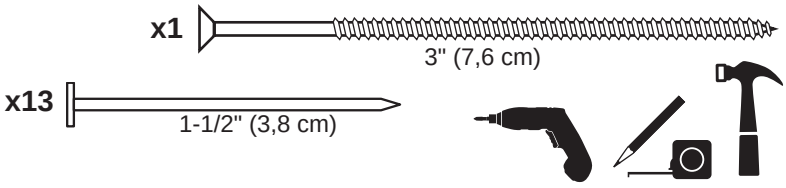

4

Secure 24' wall panel to 12' wall stud with 1-1/2" nails spaced 6" apart.

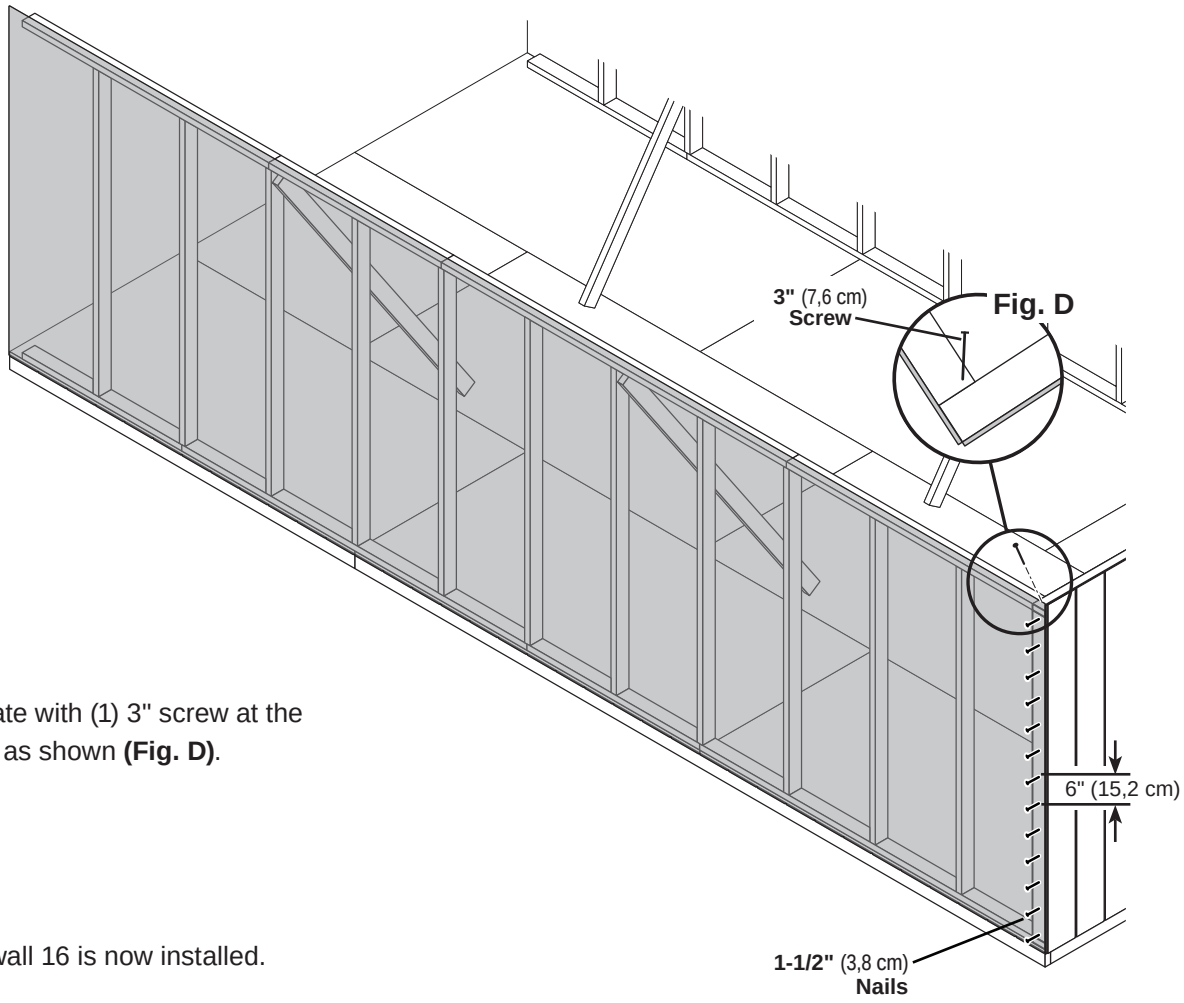

5

Secure wall top plate with (1) 3" screw at the corner at an angle as shown **(Fig. D)**.

FINISH

Your 2nd 24' wall 16 is now installed.

12' GABLE WALL 01 WITH DOOR INSTALLATION

PARTS REQUIRED

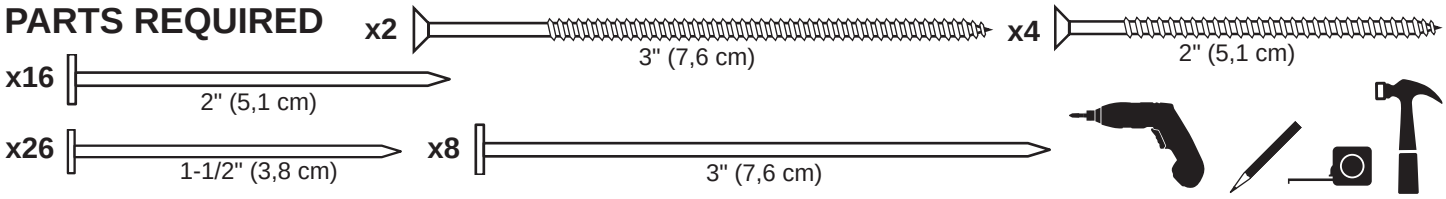

BEGIN

1 Place 12' gable wall on floor, centered between installed walls.

Secure wall with 2" screws into top and bottom plates **(Fig. A, Fig. B)**.

Secure wall to bottom plate first.

⚠ ENSURE PANEL CORNERS ARE FLUSH. ⚠

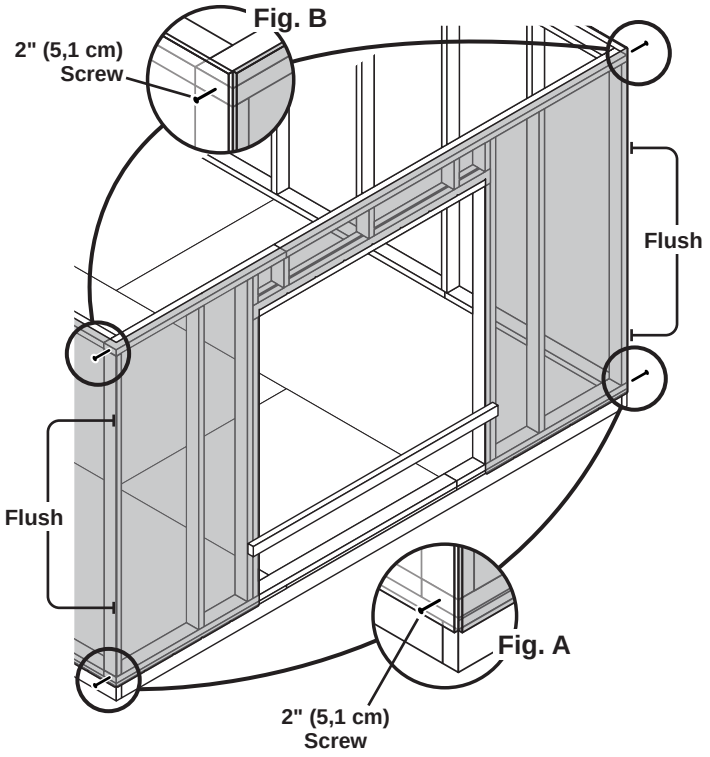

2 Nail lower edge of panels to floor with 2" nails spaced 6" apart. Angle nails into floor frame **(Fig. C)**.

Nail panels to 24' wall studs with 1-1/2" nails spaced 6" apart.

3 Secure wall top plates with 3" screws at each corner at an angle **(Fig. D)**.

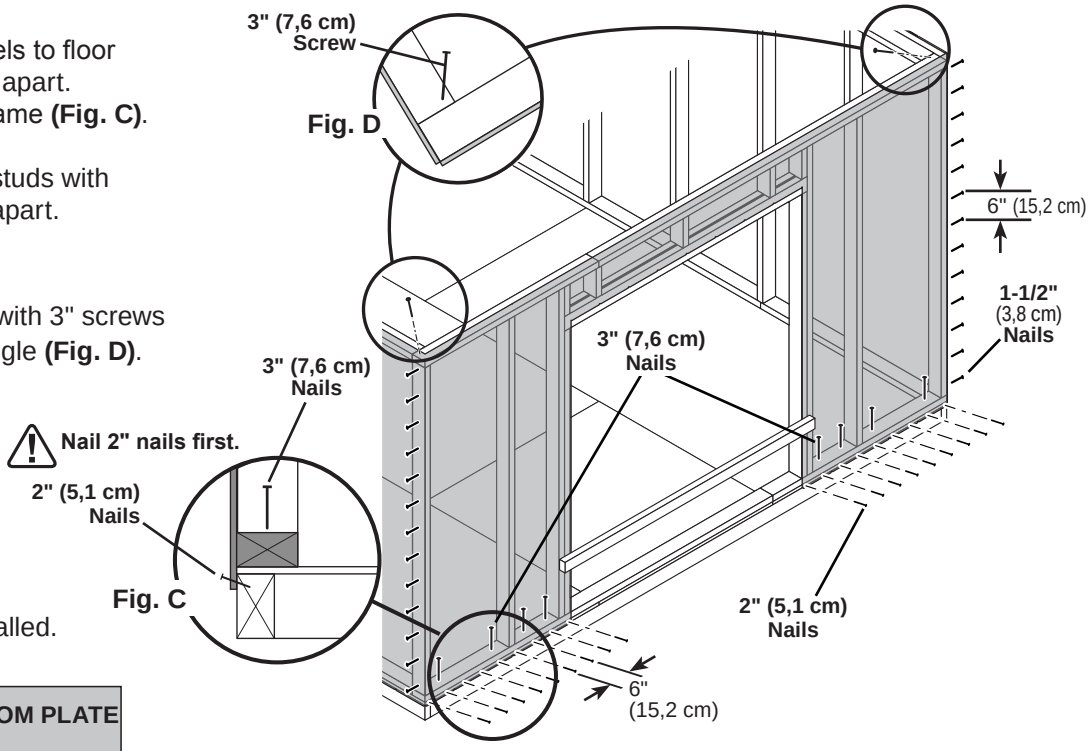

FINISH

Your walls are now installed.

CUT OUT AND REMOVE BOTTOM PLATE AT DOOR OPENING.
REMOVE TEMPORARY BRACING.

12' x 24' WALL DOUBLERS INSTALLATION

PARTS REQUIRED:

x2 HVC
2 x 4 x 44-3/8" (5,1 x 10,2 x 112,7 cm)

x4 SP
2 x 4 x 48" (5,1 x 10,2 x 121,9 cm)

x2 TJ
2 x 4 x 92-5/8" (5,1 x 10,2 x 235 cm)

x4 PT
2 x 4 x 96" (5,1 x 10,2 x 243,8 cm)

x84
3" (7,6 cm)

x8
3" (7,6 cm)

BEGIN

1

Orient parts on top of wall frames. Measure and mark from end of boards. Secure from top with (2) 3" nails spaced every 24" **(Fig. A).**

3

Secure from bottom with (2) 3" screws at each corner **(Fig. B).**

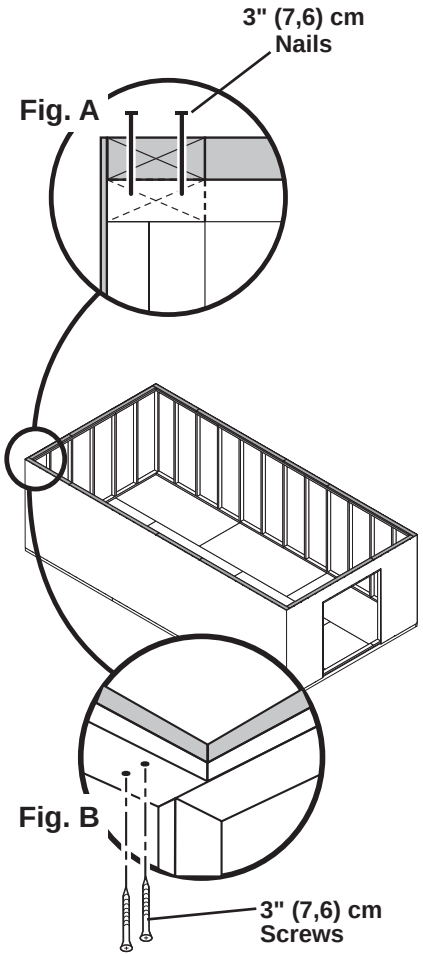

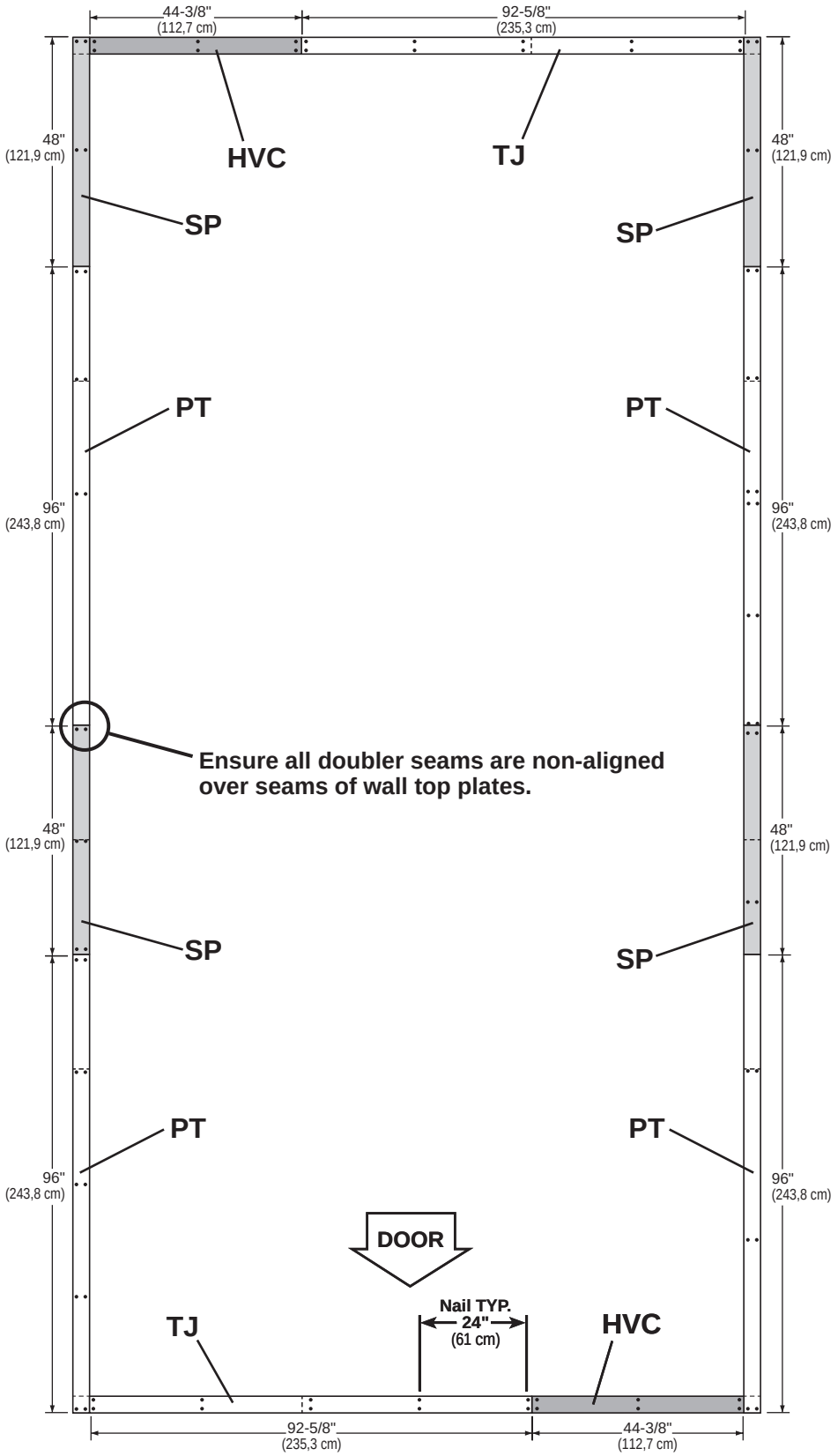

FINISH

Your wall doublers are now installed.

CONTINUE TO PAGE 52 TO RESUME CONSTRUCTION OF 12' X 24' SHED.

RAFTERS

12x12' 12x16' 12x20' 12x24'

PARTS REQUIRED:

x12	x16	x20	x24
x14	x18	x22	x26
x144	x192	x240	x288

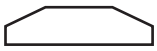
6 x 24" (15,2 x 60,9 cm)

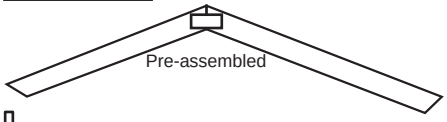

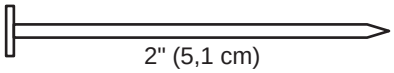
2" (5,1 cm)

x2 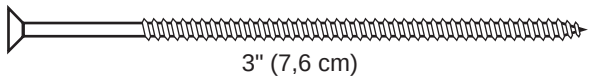
3" (7,6 cm)

x1 RL **Temporary Support**
2 x 4 x 24" (5,1 x 10,2 x 61 cm)

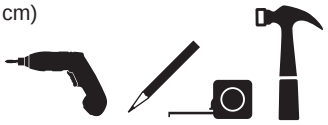

Build number of rafter assemblies depending on size of shed.

BEGIN

HINT:
Use floor and walls to help assemble rafters!

1 Measure 144-11/16 (367,5 cm) from the corner and install **RL** with (2) 3" screws.
Place two rafter-halves on floor and flush in the corners of wall and **RL**.
Flush rafters at peak. Secure gusset to rafters with 2" nails following the pattern shown **(FIg. A, Fig. B)**.

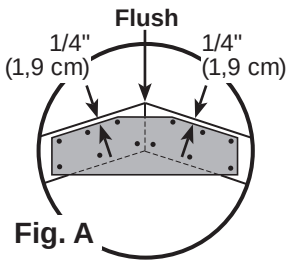

Fig. A

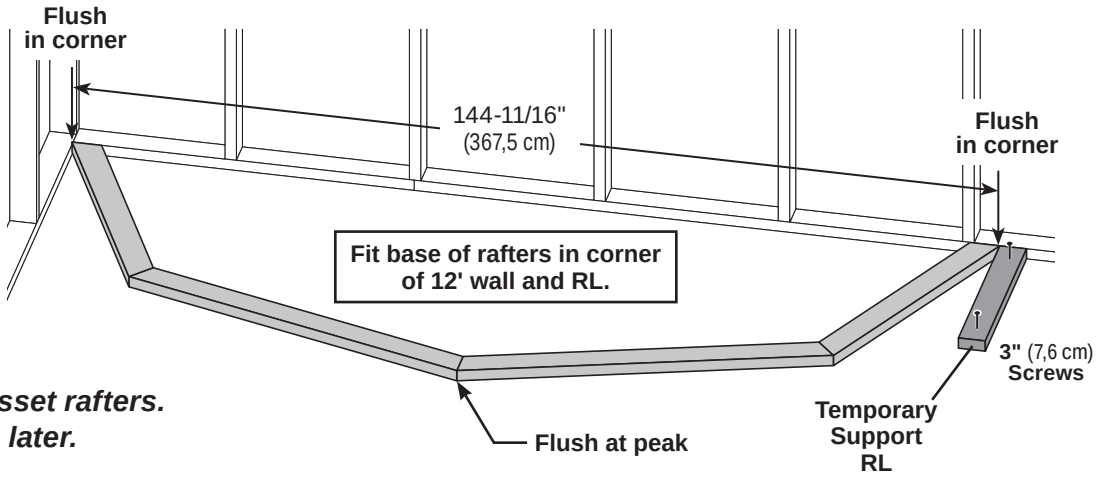

Set aside (2) 1-gusset rafters.
You will use them later.

Depending on your shed size, build rafters with (2) gussets (Fig. C).

2 Place two rafter-halves on floor and flush in the corners of wall and **RL**, as shown in STEP - 1.
Flush rafters at peak. Secure gusset to rafters with 2" nails following the pattern shown **(FIg. A)**.

3 Flip over rafter assembly and fasten second gusset to other side with 2" nails **(FIg. C)**.

Fig. B - ***Build 2 for all sizes***

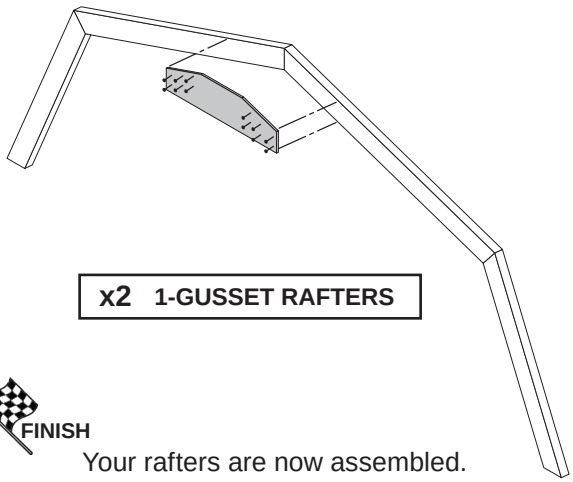

x2 1-GUSSET RAFTERS

Fig. C

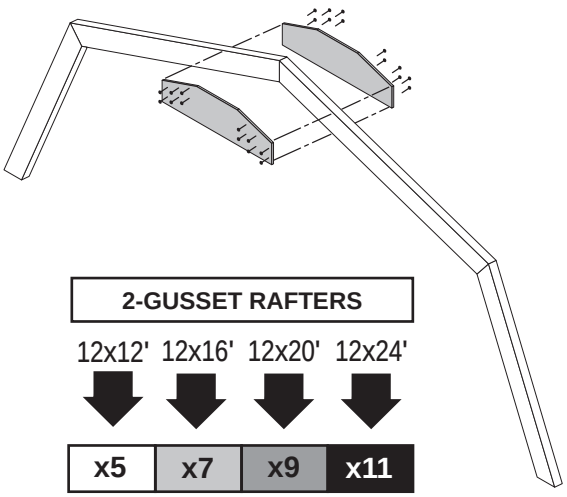

2-GUSSET RAFTERS

12x12' 12x16' 12x20' 12x24'

x5	x7	x9	x11

FINISH

Your rafters are now assembled.

Remove RL and screws from floor.

RAFTER INSTALLATION

PARTS REQUIRED:



12x12'	12x16'		
x5	x7	2-Gusset Preassembled	x2 1-Gusset Preassembled
x28	x36	3" (7,6 cm)	

BEGIN

1 Align rafters over the wall studs.



Check that you have the measurements shown.

Secure rafters with (2) 3" screws angled at each end **(Fig. A, Fig. B)**.

Secure rafters on opposite side.

Maintain the measurements between rafters.

12' x 12'

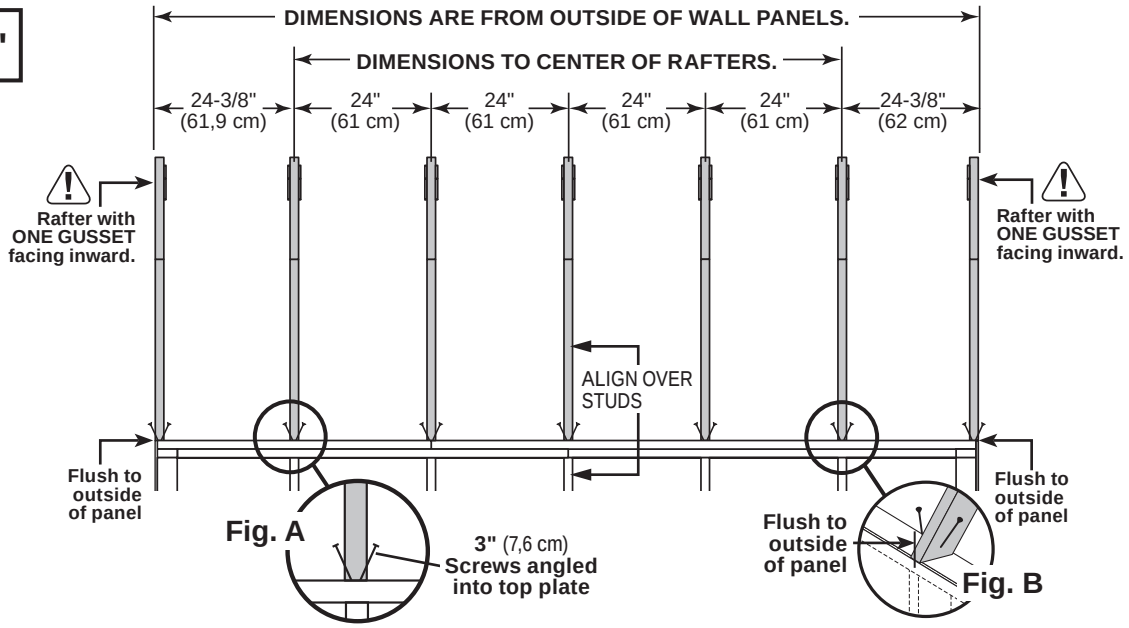

Maintain the measurements between rafters.

12' x 16'

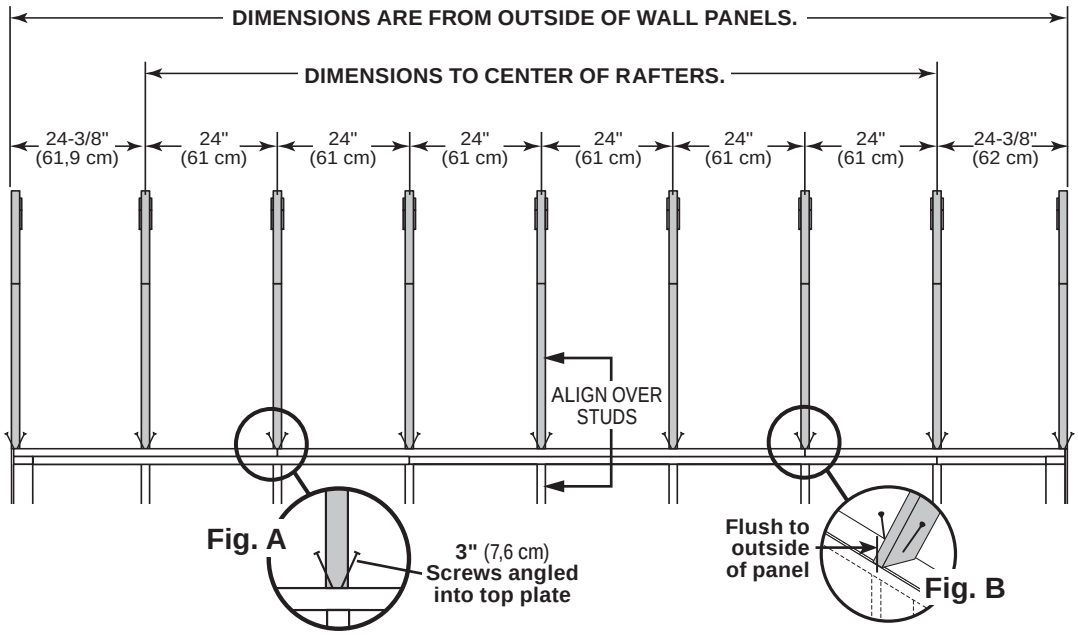

FINISH

Your rafters are now installed.

RAFTER INSTALLATION

PARTS REQUIRED:



12x20'	12x24'		
x9	x11	2-Gusset Preassembled	x2 1-Gusset Preassembled
x44	x52	3" (7,6 cm)	

BEGIN

1 Align rafters over the wall studs.



Check that you have the measurements shown.

Secure rafters with (2) 3" screws angled at each end **(Fig. A, Fig. B)**.

Secure rafters on opposite side.

Maintain the measurements between rafters.

12' x 20'

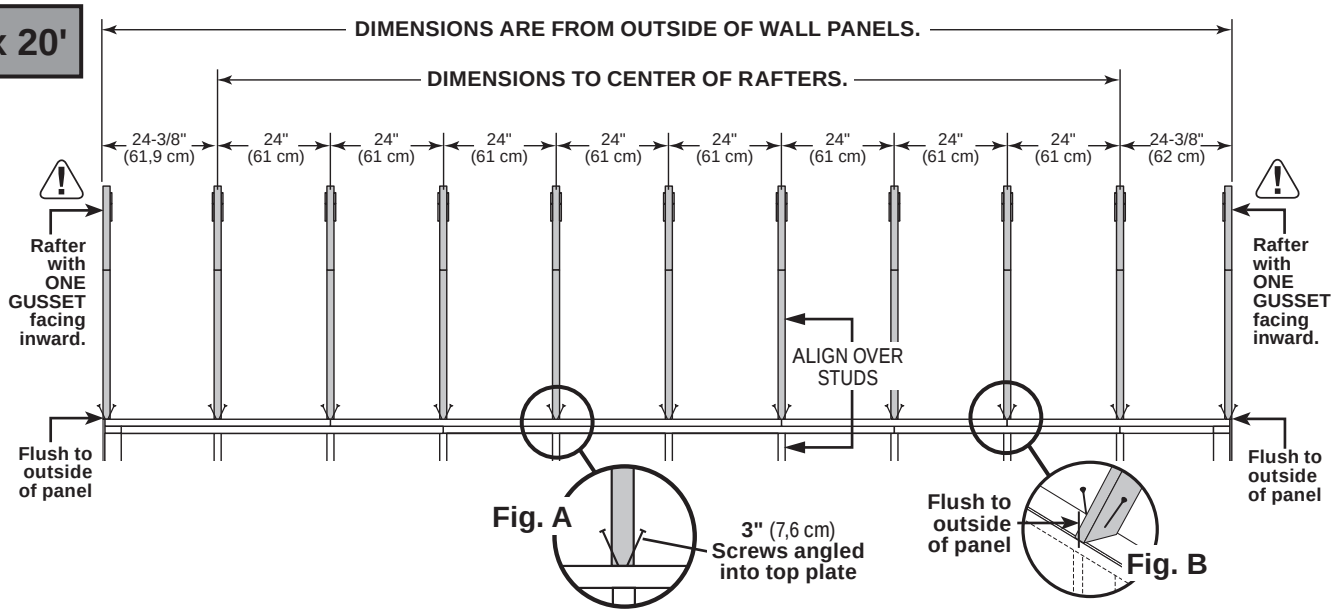

Maintain the measurements between rafters.

12' x 24'

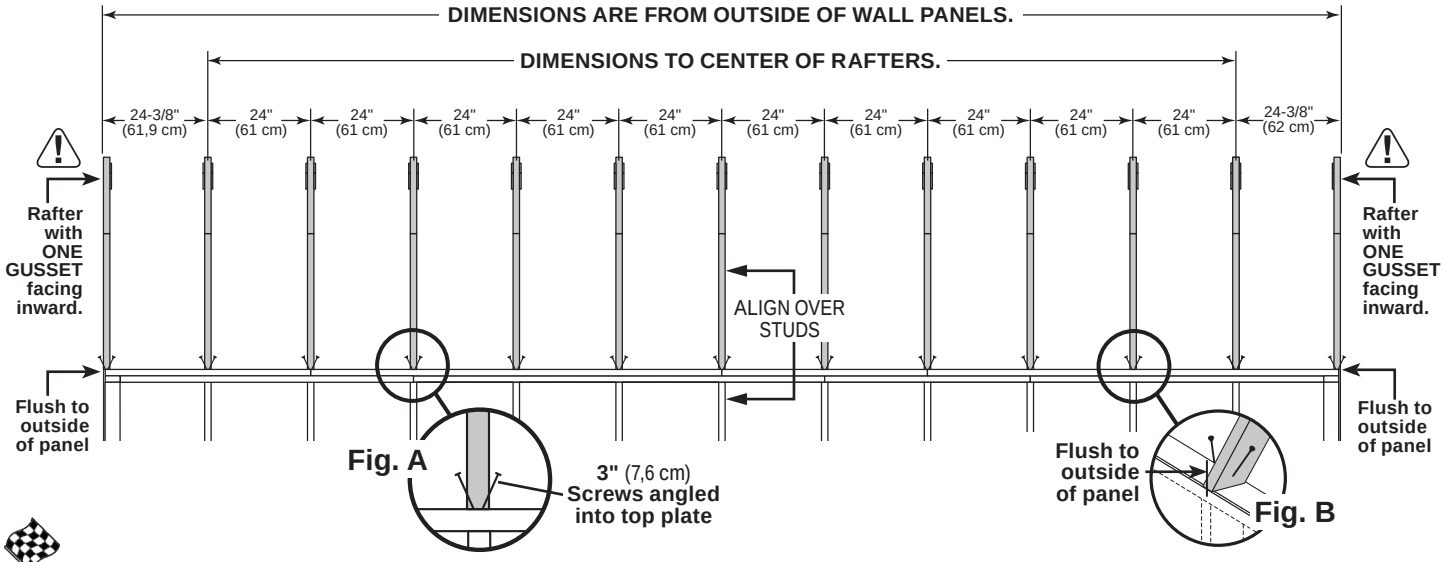

FINISH

Your rafters are now installed.

GABLE UNITS

PARTS REQUIRED:

x4 **QL**
2 x 4 x 39" (5,1 x 10,2 x 99,1 cm)

x64
1-1/2" (3,8 cm)

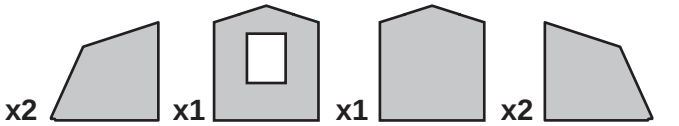

x2





Install gable panels with the primed side facing up.

BEGIN

1 Place middle panel on (2) **QL**. Arrange parts to measurements shown.
Secure panel with 1-1/2" nails spaced 6" apart along edge.
Check measurements as you build the gable unit.

2 Place left and right panels on **QL**, flush to middle panel.
Secure panel with 1-1/2" nails spaced 6" apart along edge.

Mark the center of the middle gable panel.

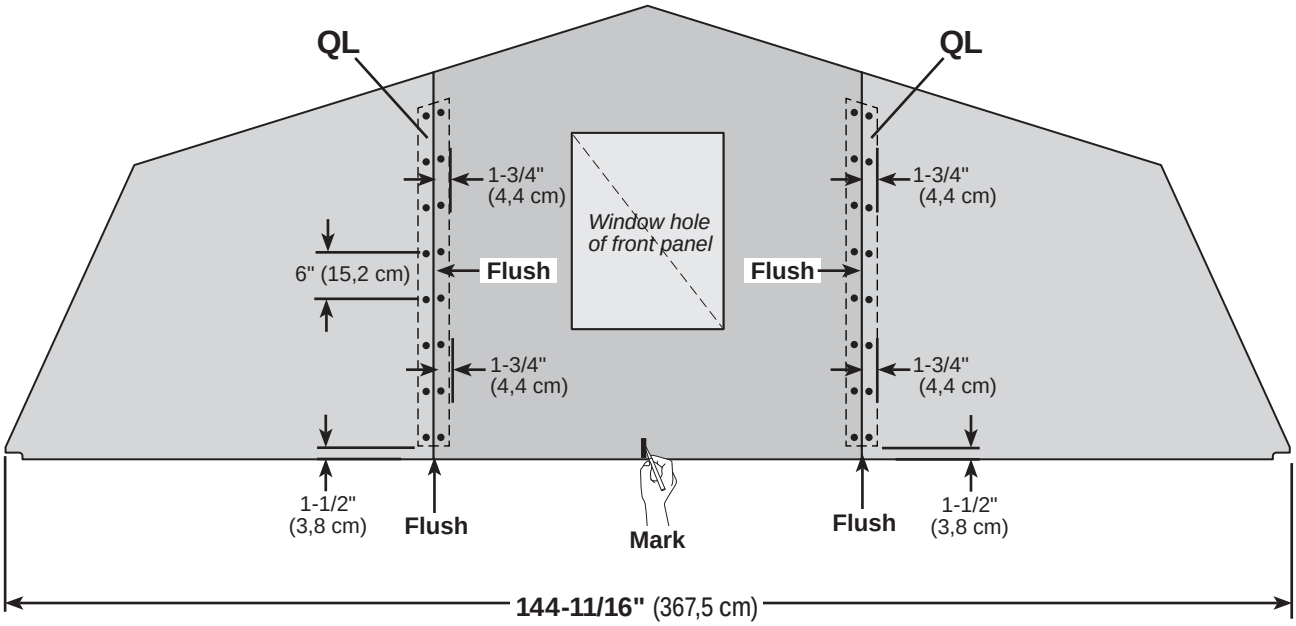

Repeat steps to assemble the 2nd gable unit.

FINISH

Your (2) gable units are now assembled.

GABLE INSTALLATION

PARTS REQUIRED:



Preassembled



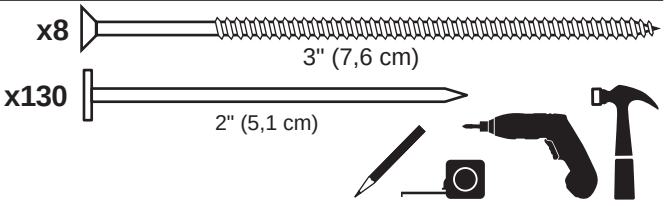

BEGIN

1 Measure 1-1/2" (3,8 cm) down from top plate doubler and mark at each side as shown. Set gable unit on top plate. Fasten with (1) 2" nail on each side.



⚠ **BE SURE GABLE IS CENTERED ON WALL BEFORE NAILING.**

Continue nailing lower edge of panels to wall doubler with 2" nails spaced 6" apart.

2 Secure gable panels to rafter with with 2" nails spaced 6" apart.

3 Working inside, secure gable unit with (2) 3" screws angled into each **QL** at an angle **(Fig. A)**.

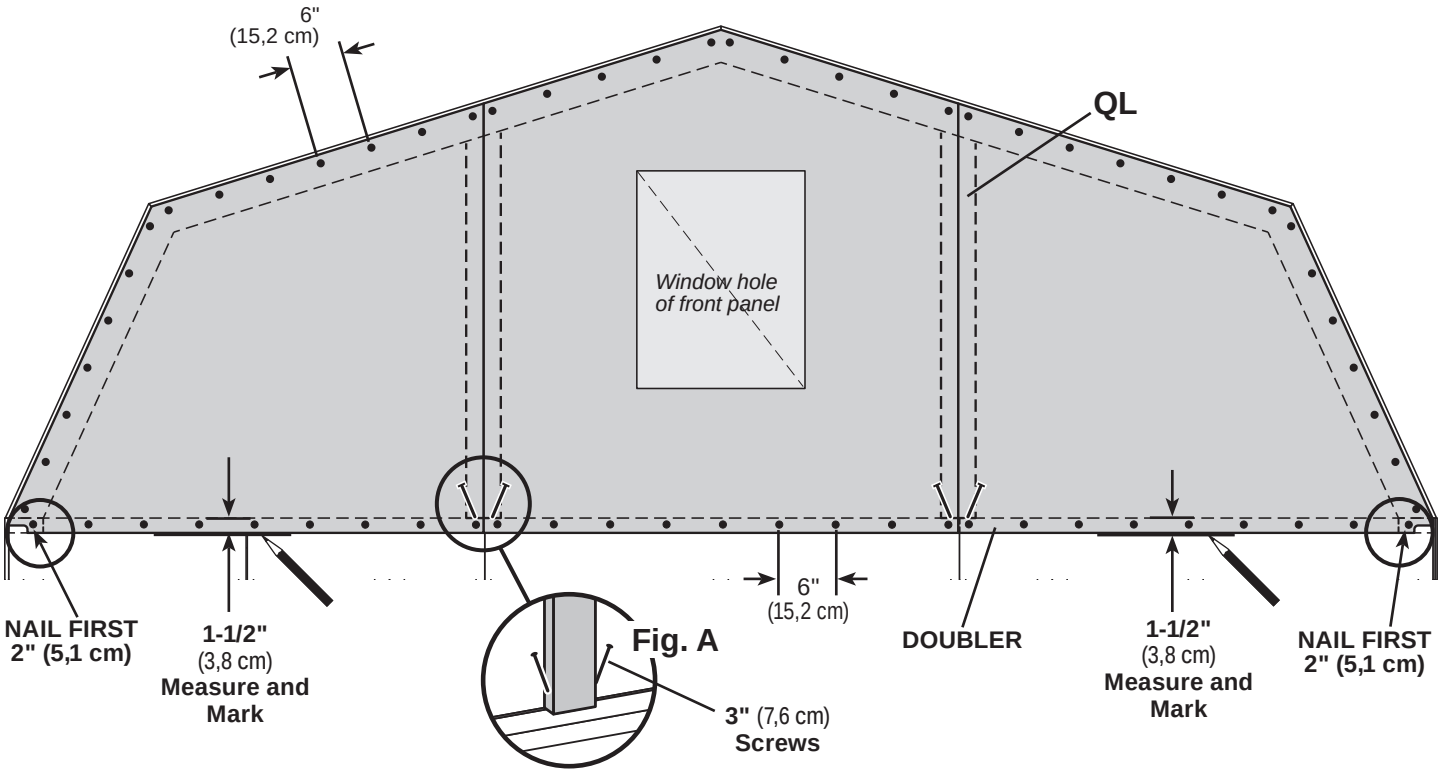

Repeat steps for installation of the opposite side 12' gable.

FINISH

Your gable units are now installed.

12' x 12' ROOF PANELS

PARTS REQUIRED:

x1 — 7/16 x 48 x 96" (1,1 x 121,9 x 243,8 cm)

GAA — 3/4" GAUGE BLOCK

x4 — 2" (5,1 cm)

Roof panels may cause serious injury until securely fastened.

Note: Install all roof panels with the rough side up (painted grid lines).

BEGIN

1

Place the **48" x 96"** panel on rafters with a 3/4" measurement on the rafter **(Fig. A)** and the panel flush at the peak **(Fig. B)**.

Secure panel with (2) 2" nails in the corners.

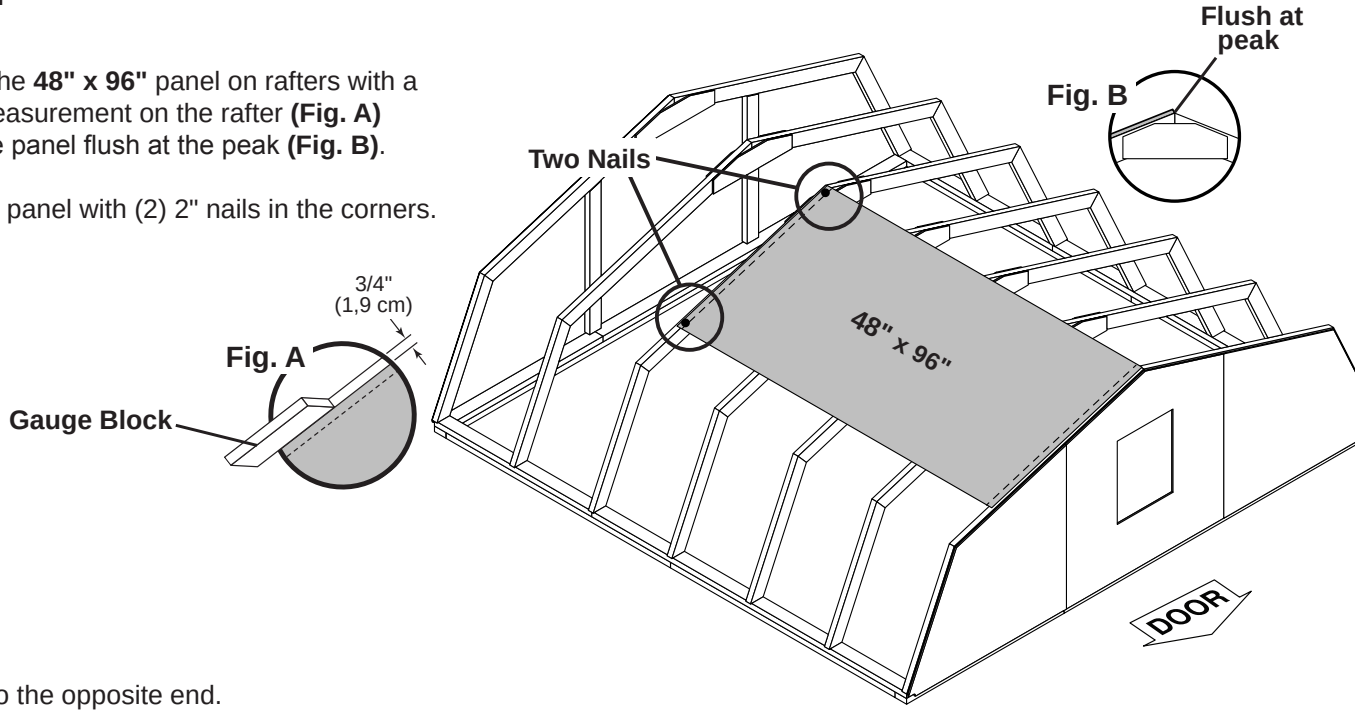

2

Move to the opposite end.
Using the long edge of the panel as a lever, move the panel side-to-side until the top corner is flush to the peak **(Fig. B)** and there is a 1/2" measurement on the gable end rafter **(Fig. C)**.

Secure panel with (2) 2" nails in the corners.

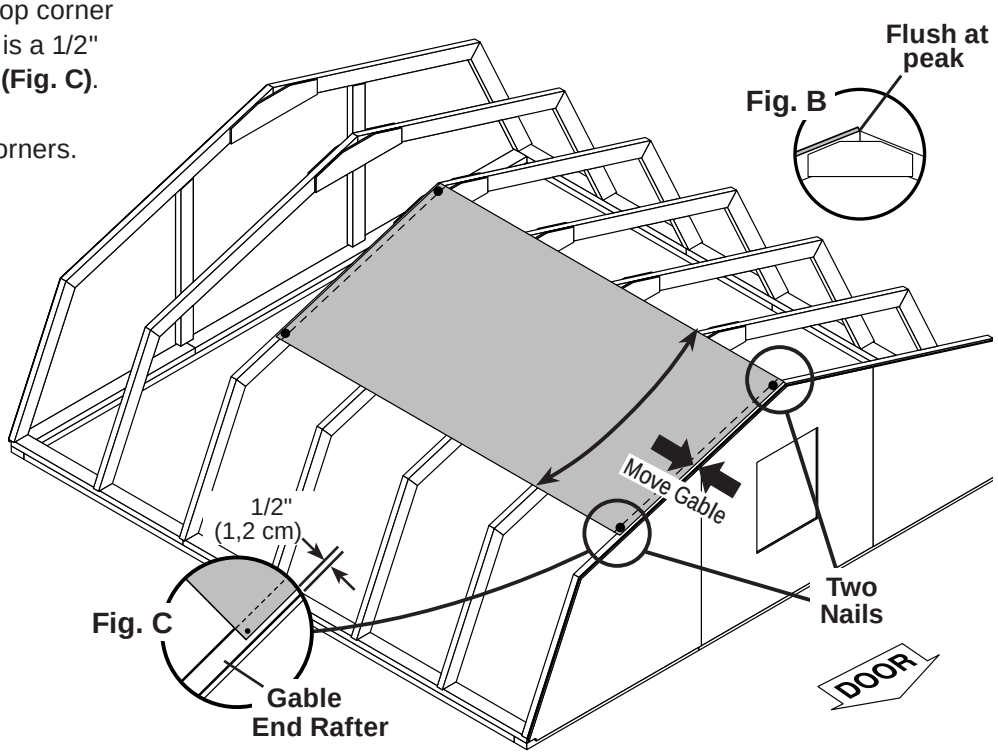

12' x 12' ROOF PANELS

PARTS REQUIRED:

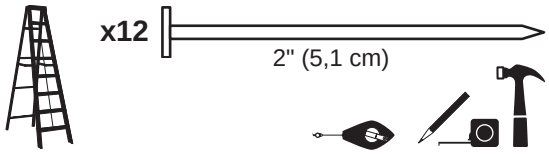

x1 47-7/8 x 48" (121,6 x 121,9 cm)

3

Install a **23-7/8" x 48"** roof panel flush to the installed panel and flush at peak **(Fig. B)**.

Secure panel with (1) 2" nail in each corner.

4

Move the gable end rafter edge until it is 1/2" from the **23-7/8" x 48"** roof panel **(Fig. C)**.

Finish securing panel with (1) 2" nail in each corner.

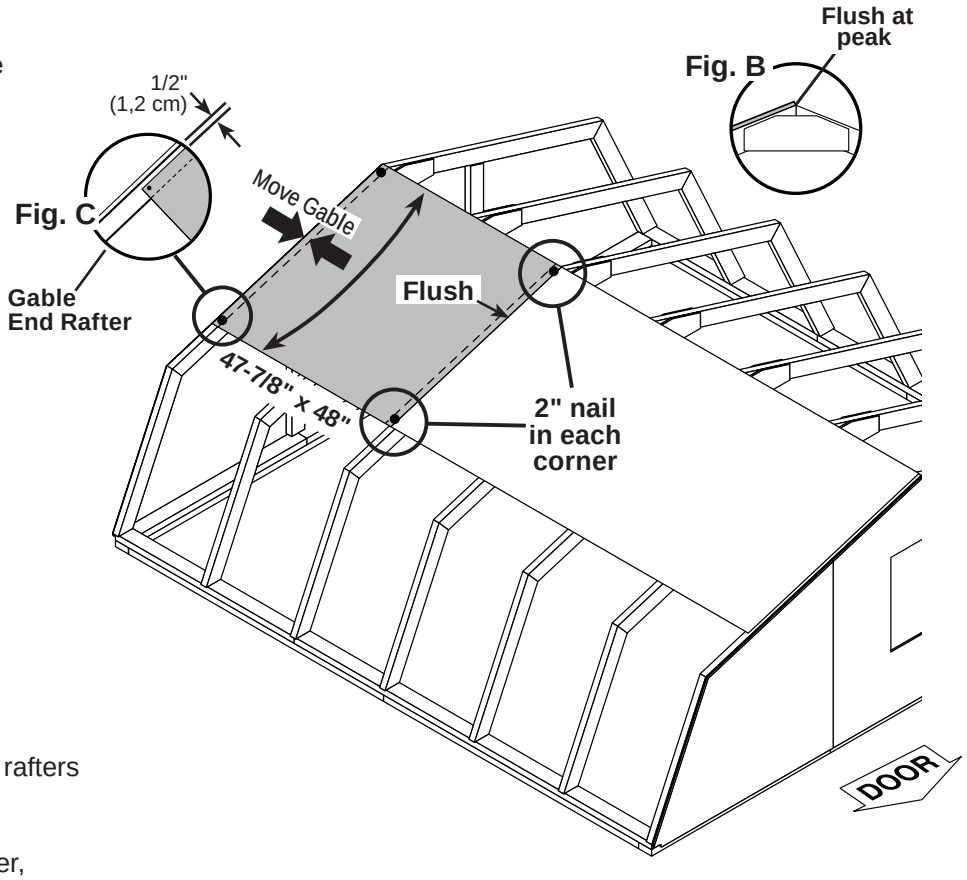

5

Maintain spacing between the center of the rafters at the lower edge of the panels **(Fig. D)**.

Secure panels with (1) 2" nail into each rafter, as shown.

Move to the top of the panel and keep spacing between the center of the rafters.

Secure panels with (1) 2" nail into each rafter.

Fig. D

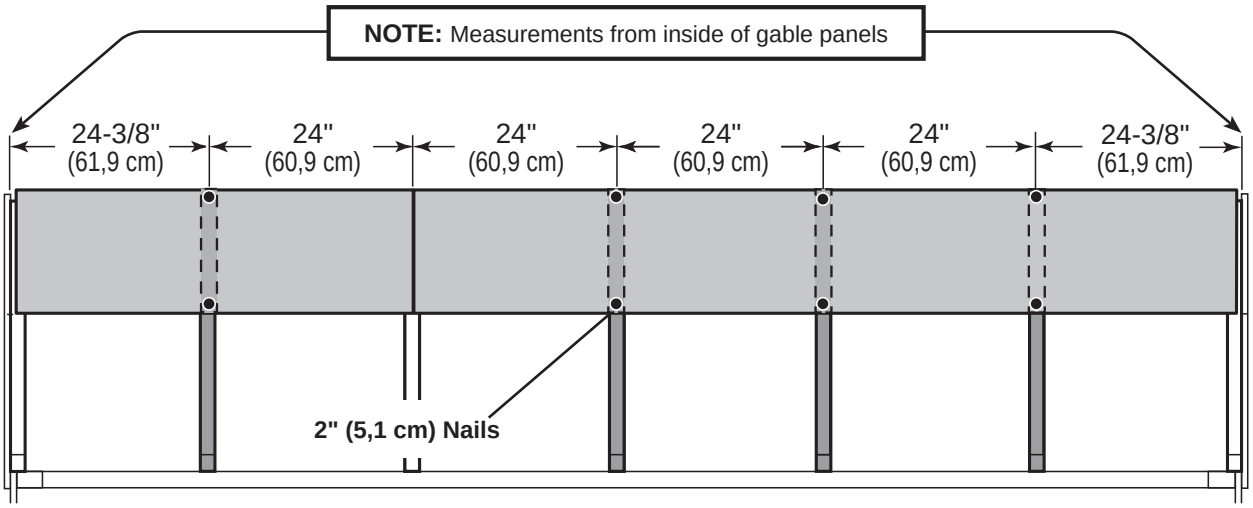

12' x 12' ROOF PANELS

PARTS REQUIRED:

x1 23-7/8" x 96" (60,6 x 243,8 cm)

x1 23-7/8" x 48" (60,6 x 121,9 cm)

x1 12-1/2" x 96" (31,8a cm x 243,8 cm)

x24 2" (5,1 cm)

x1 11-7/8" x 96" (30,2 cm x 243,8 cm)

x1 11-7/8" x 48" (30,2 cm x 121,9 cm)

x1 12-1/2" x 48" (31,8 cm x 121,9cm)

GAA 3/4" GAUGE BLOCK



6 Next, install **12-1/2" x 48"** and **12-1/2" x 96"** roof panels with a 3/4" measurement on the rafter **(Fig A)** and flush to the installed panels **(Fig. E)**.

Secure panels with (1) 2" nail in each corner.

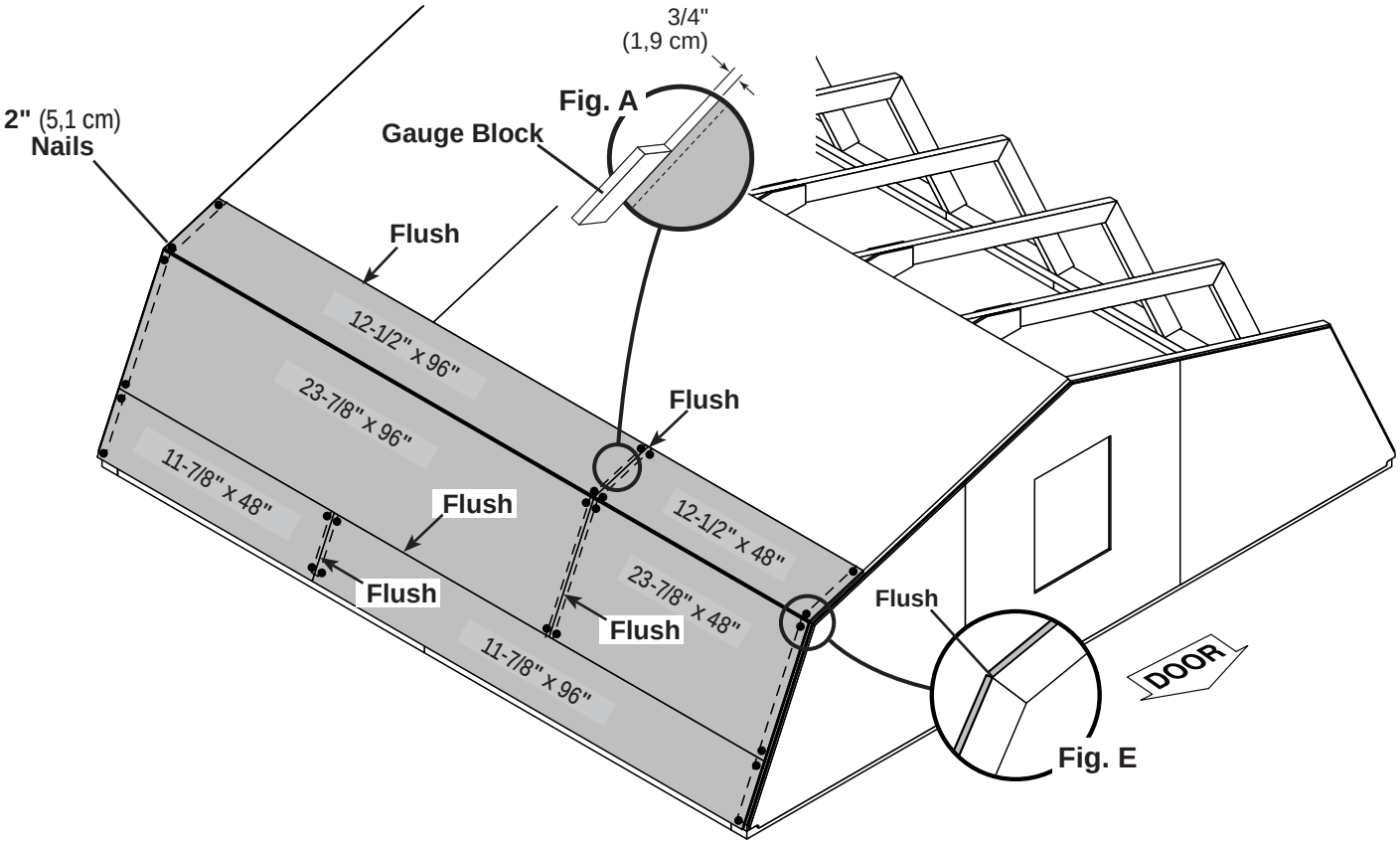

7 Install additional roof panels flush to the installed panels in the following order:

1. **23-7-8" x 48" (Fig. E)**
2. **23-7-8" x 96" (Fig. E)**
3. **11-7-8" x 96"**
4. **11-7-8" x 48"**

Install roof panels with a 3/4" measurement on the rafter **(Fig A)**.

Secure panels with (1) 2" nail in each corner.

12' x 12' ROOF PANELS

PARTS REQUIRED:

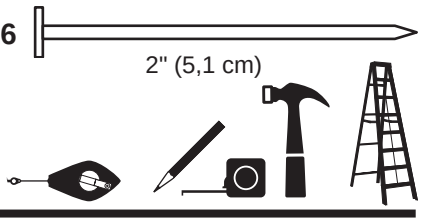

8 Secure all roof panels with 2" nails spaced 6" apart and 12" apart inside panels.

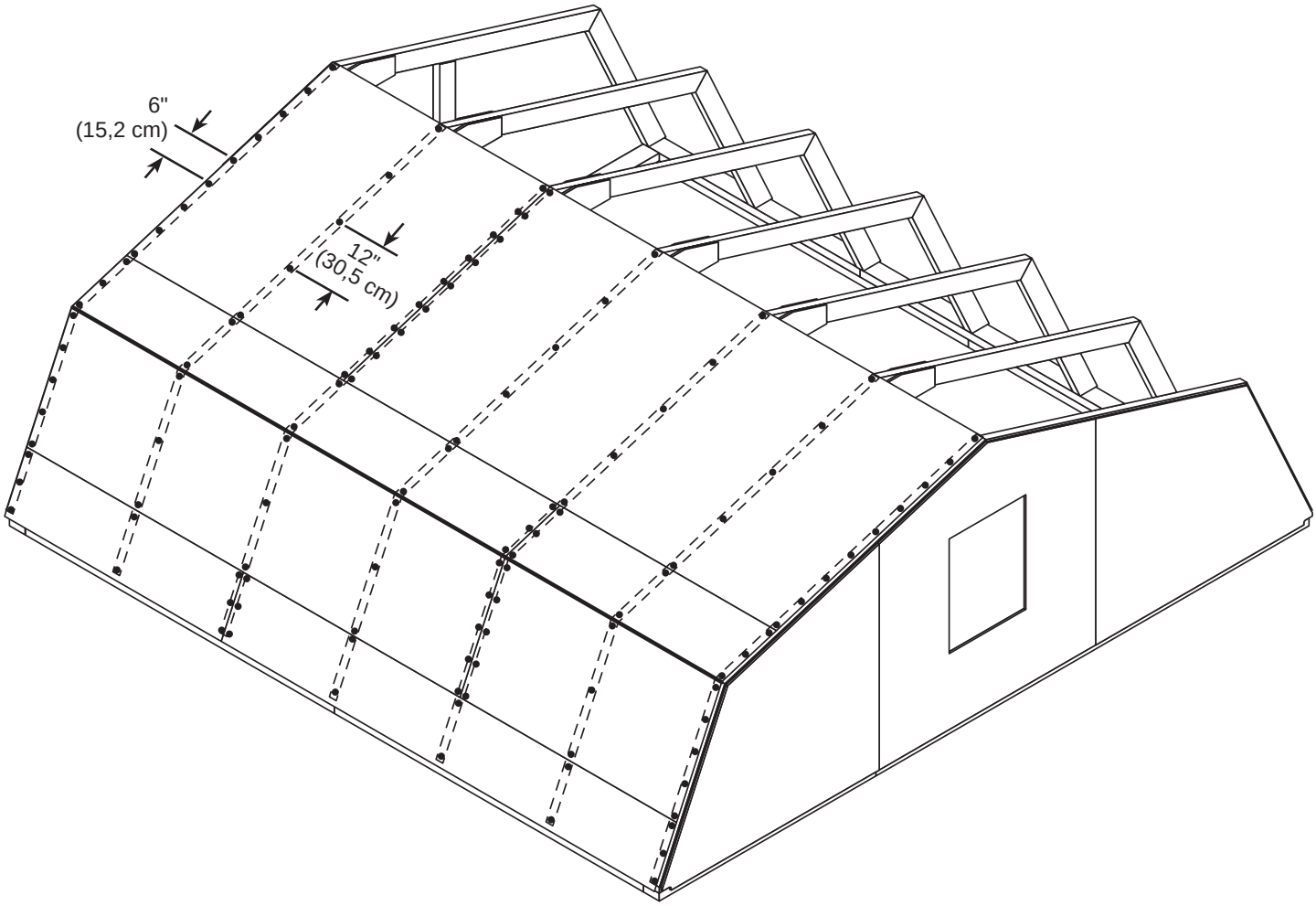

Repeat all steps to install roof panels on the opposite side.

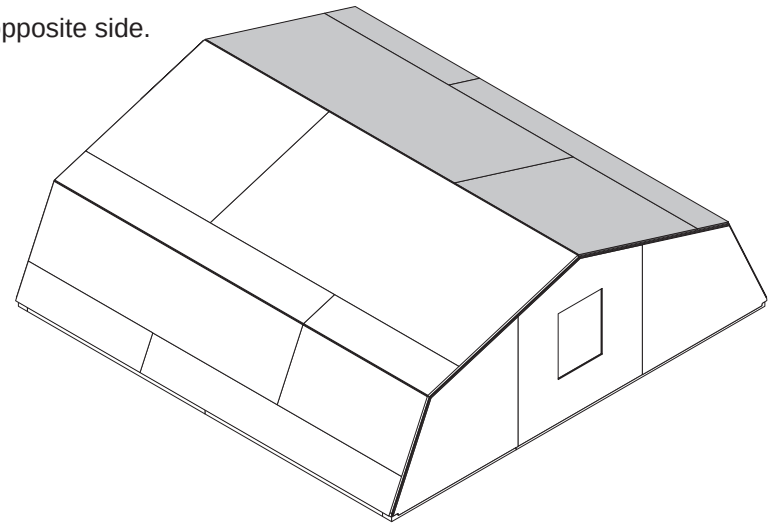

FINISH

Your roof panels are now installed.

12' x 16' ROOF PANELS

PARTS REQUIRED:

x1 — 48 x 96" (121,9 x 243,8 cm)

GAA — 3/4" GAUGE BLOCK

x4 — 2" (5,1 cm)

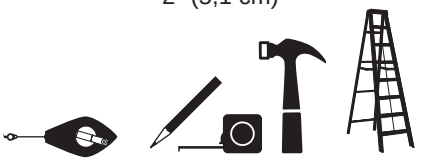

Roof panels may cause serious injury until securely fastened.

Note: Install all roof panels with the rough side up (painted grid lines).

BEGIN

1

Place the **48" x 96"** panel on rafters with a 3/4" measurement on the rafter **(Fig A)** and the panel flush at the peak **(Fig. B)**.

Secure panel with (1) 2" nail in each corner.

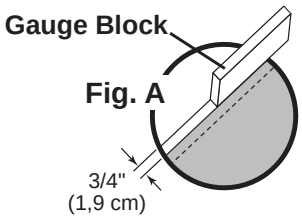

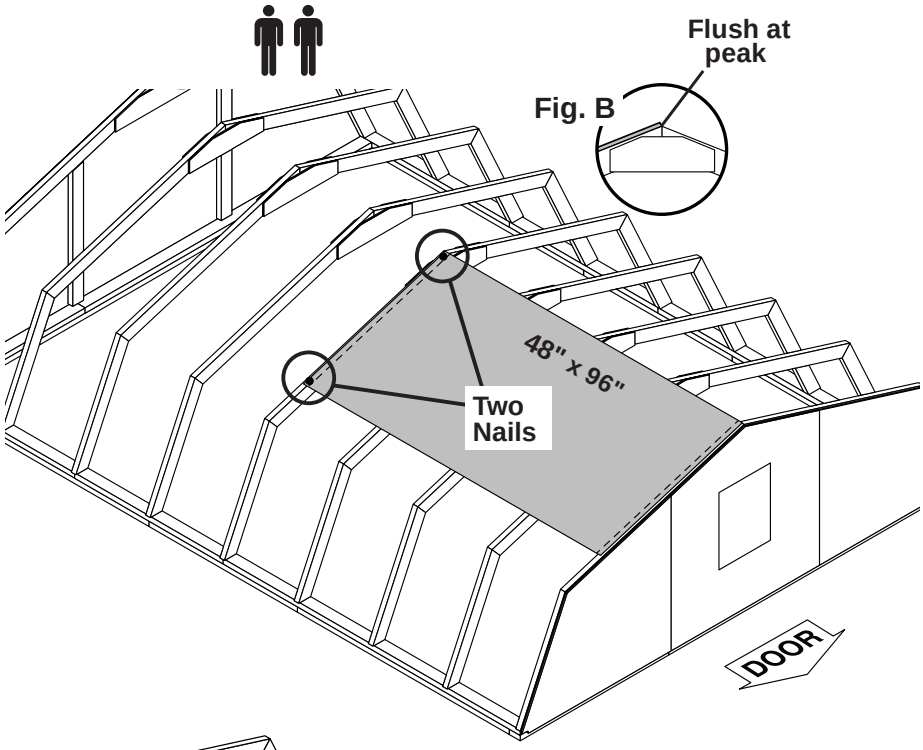

2

Move to the opposite end. Using the long edge of the panel as a lever, move the panel side-to-side until the top corner is flush to the peak **(Fig. B)**.

Move gable end rafter edge until it is 1/2" from the panel **(Fig. C)**.

Secure panel with (1) 2" nail in each corner.

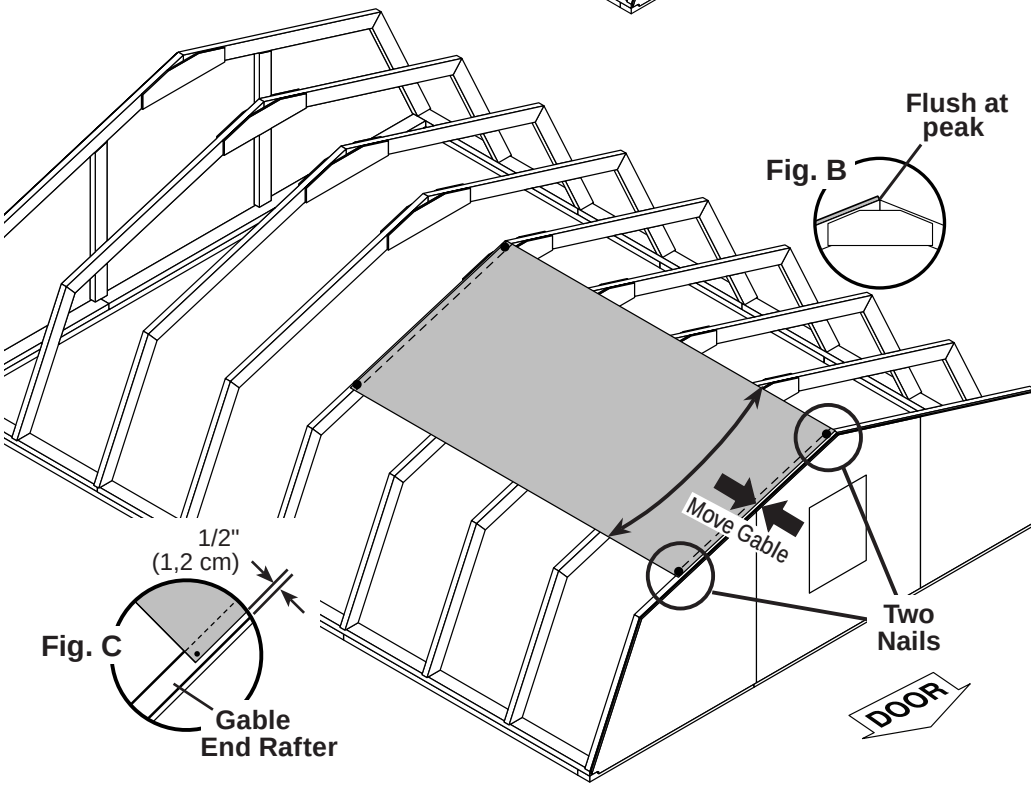

12' x 16' ROOF PANELS

PARTS REQUIRED:

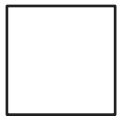



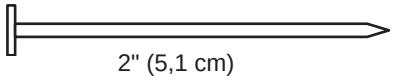

3

Install first **47-7/8" x 48"** roof panel flush to the installed panel and flush at the peak.
Secure panel with (1) 2" nail in each corner.

Move to the opposite end.
Using the unattached end of the panel as a lever, move the panel side-to-side until the top corner is flush to the peak **(Fig. B)** and there is a 3/4" measurement on the rafter **(Fig A)**.
Finish securing panel with (1) 2" nail in each corner.

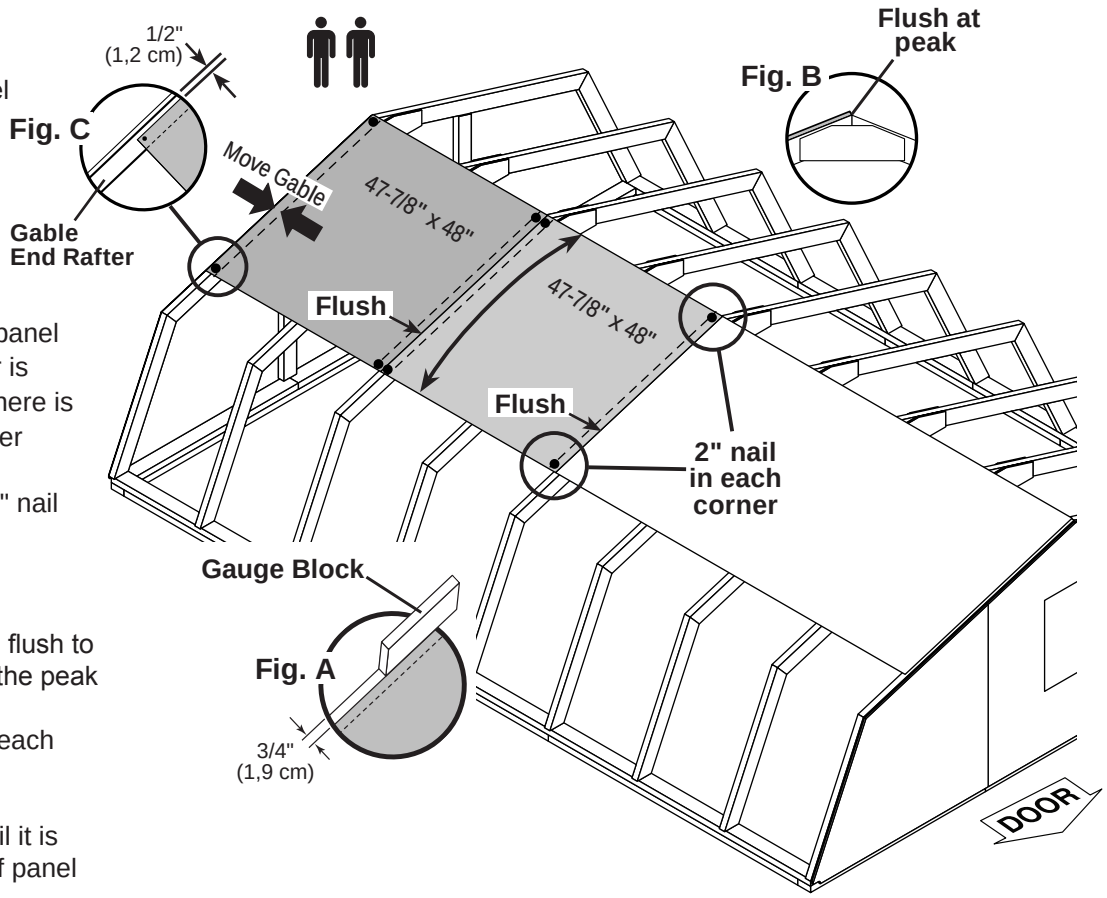

4

Install next 4**8" x 48"** roof panel flush to the installed panel and flush at the peak **(Fig. B)**.
Secure panel with (1) 2" nail in each corner.

Move gable end rafter edge until it is 1/2" from the 2nd 4**8" x 48"** roof panel **(Fig. C)**.
Finish securing panel with (1) 2" nail in each corner.

5

Maintain spacing between the center of the rafters at the lower edge of the panels **(Fig. D)**.
Secure panels with (1) 2" nail into each rafter, as shown.
Move to the top of the panel and keep spacing between the center of the rafters.
Secure panels with (1) 2" nail into each rafter.

Fig. D

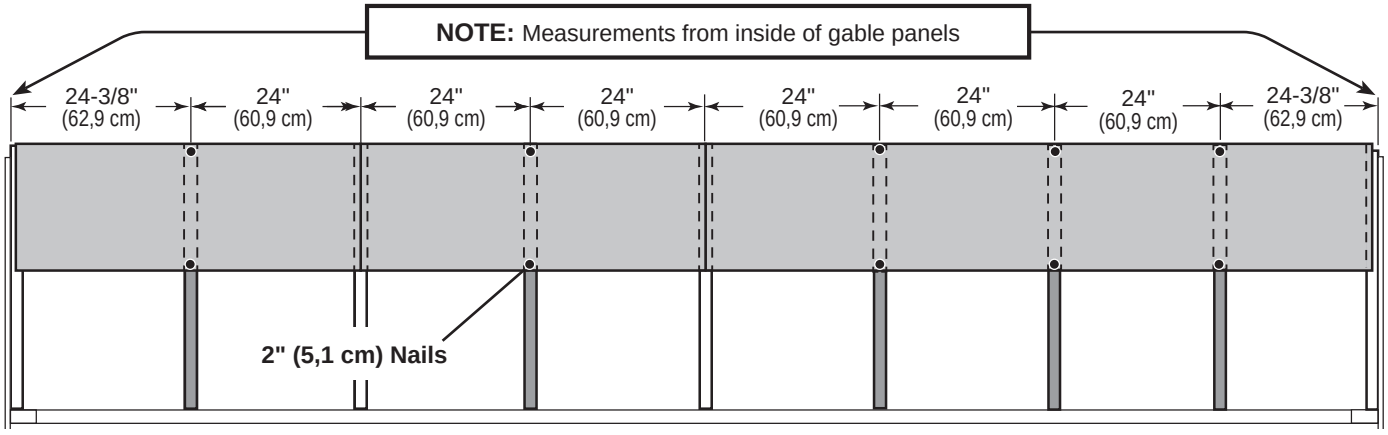

12' x 16' ROOF PANELS

PARTS REQUIRED:

x1 — 23-7/8" x 96" (60,6 x 243,8 cm)

x2 — 23-7/8" x 48" (60,6 x 121,9 cm)

x1 — 12-1/2" x 96" (31,8a cm x 243,8 cm)

x1 — 11-7/8" x 96" (30,2 cm x 243,8 cm)

x2 — 11-7/8" x 48" (30,2 cm x 121,9 cm)

x2 — 12-1/2" x 48" (31,8 cm x 121,9cm)

x36 — 2" (5,1 cm)

GAA

3/4" GAUGE BLOCK



6 Next, install front **12-1/2" x 48"** and **12-1/2" x 96"** roof panels with a 3/4" measurement on the rafter **(Fig A)**, and flush to the installed panels **(Fig. E)**.

Secure panels with (1) 2" nail in each corner.

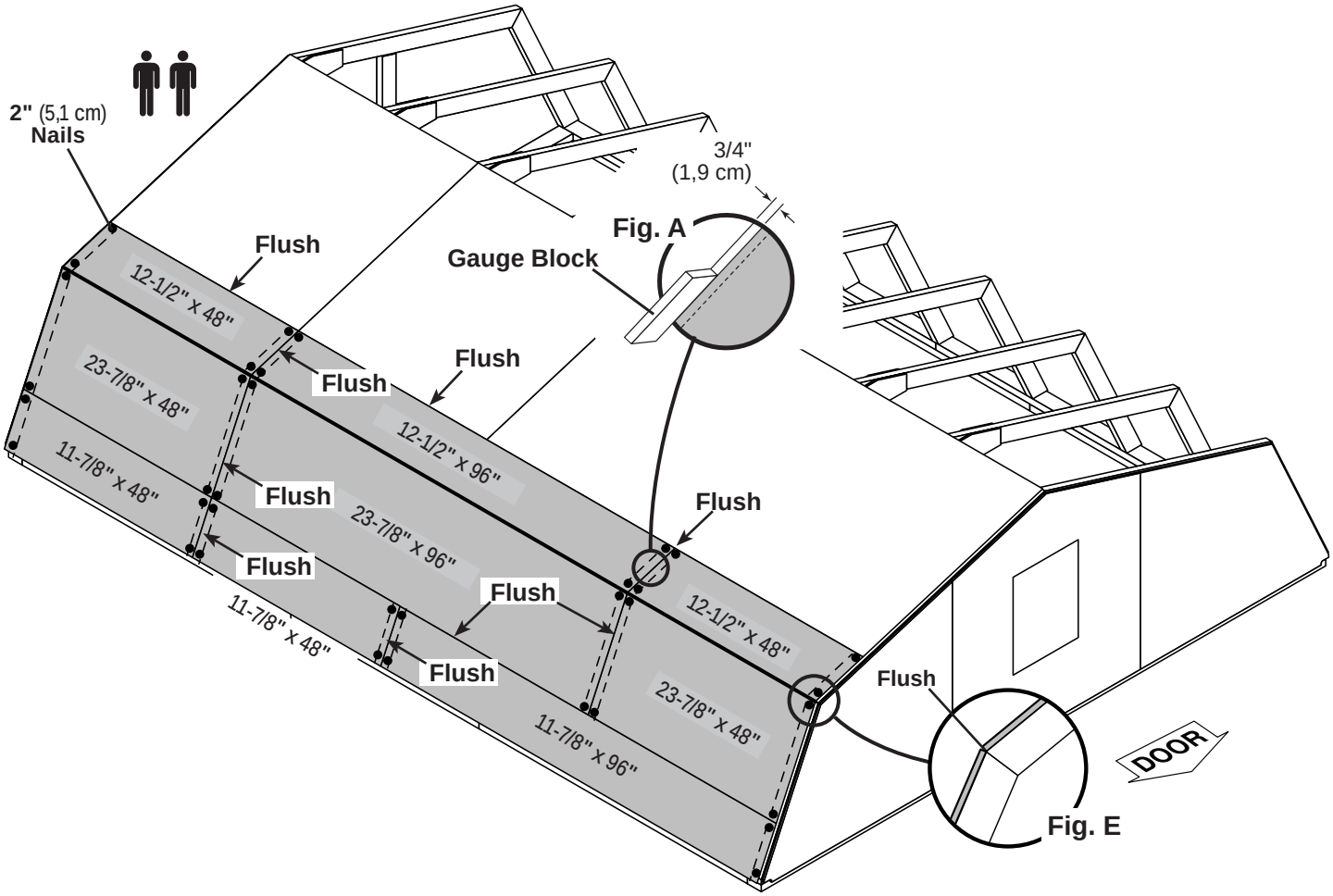

7 Install additional roof panels flush to the installed panels in the following order:

1. 2nd upper **12-1/2" x 48"**

2. 23-7/8" x 48", **23-7/8" x 96"** and 2nd **23-7/8" x 48" (Fig. E)**

3. 11-7/8" x 96", **11-7/8" x 48"** and 2nd **11-7/8" x 48"**

Install roof panels with a 3/4" measurement on the rafter **(Fig A)**.

Secure panels with (1) 2" nail in each corner.

12' x 16' ROOF PANELS

PARTS REQUIRED:

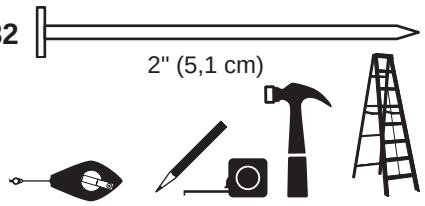

8 Secure all roof panels with 2" nails spaced 6" apart and 12" apart inside panels.

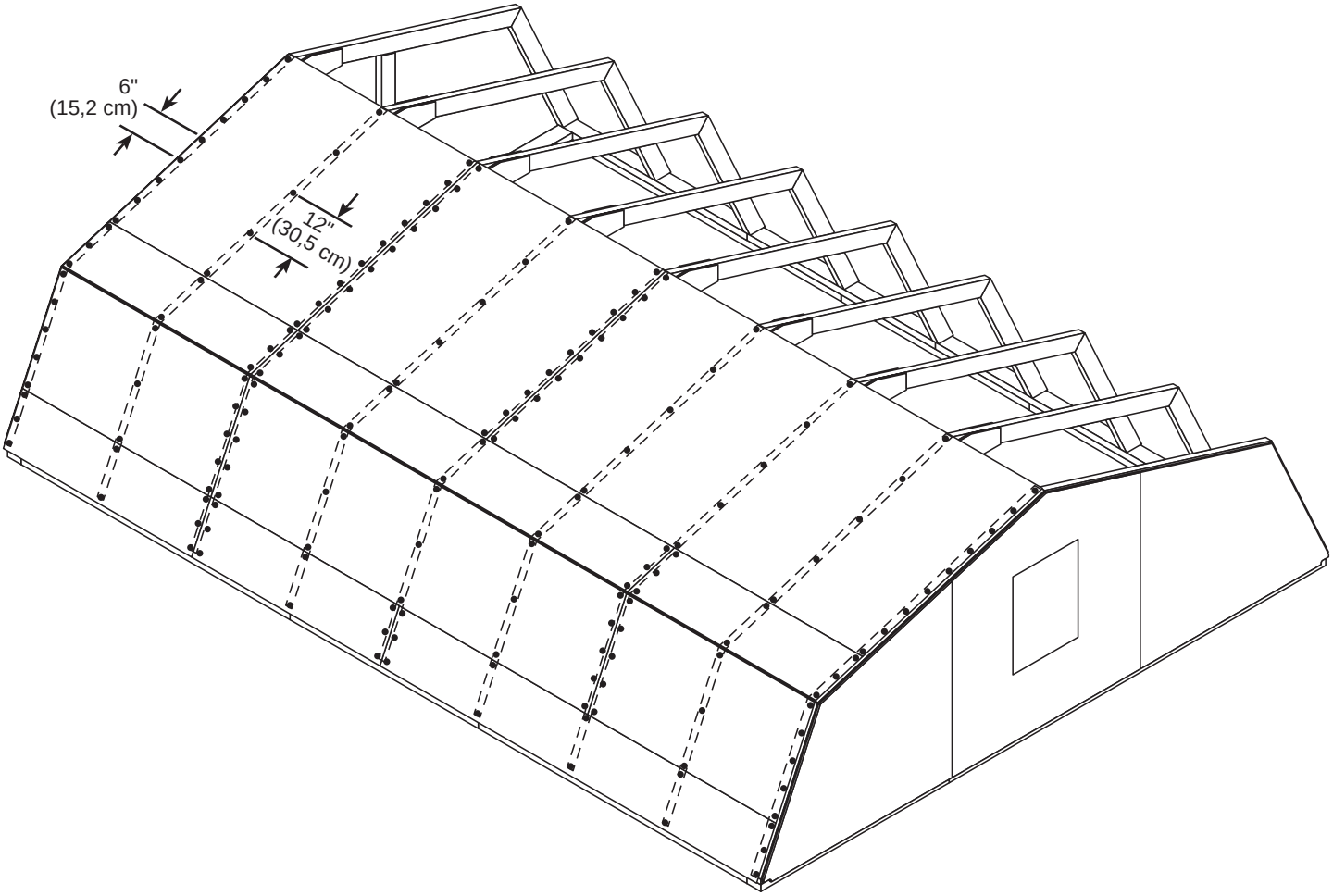

Repeat all steps to install roof panels on the opposite side.

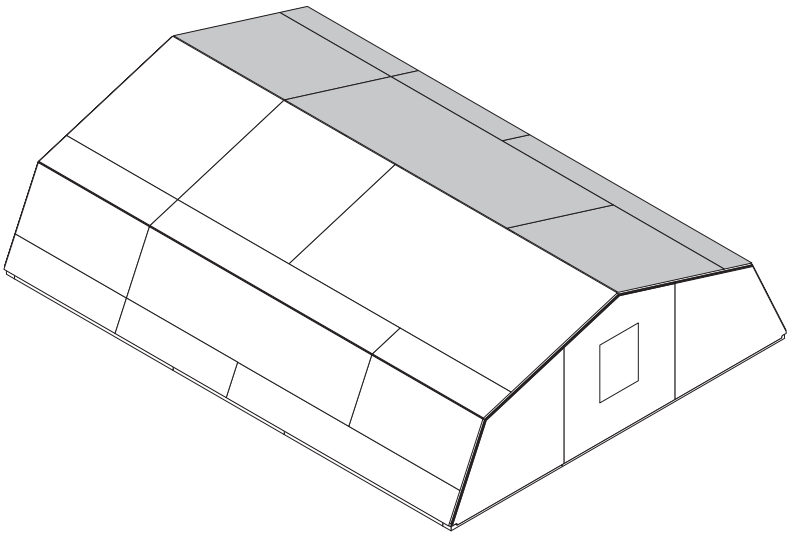

FINISH

Your roof panels are now installed.

12' x 20' ROOF PANELS

PARTS REQUIRED:

x1 — 48 x 96" (121,9 x 243,8 cm)

GAA — 3/4" GAUGE BLOCK

x4 — 2" (5,1 cm)

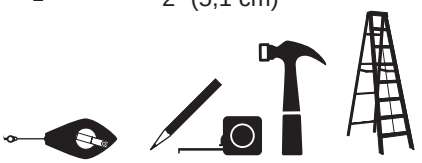

Roof panels may cause serious injury until securely fastened.
Note: Install all roof panels with the rough side up (painted grid lines).

BEGIN

1

Place the **48" x 96"** panel on rafters with a 3/4" measurement on the rafter **(Fig A)** and the panel flush at the peak **(Fig. B)**.

Secure panel with (1) 2" nail in each corner.

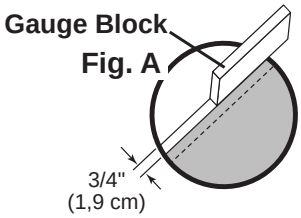

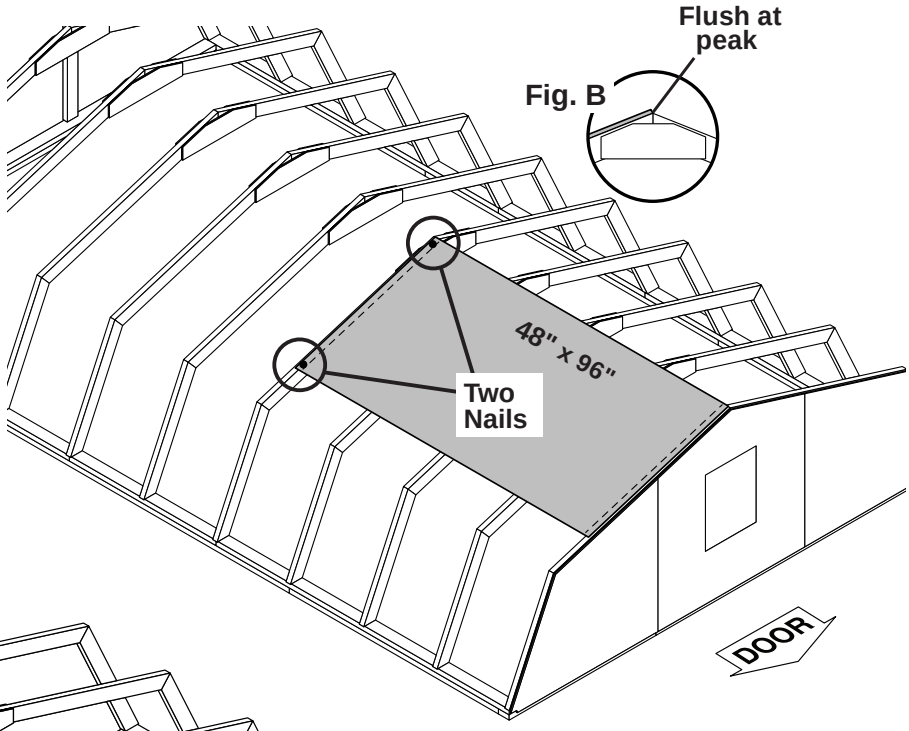

2

Move to the opposite end. Using the long edge of the panel as a lever, move the panel side-to-side until the top corner is flush to the peak **(Fig. B)**.

Move gable end rafter edge until it is 1/2" from the panel **(Fig. C)**.

Secure panel with (1) 2" nail in each corner.

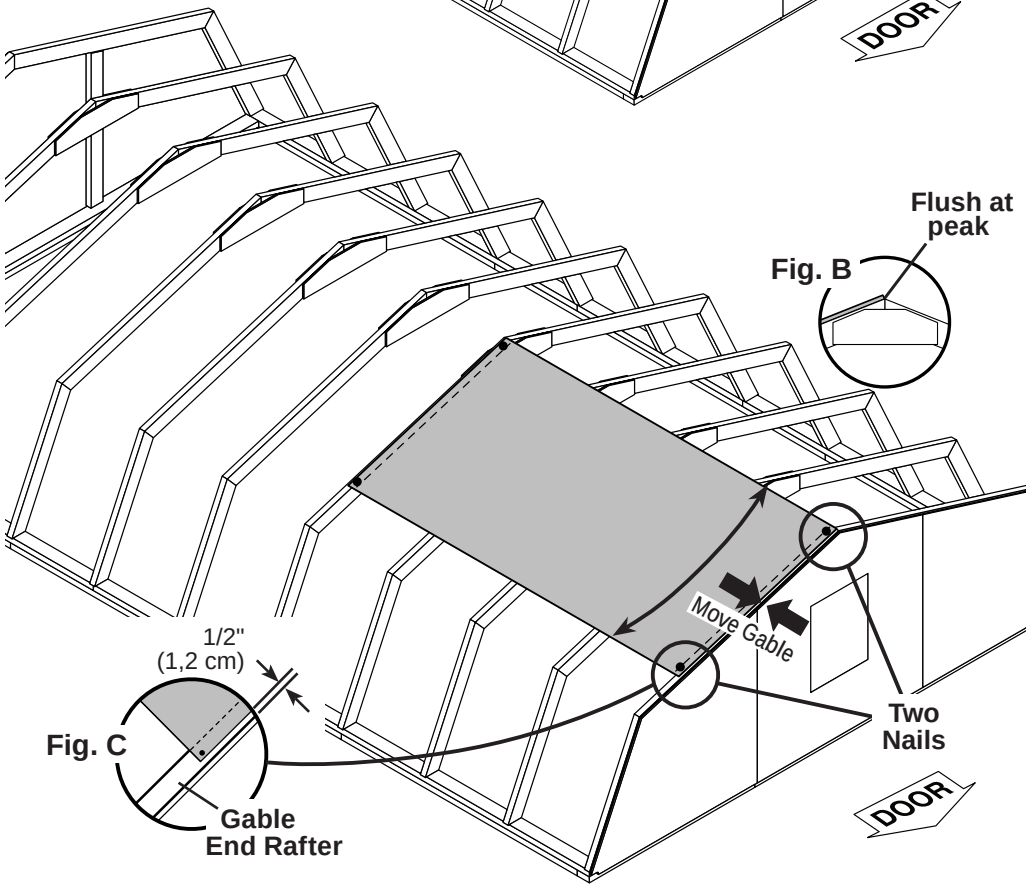

12' x 20' ROOF PANELS

PARTS REQUIRED:



x1 48 x 96" (121,9 x 243,8 cm)

x1 47-7/8 x 48" (121,6 x 121,9 cm)

x22 2" (5,1 cm)

3

Install next **47-7/8" x 96"** roof panel flush to the installed panel and flush at the peak.
Secure panel with (1) 2" nail in each corner.

Move to the opposite end.
Using the unattached end of the panel as a lever, move the panel side-to-side until the top corner is flush to the peak **(Fig. B)** and there is a 3/4" measurement on the rafter **(Fig A)**.
Finish securing panel with (1) 2" nail in each corner.

4

Install 4**8" x 96"** roof panel flush to the installed panel and flush at the peak **(Fig. B)**.
Secure panel with (1) 2" nail in each corner.

Move gable end rafter edge until it is 1/2" from the 2nd 4**8" x 48"** roof panel **(Fig. C)**.
Finish securing panel with (1) 2" nail in each corner.

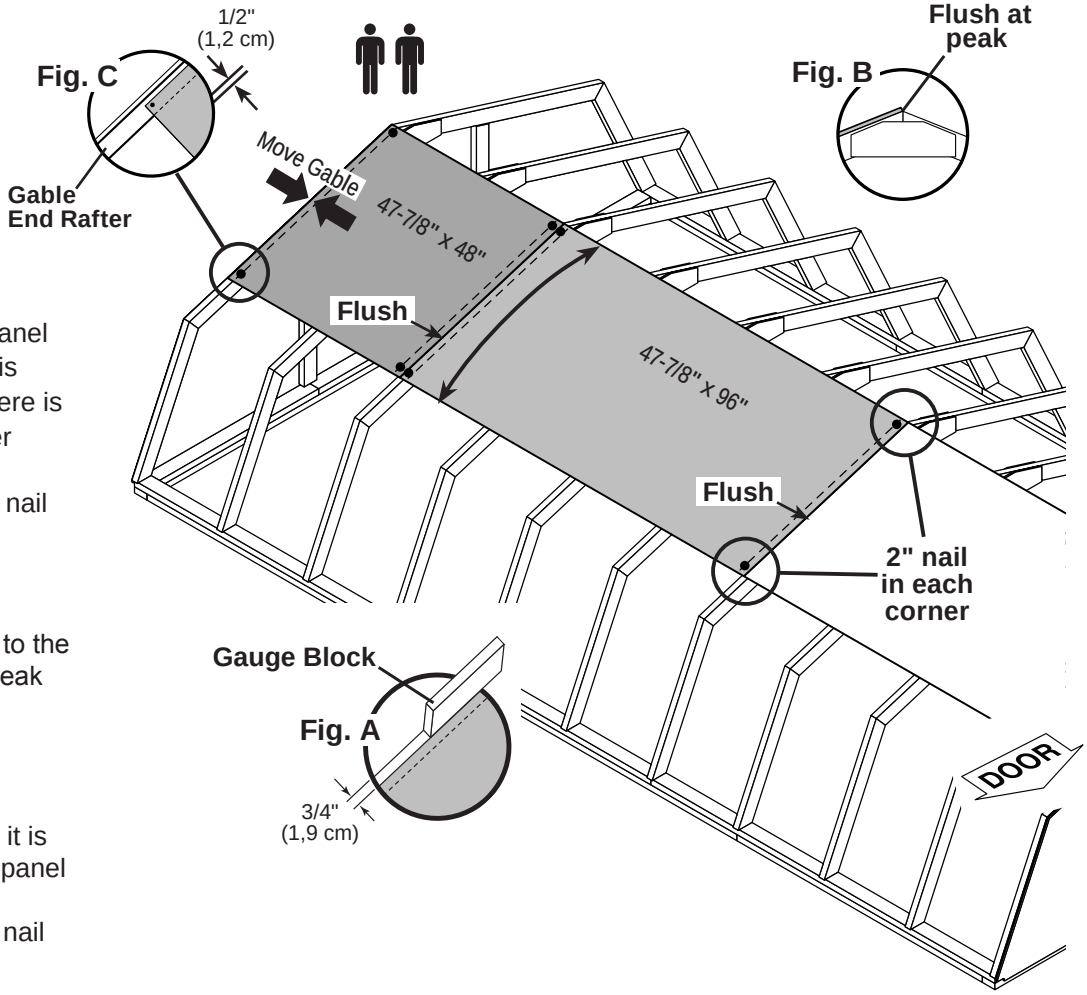

5

Maintain spacing between the center of the rafters at the lower edge of the panels **(Fig. D)**.
Secure panels with (1) 2" nail into each rafter, as shown.
Move to the top of the panel and keep spacing between the center of the rafters.
Secure panels with (1) 2" nail into each rafter.

Fig. D

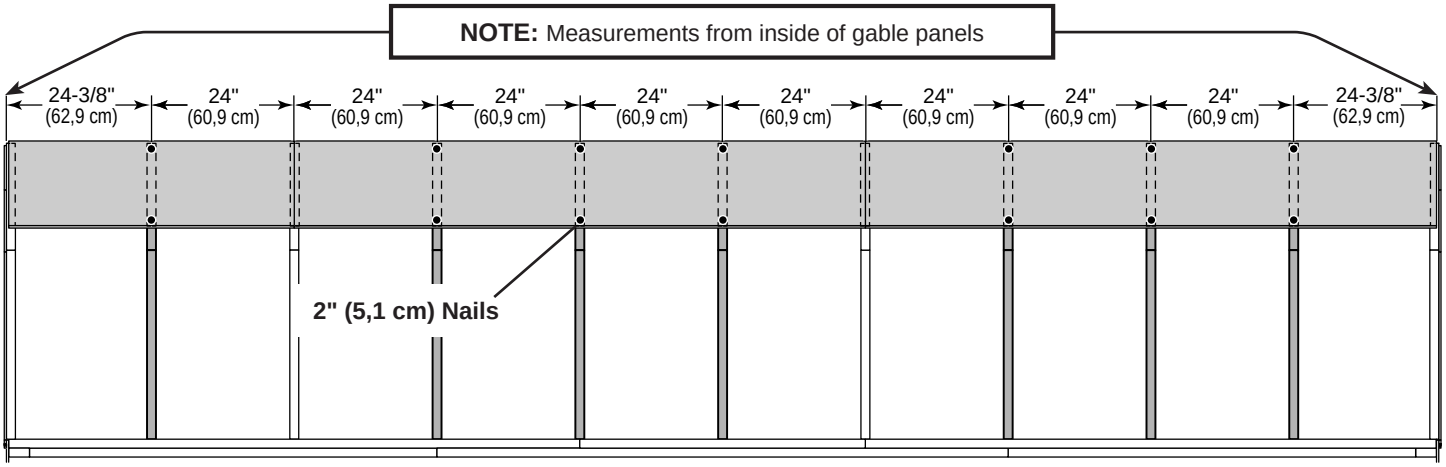

12' x 20' ROOF PANELS

PARTS REQUIRED:

x2 — 23-7/8" x 96" (60,6 x 243,8 cm)

x1 — 23-7/8" x 48" (60,6 x 121,9 cm)

x2 — 12-1/2" x 96" (31,8a cm x 243,8 cm)

x2 — 11-7/8" x 96" (30,2 cm x 243,8 cm)

x1 — 11-7/8" x 48" (30,2 cm x 121,9 cm)

x1 — 12-1/2" x 48" (31,8 cm x 121,9cm)

x36 — 2" (5,1 cm)

GAA

3/4" GAUGE BLOCK



6 Next, install front **12-1/2" x 48"** and **12-1/2" x 96"** roof panels with a 3/4" measurement on the rafter **(Fig A)**, and flush to the installed panels **(Fig. E)**.

Secure panels with (1) 2" nail in each corner.

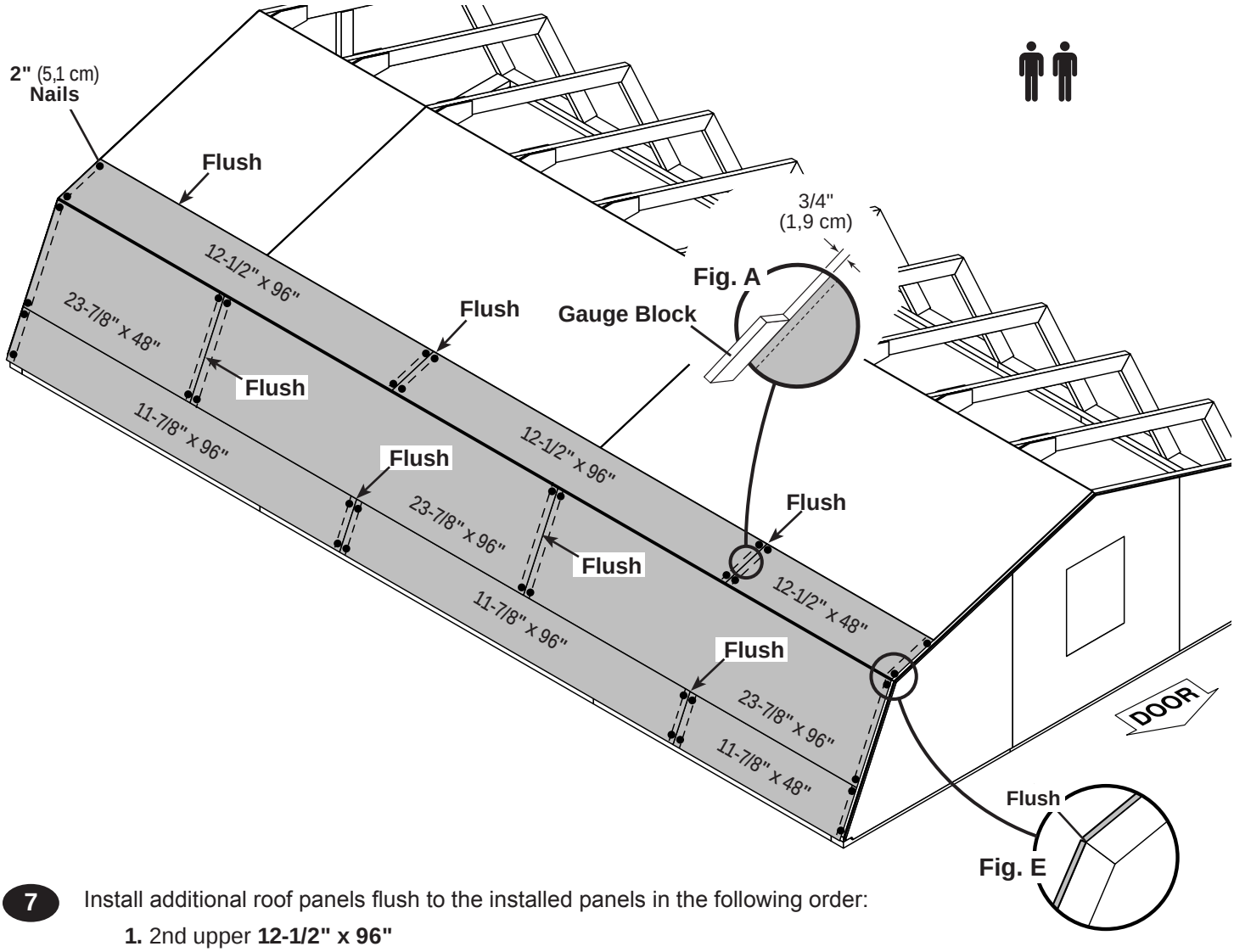

7 Install additional roof panels flush to the installed panels in the following order:

1. 2nd upper **12-1/2" x 96"**

2. 23-7/8" x 96", 2nd **23-7/8" x 96"** and **23-7/8" x 48" (Fig. E)**

3. 11-7/8" x 48", **11-7/8" x 96"** and 2nd **11-7/8" x 96"**

Install roof panels with a 3/4" measurement on the rafter **(Fig A)**.

Secure panels with (1) 2" nail in each corner.

12' x 20' ROOF PANELS

PARTS REQUIRED:

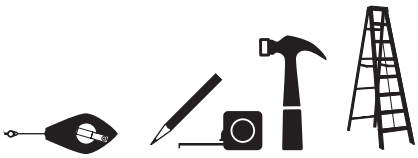

x346

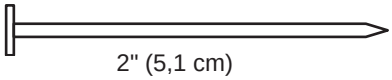

2" (5,1 cm)

8 Secure all roof panels with 2" nails spaced 6" apart and 12" apart inside panels.

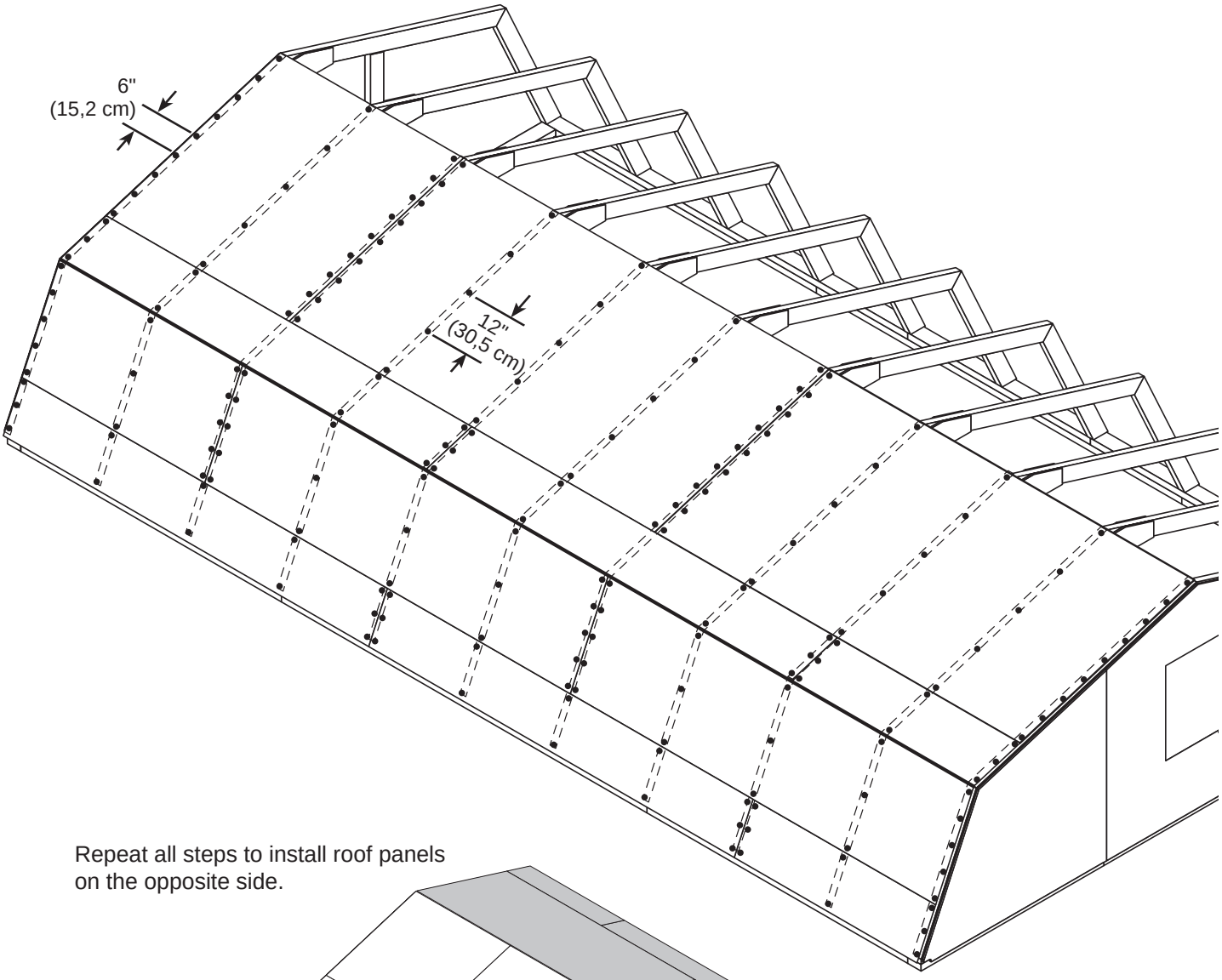

Repeat all steps to install roof panels on the opposite side.

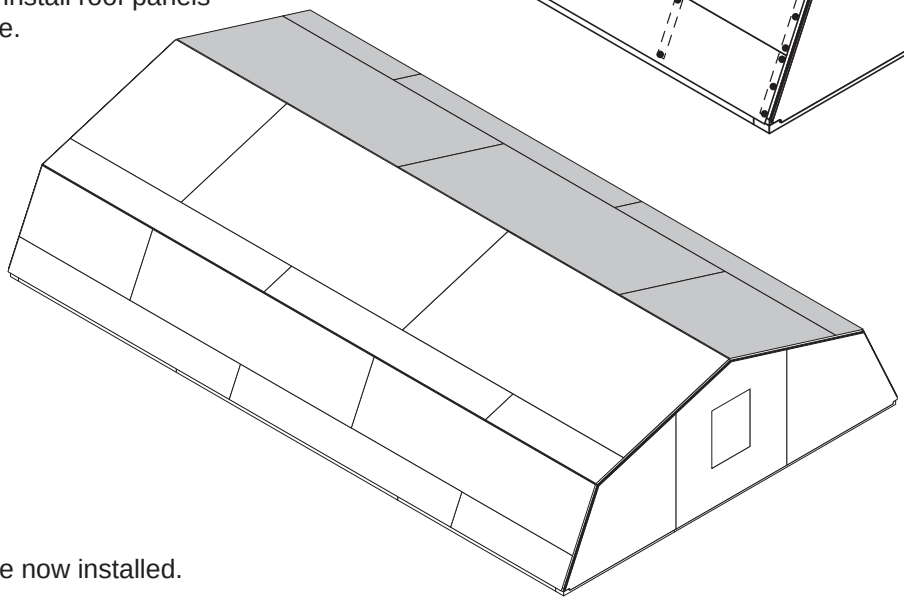

FINISH

Your roof panels are now installed.

12' x 24' ROOF PANELS

PARTS REQUIRED:

x1 — 48 x 96" (121,9 x 243,8 cm)

GAA — 3/4" GAUGE BLOCK

x4 — 2" (5,1 cm)

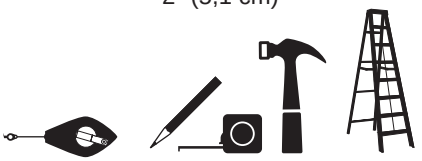

Roof panels may cause serious injury until securely fastened.

Note: Install all roof panels with the rough side up (painted grid lines).

BEGIN

1

Place the **48" x 96"** panel on rafters with a 3/4" measurement on the rafter **(Fig A)** and the panel flush at the peak **(Fig. B)**.

Secure panel with (1) 2" nail in each corner.

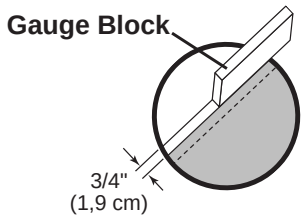

Fig. A

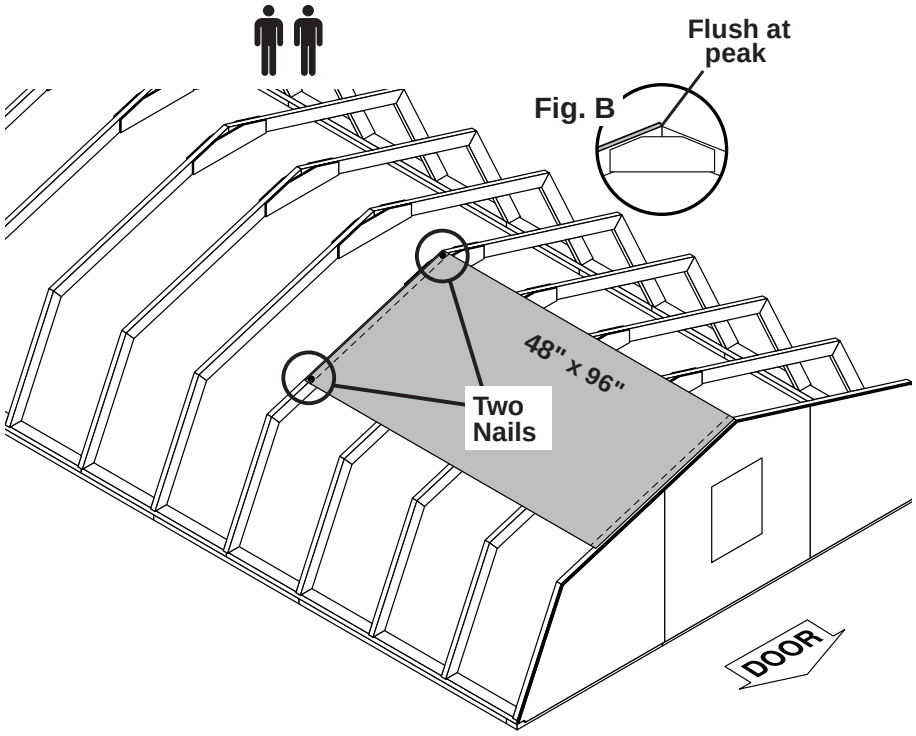

2

Move to the opposite end. Using the long edge of the panel as a lever, move the panel side-to-side until the top corner is flush to the peak **(Fig. B)**.

Move gable end rafter edge until it is 1/2" from the panel **(Fig. C)**.

Secure panel with (1) 2" nail in each corner.

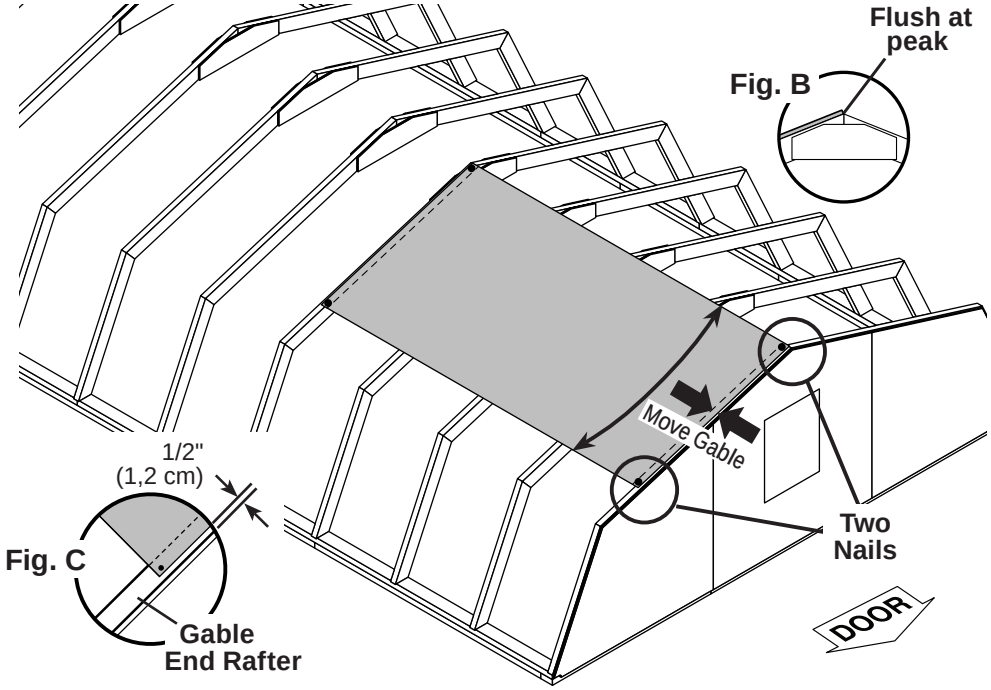

12' x 24' ROOF PANELS

PARTS REQUIRED:



x1 — 48 x 96" (121,9 x 243,8 cm)

x2 — 47-7/8 x 48" (121,6 x 121,9 cm)

x28 — 2" (5,1 cm)

3

Install 2nd **47-7/8" x 96"** roof panel flush to the installed panel, and flush at the peak **(Fig. B)**.
Secure panel with (1) 2" nail in each corner.

Move to the opposite end. Using the unattached end of the panel as a lever, move the panel side-to-side until the top corner is flush to the peak **(Fig. B)** and there is a 3/4" measurement on the rafter **(Fig A)**.
Finish securing panel with (1) 2" nail in each corner.

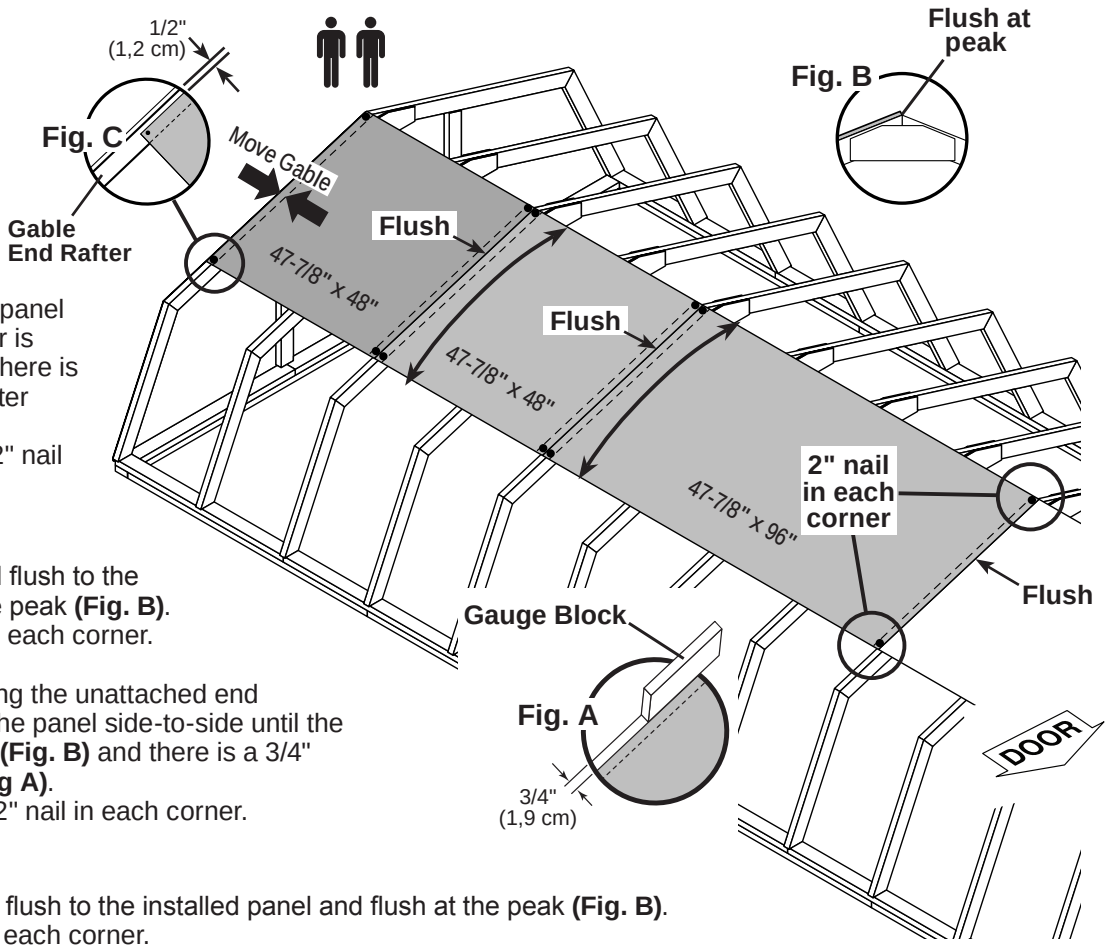

4

Install **47-7/8" x 48"** roof panel flush to the installed panel and flush at the peak **(Fig. B)**.
Secure panel with (1) 2" nail in each corner.

Move to the opposite end. Using the unattached end of the panel as a lever, move the panel side-to-side until the top corner is flush to the peak **(Fig. B)** and there is a 3/4" measurement on the rafter **(Fig A)**.
Finish securing panel with (1) 2" nail in each corner.

5

Install **47-7/8" x 48"** roof panel flush to the installed panel and flush at the peak **(Fig. B)**.
Secure panel with (1) 2" nail in each corner.

Move gable end rafter edge until it is 1/2" from the 2nd 4**8" x 48"** roof panel **(Fig. C)**.
Finish securing panel with (1) 2" nail in each corner.

6

Maintain spacing between the center of the rafters at the lower edge of the panels **(Fig. D)**.
Secure panels with (1) 2" nail into each rafter, as shown.
Move to the top of the panel and keep spacing between the center of the rafters.
Secure panels with (1) 2" nail into each rafter.

Fig. D

NOTE: Measurements from inside of gable panels

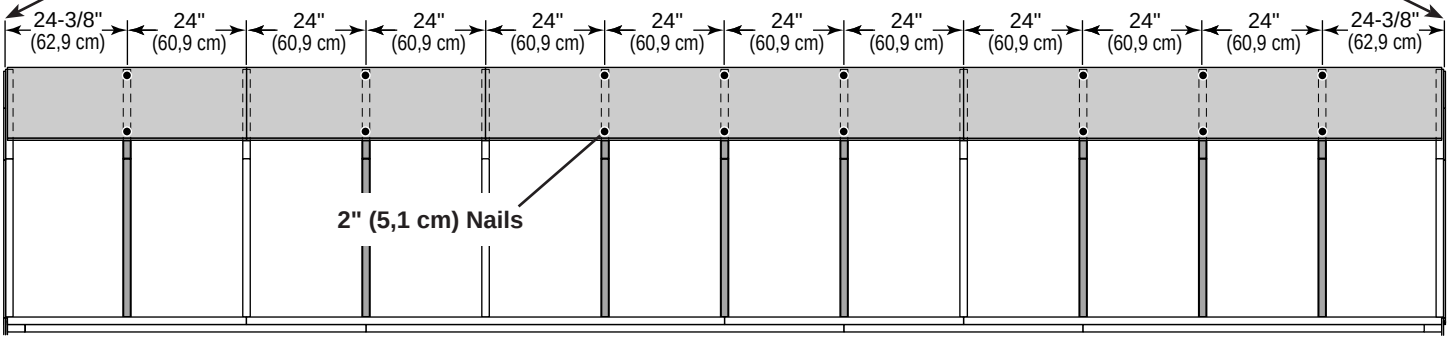

12' x 24' ROOF PANELS

PARTS REQUIRED:

x1 — 23-7/8" x 96" (60,6 x 243,8 cm)

x2 — 23-7/8" x 48" (60,6 x 121,9 cm)

x1 — 12-1/2" x 96" (31,8a cm x 243,8 cm)

x1 — 11-7/8" x 96" (30,2 cm x 243,8 cm)

x2 — 11-7/8" x 48" (30,2 cm x 121,9 cm)

x2 — 12-1/2" x 48" (31,8 cm x 121,9cm)

x48 — 2" (5,1 cm)

GAA

3/4" GAUGE BLOCK



7 Install front **12-1/2" x 48"** and **12-1/2" x 96"** roof panels with a 3/4" measurement on the rafter **(Fig A)**, and flush to the installed panels **(Fig. E)**.

Secure panels with (1) 2" nail in each corner.

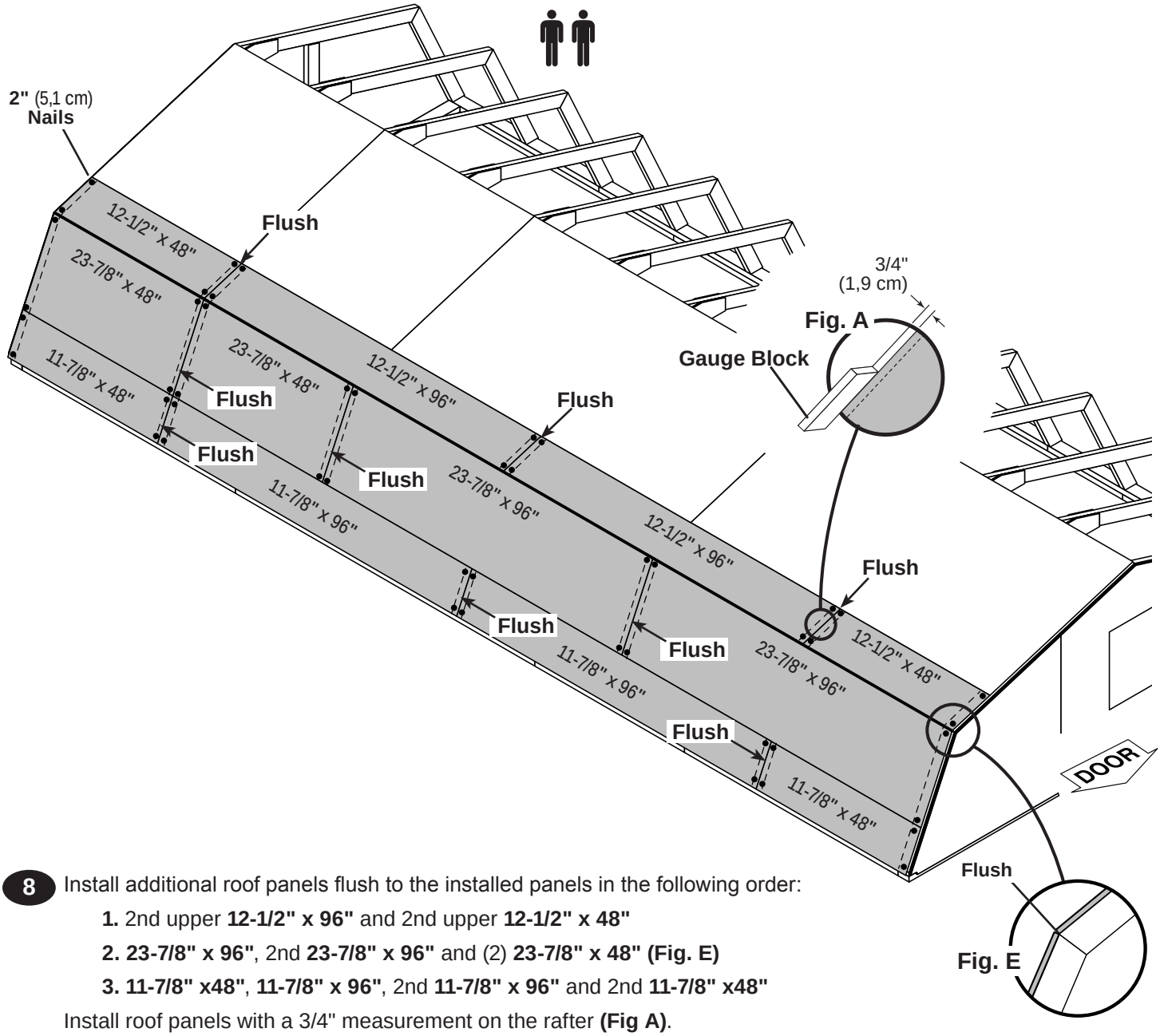

8 Install additional roof panels flush to the installed panels in the following order:

1. 2nd upper **12-1/2" x 96"** and 2nd upper **12-1/2" x 48"**

2. 23-7/8" x 96", 2nd **23-7/8" x 96"** and (2) **23-7/8" x 48" (Fig. E)**

3. 11-7/8" x48", **11-7/8" x 96"**, 2nd **11-7/8" x 96"** and 2nd **11-7/8" x48"**

Install roof panels with a 3/4" measurement on the rafter **(Fig A)**.

Secure panels with (1) 2" nail in each corner.

12' x 24' ROOF PANELS

PARTS REQUIRED:

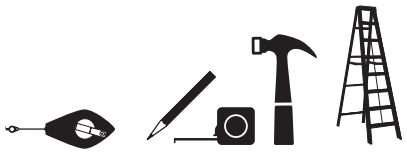

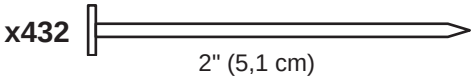

9 Secure all roof panels with 2" nails spaced 6" apart and 12" apart inside panels.

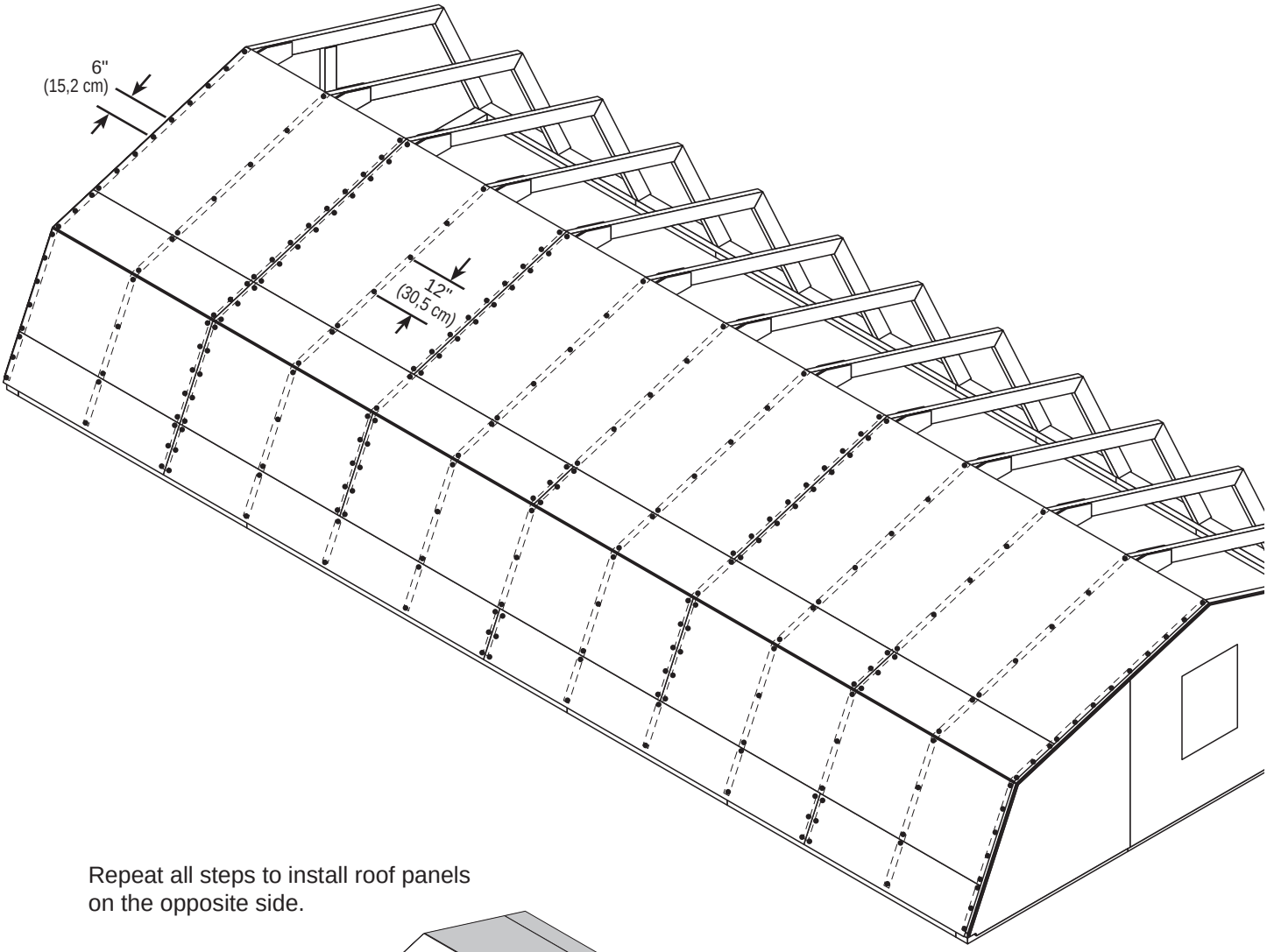

Repeat all steps to install roof panels on the opposite side.

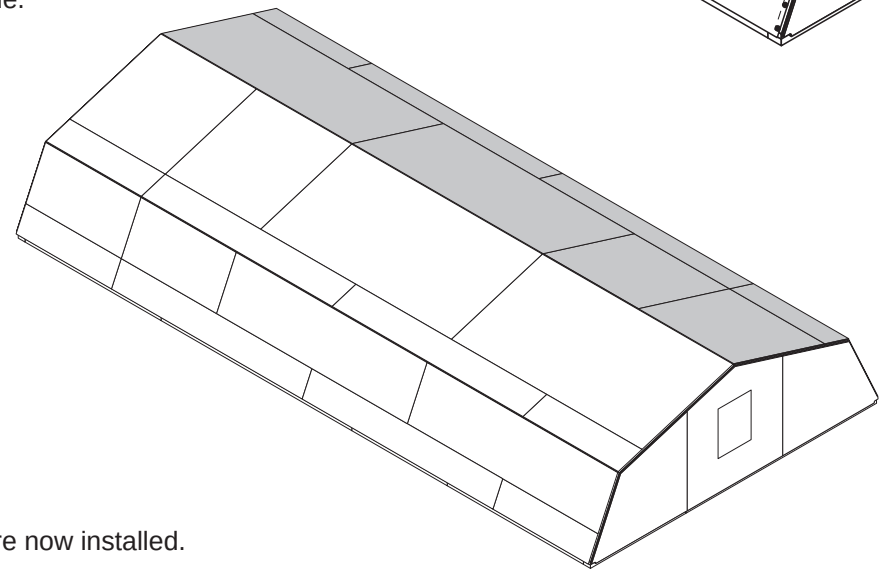

FINISH

Your roof panels are now installed.

GABLE TRIM

PARTS REQUIRED:

x88 — 2" (5,1 cm)

x2 **ZOL** — 5/8 x 4 x 60-7/8" (1,6 x 10 x 154,6 cm)

x2 **ZOR** — 5/8 x 4 x 60-7/8" (1,6 x 10 x 154,6 cm)

x2 **ZJL** — 5/8 x 4 x 36" (1,6 x 10 x 91 cm)

x2 **ZJR** — 5/8 x 4 x 36" (1,6 x 10 x 91 cm)



BEGIN

1 Install upper gable trim **ZOR** and **ZOL** flush to top of roof panels and flush at peak. Secure trim with 2" finish nails evenly spaced, as shown.

2 Install lower gable trim **ZJR** and **ZJL** flush to top of roof panels and flush to installed trim. Secure trim with 2" finish nails evenly spaced, as shown.

Repeat steps to install trim to the opposite gable.

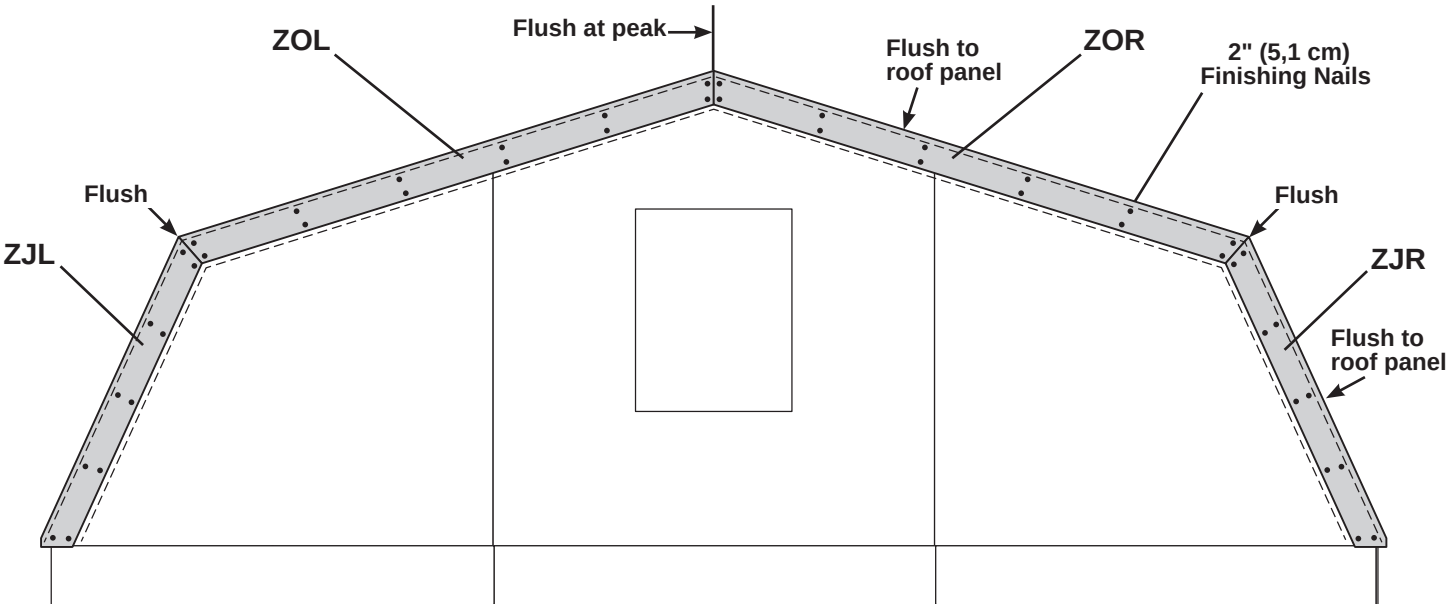

FINISH

Your gable trim is now installed.

CORNER TRIM

PARTS REQUIRED:

x64 2" (5,1 cm)

x8 3/8" x 1-3/4" x 83-1/4" (1 x 4,5 x 211,5 cm)

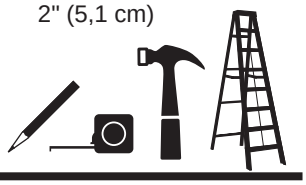

BEGIN

1 Install gable end **83-1/4"** corner trim under gable panel, **(Fig. A)** and flush to eave wall panel **(Fig. B)**. Secure with 2" finishing nails spaced evenly.

2 Install eave side **83-1/4"** corner trim flush to eave soffit and flush along seam of installed corner trim **(Fig. C)**. Secure with 2" finishing nails spaced evenly.

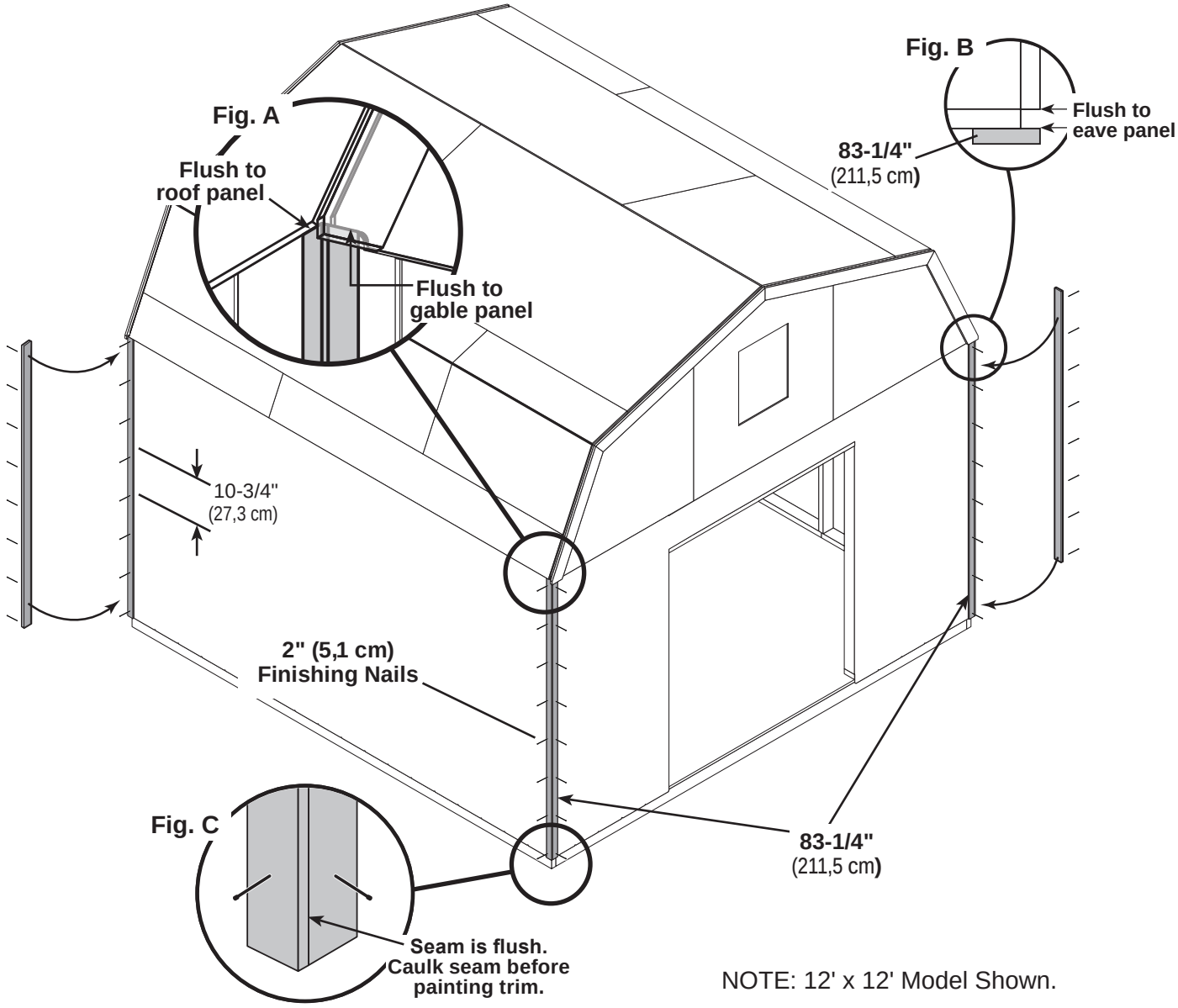

NOTE: 12' x 12' Model Shown.

Repeat STEPS 1 - 2 for each corner of shed.

FINISH

Your corner trim is now installed.

COLLAR TIES

PARTS REQUIRED:

x2 **SX**
2 x 4 x 60" (5,1 x 10,2 x 152,4 cm)

x2 *OSB*
7/16 x 3-1/2 x 24" (1,1 x 8,9 x 61 cm)

x24
2" (5,1 cm)

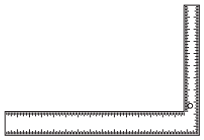



BEGIN

1 Arrange (2) **SX** end-to-end on flat surface, flush in middle.
Center collar tie gusset *OSB* on top of **SX** boards.

Fasten together with 2" nails in the pattern shown.

2 Flip collar tie assembly over and nail as shown on the other side.

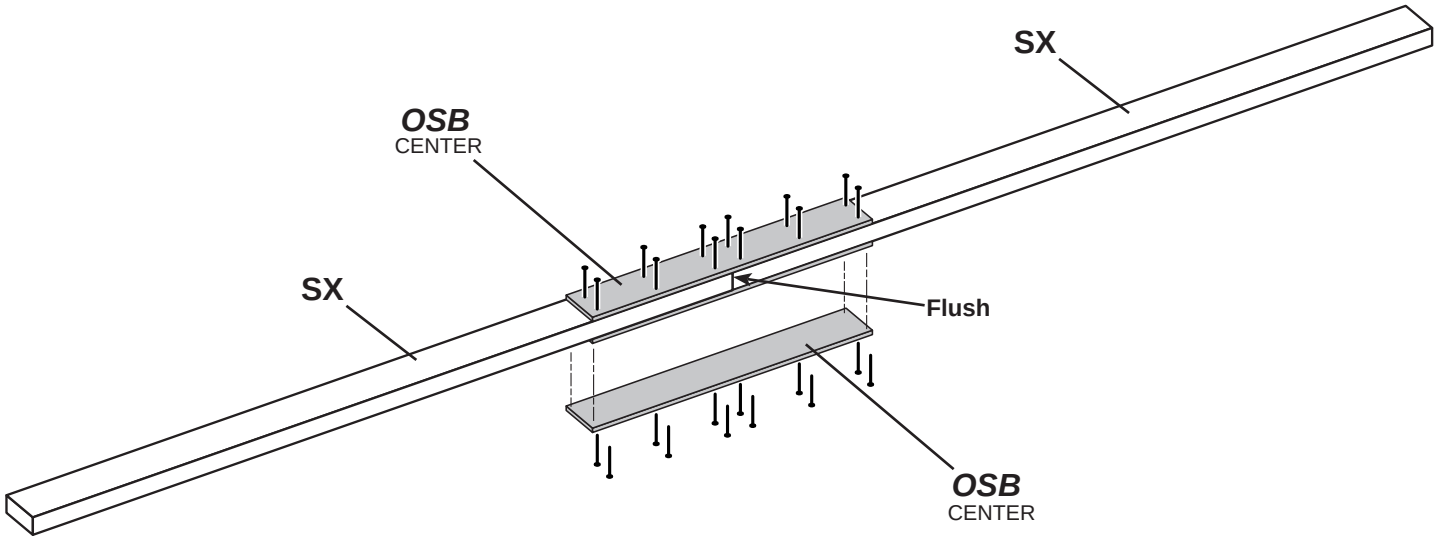

3 Build more collar ties for the building sizes listed:

12' x 12' = x1
12' x 16' = x2
12' x 20' = x3
12' x 24' = x4

FINISH

Your collar tie is now assembled.

COLLAR TIE INSTALLATION

PARTS REQUIRED:





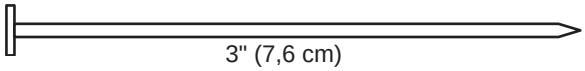

12x12'	12x16'	12x20'	12x24'
x1	x2	x3	x4
x6	x12	x18	x24

BEGIN

1 Install collar tie to the rafter with (3) 3" nails at each end **(Fig. A)**.

Starting at the wall with the door,
install first collar tie on the 2nd rafter from the wall
and then on ***every other*** rafter, as shown.



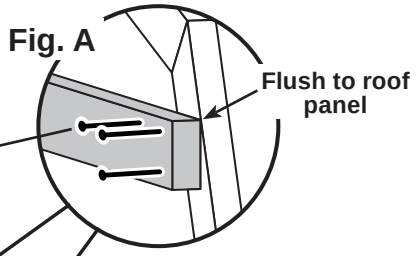



HINT:
For best appearance, install
collar ties on back side of rafter.

12' x 12'

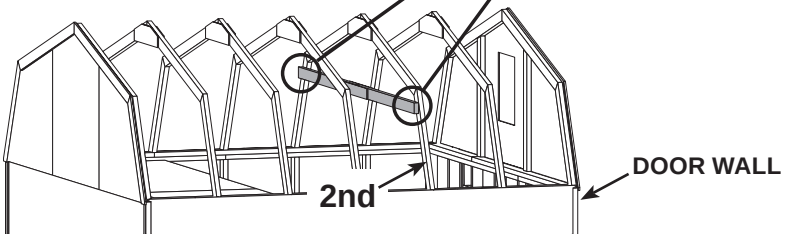

12' x 16'

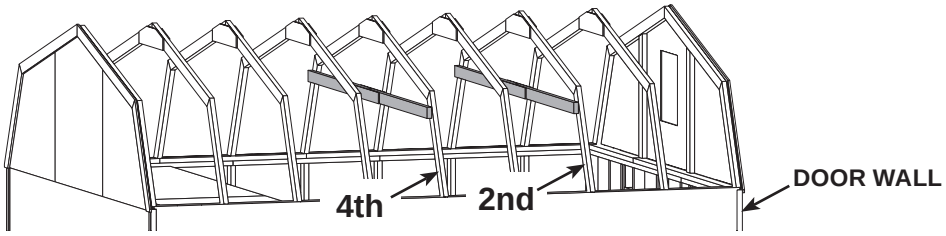

12' x 20'

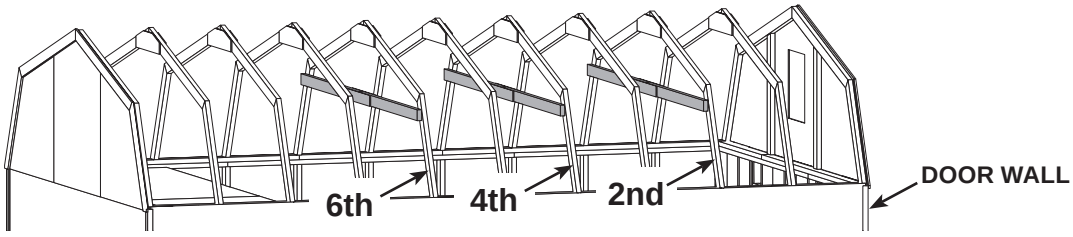

12' x 24'

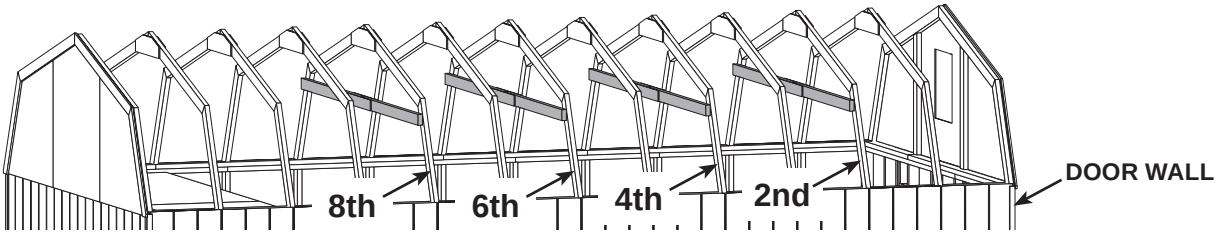

FINISH

Your collar tie(s) are now installed.

LOFT JOISTS

PARTS REQUIRED:

x4 **SP**
2 x 4 x 48" (5,1 x 10,2 x 121,9 cm)

x4 **TP**
2 x 4 x 96" (5,1 x 10,2 x 243,8 cm)

x56

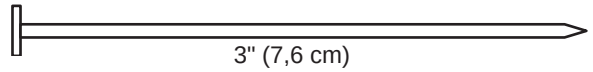



✓ **BEGIN**

1 Orient parts **TP** and **SP** on a flat surface.
Hold parts **TP** and **SP** flush and aligned.

Assemble joist with 3" nails in a staggered pattern.

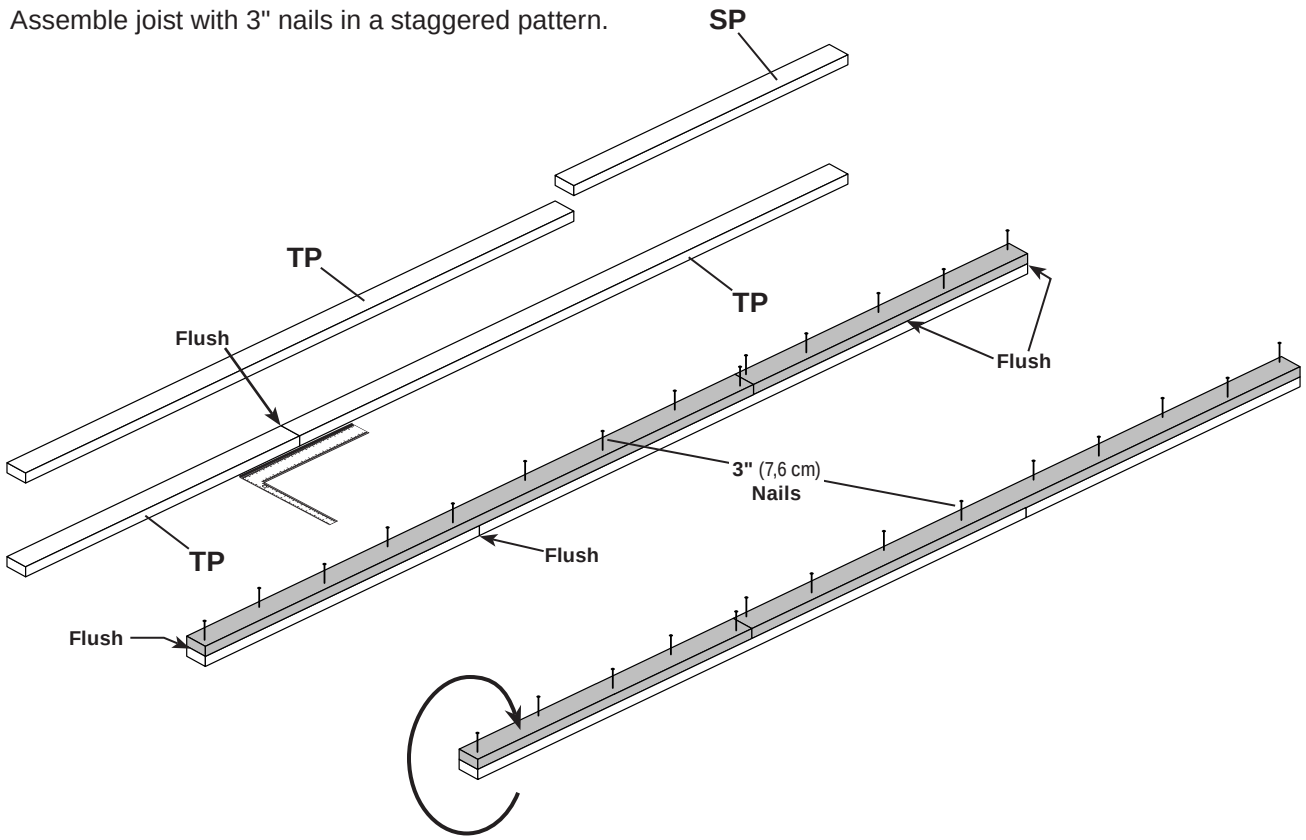

2 Turn assembled joist over and repeat staggered nail pattern.

3 Support joist and drill a 7/16" hole through each end **(Fig. A)**.

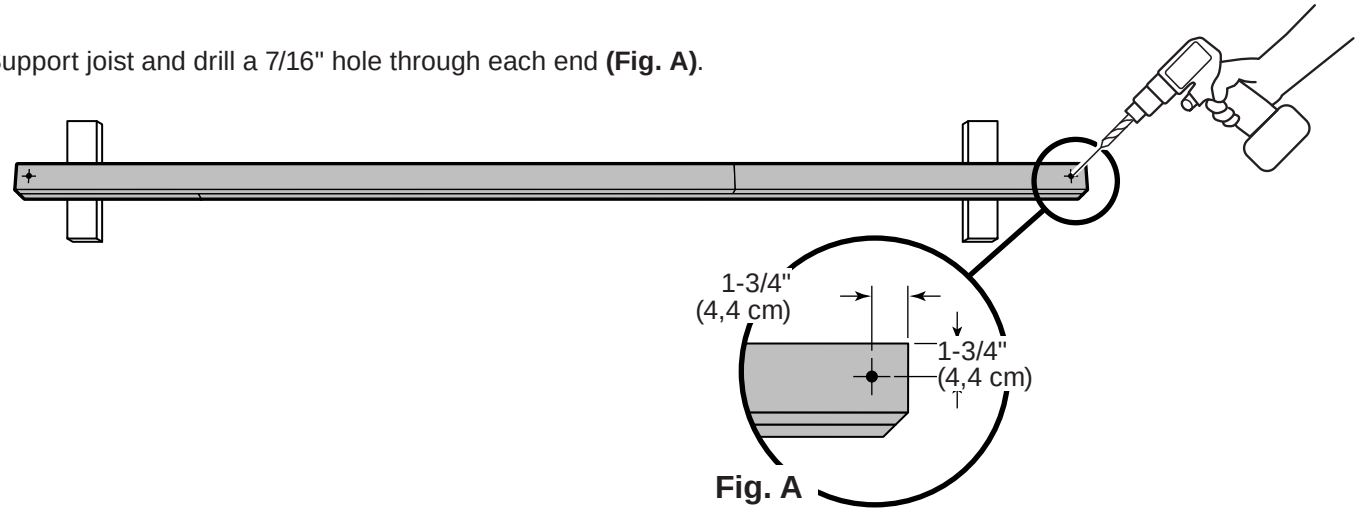

Fig. A

Repeat steps to build a second loft joist.

LOFT JOIST INSTALLATION

PARTS REQUIRED:

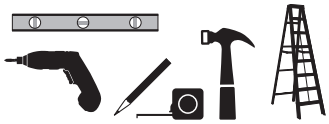

x16

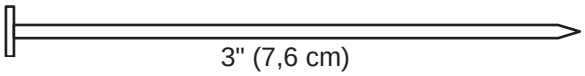

3" (7,6 cm)

x4

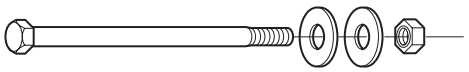

5-1/2" (14 cm) Hex bolt,
2 washers and locknut

x1 NK
2 x 3 x 48" (5,1 x 7,6 x 121,9 cm)

x1 PT
2 x 3 x 96" (5,1 x 7,6 x 243,8 cm)

x2 LOFT JOIST ASSEMBLY

BEGIN

1 Install **LW** and **PT** flush to bottom of top plate and flush at seam.
Secure with (2) 3" nails at wall studs and (4) 3" nails at seam.

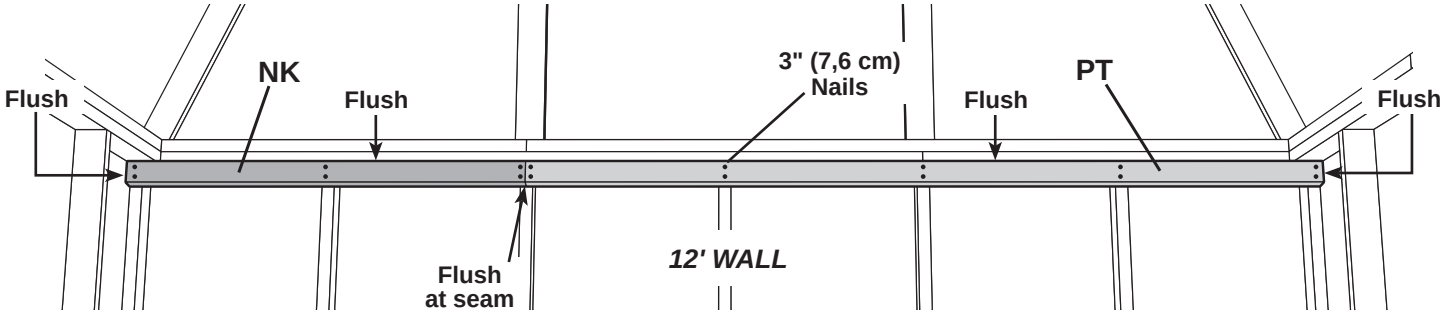

2 Clamp or hold joist assembly in place flush to top plate and flush against wall stud.
Drill through wall stud with 7/16" drill bit using hole in joist assembly as a guide.

3 Line up holes of joist assembly with holes in studs.
Secure joist with (2) hex bolts, flat washers and lock nuts at both sides **(Fig. A)**.

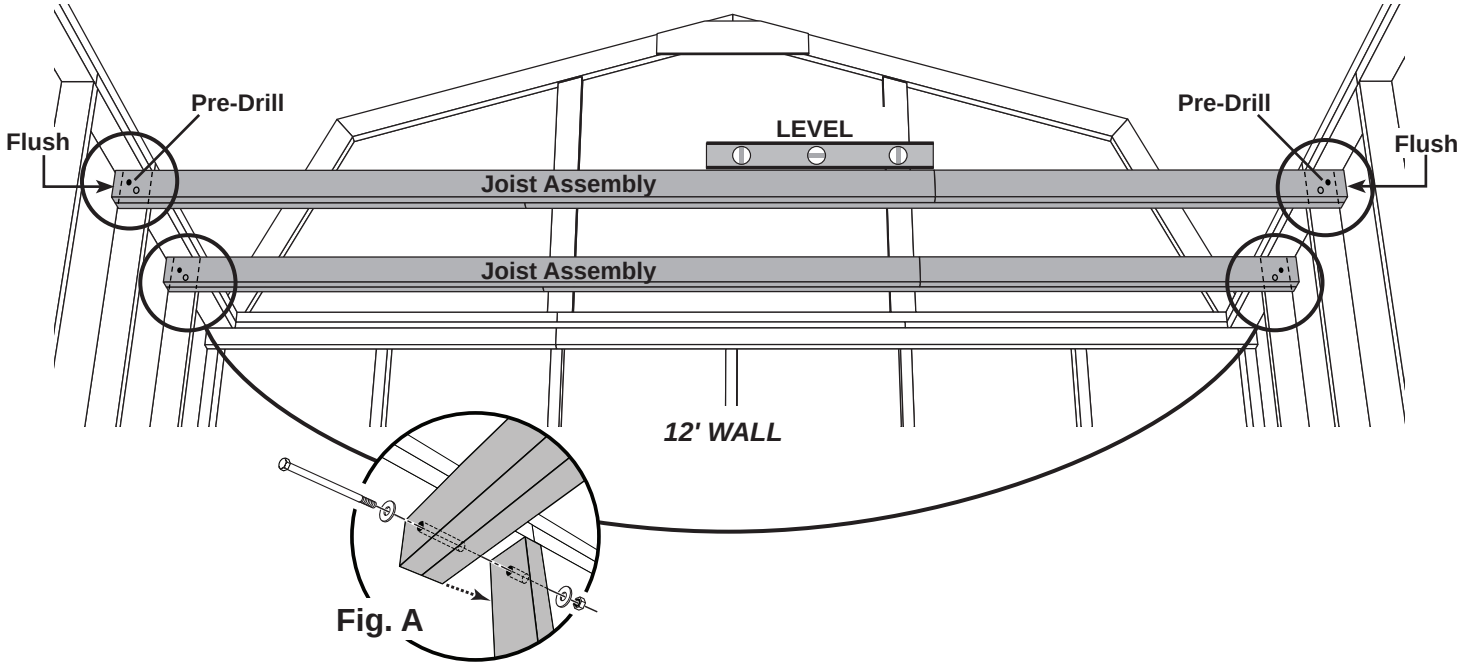

Fig. A

Repeat STEPS 2 - 3 to install second loft joist at the 2nd stud from the 12' wall.

FINISH

Your loft support and joists are now installed.

LOFT PANELS

PARTS REQUIRED:

x51

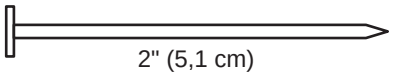

2" (5,1 cm)

x1

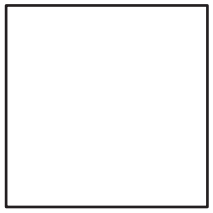

40-7/8" x 48" (103,8 x 121,9 cm)

x1



48" x 96" (60,6 x 121,9 cm)



BEGIN

1 Install loft panels over loft joists and ledger board.
Secure with 2" nails spaced 8" apart.

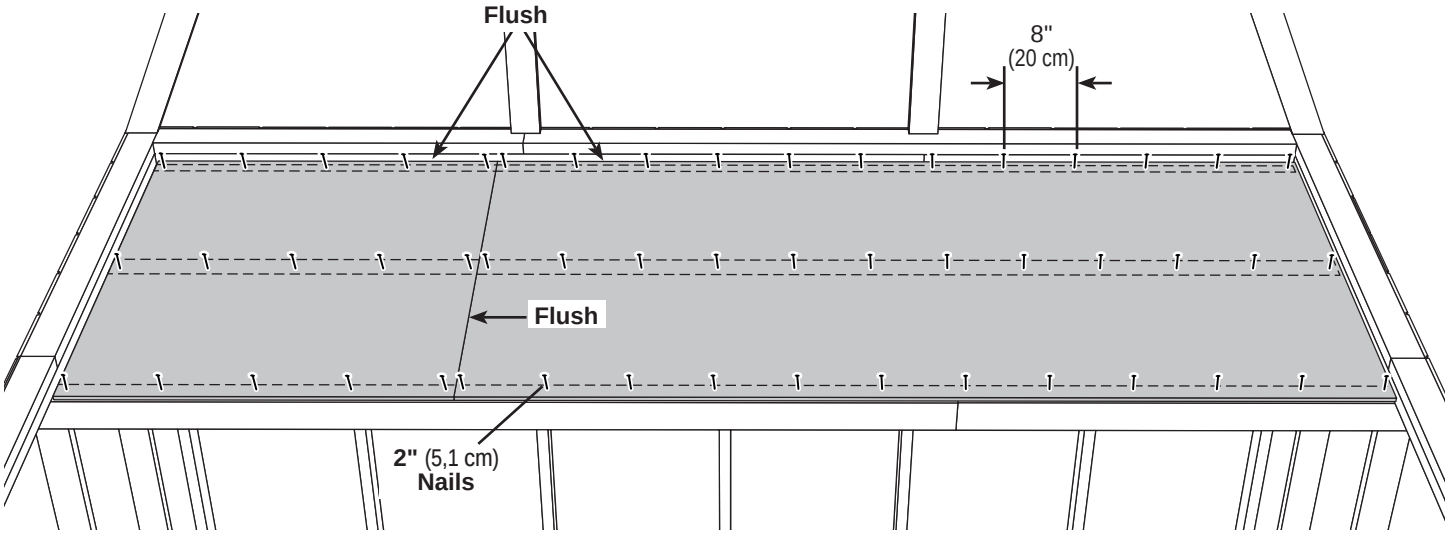

FINISH

Your loft is now completed.

DOORS

PARTS REQUIRED:

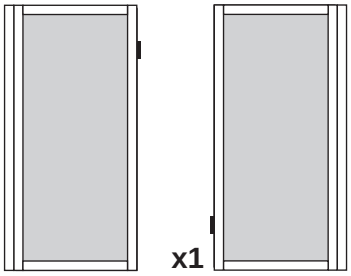

x1 Left Door

x1 Right Door

x4

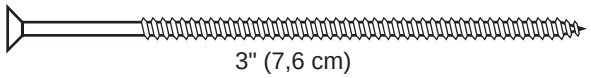

3" (7,6 cm)

x2

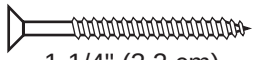

1-1/4" (3,2 cm)

x1 GAA

1 x 3 x 5" (2,5 x 7,6 x 12,7 cm)

x1 OO

69" (175,3 cm) Door Stiffener

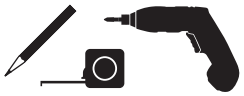

BEGIN

1 Place doors on flat surface. **3/8" offset is to top.**
Look for red (right) and green (left) on hinge board.

Attach temporary supports **OO** and **GAA** as shown.

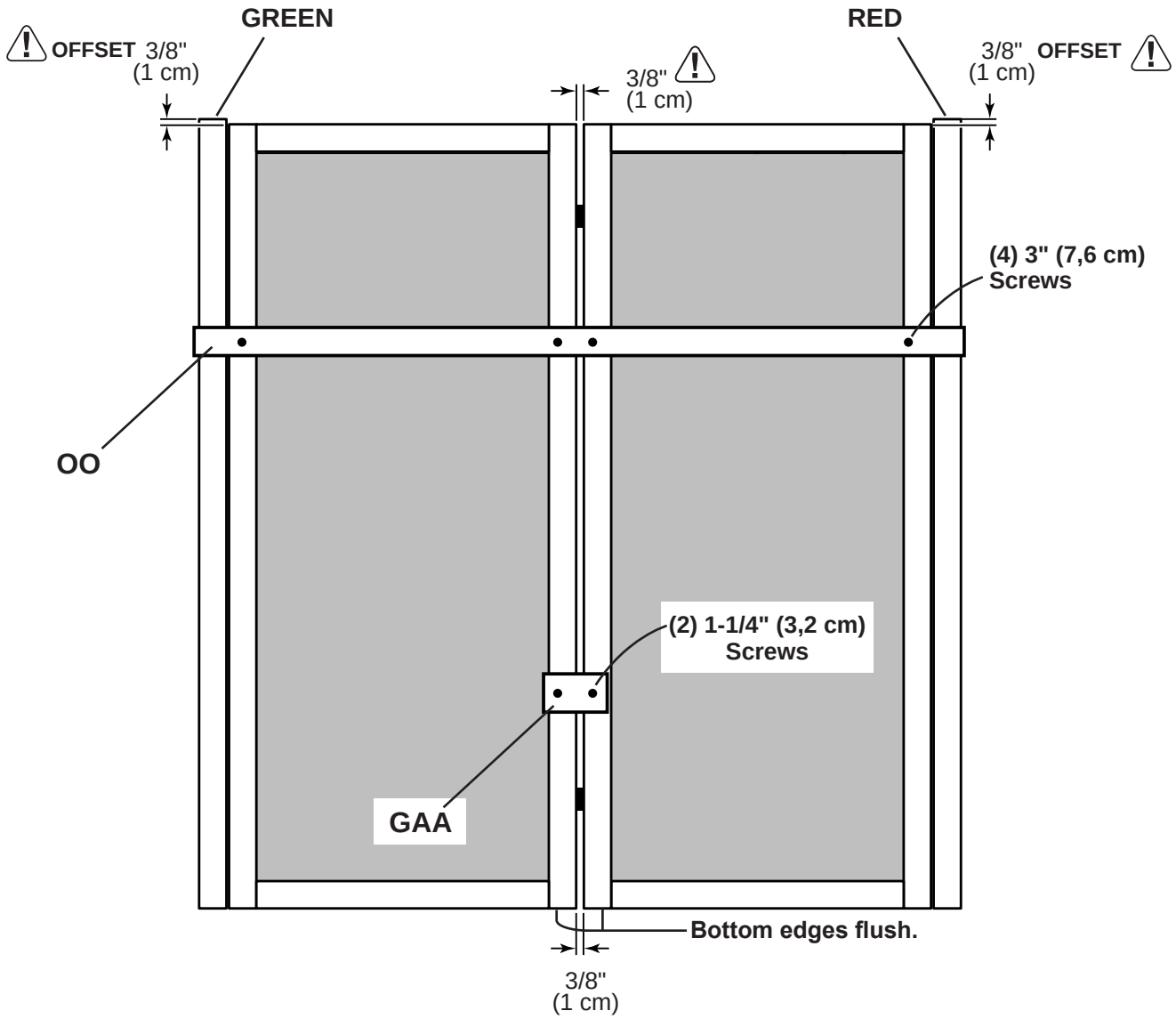

DOORS

PARTS REQUIRED:

x1 **OO** ***TEMPORARY SUPPORT***
69" (175,3 cm) Door Stiffener

x12
3" (7,6 cm)

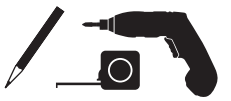

2 Install **OO** flush under panels.
Secure to floor frame with (2) 3" screws **(Fig. A)**.
Mark center of door opening.

Fig. A

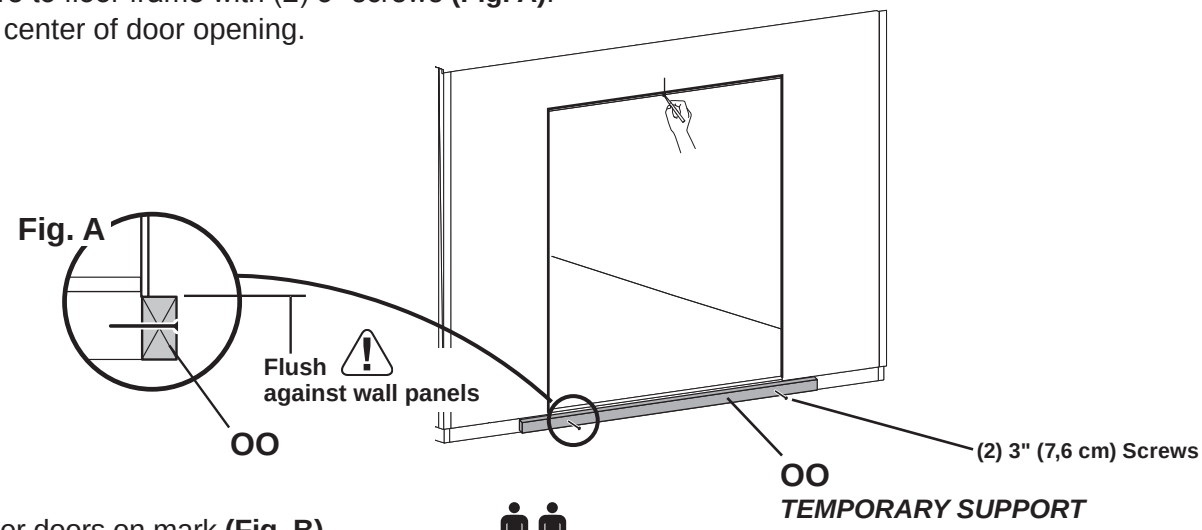

3 Center doors on mark **(Fig. B).**



4 Screw hinge boards into wall supports with (10) 3" screws, as shown.
⚠ **Make sure screws go into framing**.

Fig. B

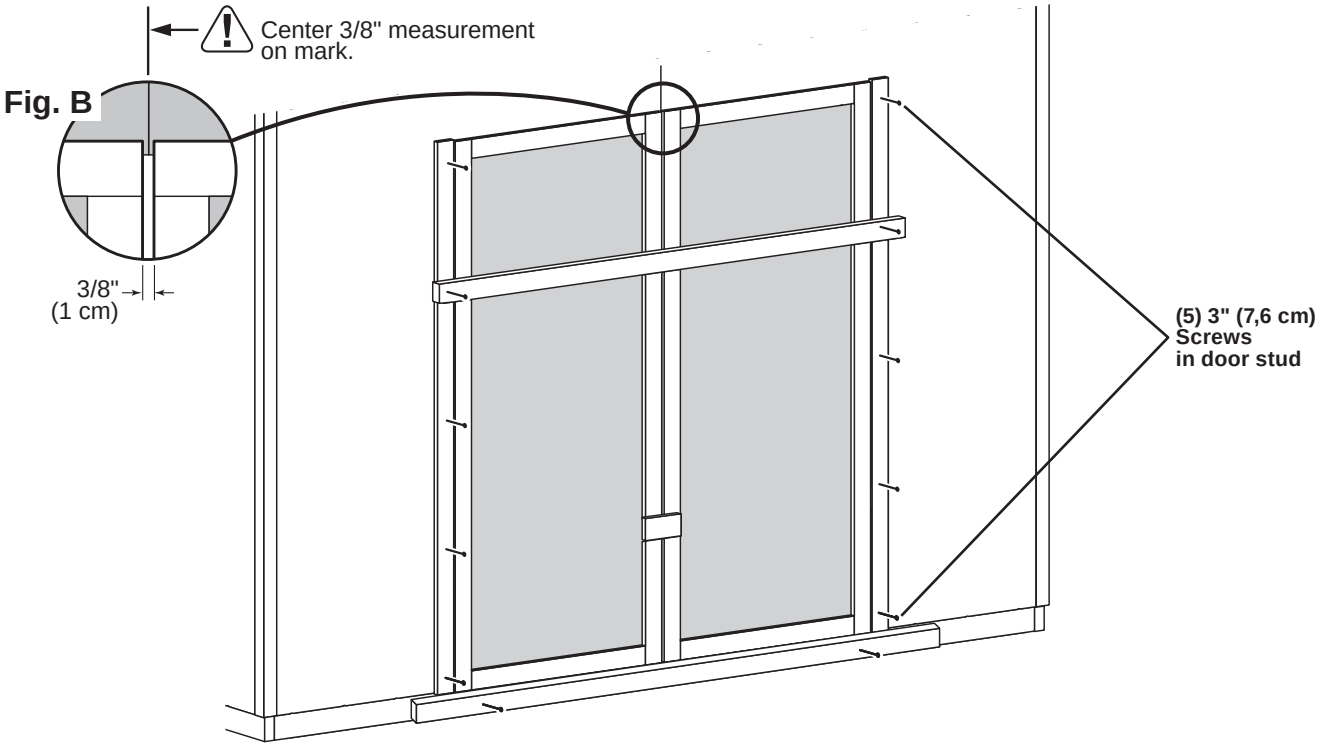

Remove temporary supports and check to make sure doors open and close properly.

FINISH
Your doors are now installed.

DOOR STIFFENERS

PARTS REQUIRED:

x2 **OO**
69" (175,3 cm) Door Stiffener

x14
2" (5,1 cm)



BEGIN

1 Center **OO** vertically on the left door in the doorway **(Fig. A)** overlapping 1" (2,5 cm) along the edge of door **(Fig. B)**.
Secure with (7) 2" screws through outside trim into **OO**.

2 Center **OO** vertically on the right door in the door opening offset 1" (2,5 cm) from the edge of door **(Fig. B)**.
Secure with (7) 2" screws through outside trim into **OO**.

Fig. A

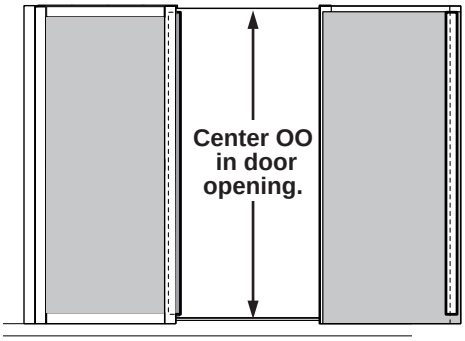

IT IS IMPORTANT TO HOLD THESE DIMENSIONS

Fig. B

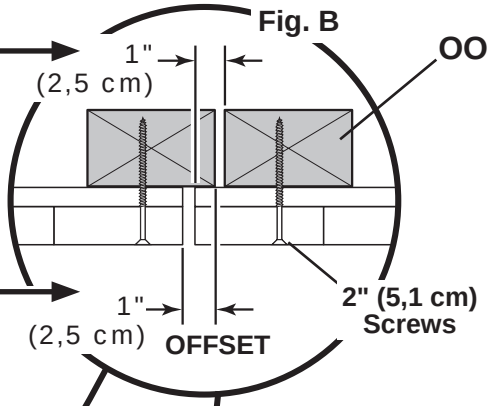

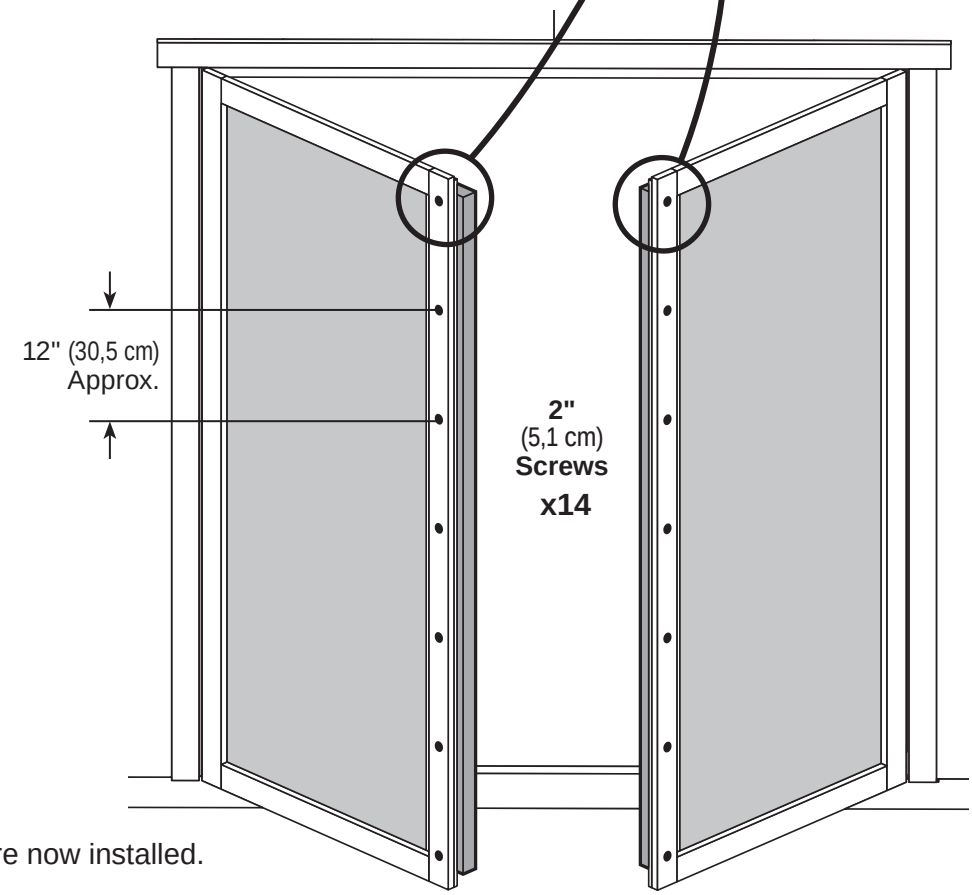

FINISH

Your door stiffeners are now installed.

DOORS

PARTS REQUIRED:

x2 AH
19/32" x 2-1/2" x 26 5/8" (1,5 x 6,3 x 67,6 cm)

x1 AHR
19/32" x 2-1/2" x 62" (1,5 x 6,3 x 157,5 cm)

x1 AHL
19/32" x 2-1/2" x 62" (1,5 x 6,3 x 157,5 cm)

x7
2" (5,1 cm)

x1
64" Metal Threshold

x1 ZJ
19/32" x 2-1/2" x 72" (1,5 x 7,6 x 182,9 cm)

x11
3/4" (1,9 cm)
Bagged separately/
special coating

x62
3/4" (1,9 cm)

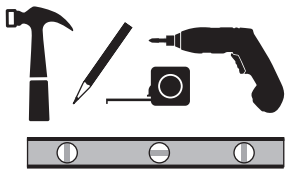

BEGIN

1 Install trim **AH**, **AHL** and **AHR** as shown. Level **AH** before installing. Fasten trim to each door from inside with (11) 3/4" screws **(Fig. A, Fig B)**.

2 Center trim **ZJ** over doors and secure with (7) 2" finishing nails into framing as shown.

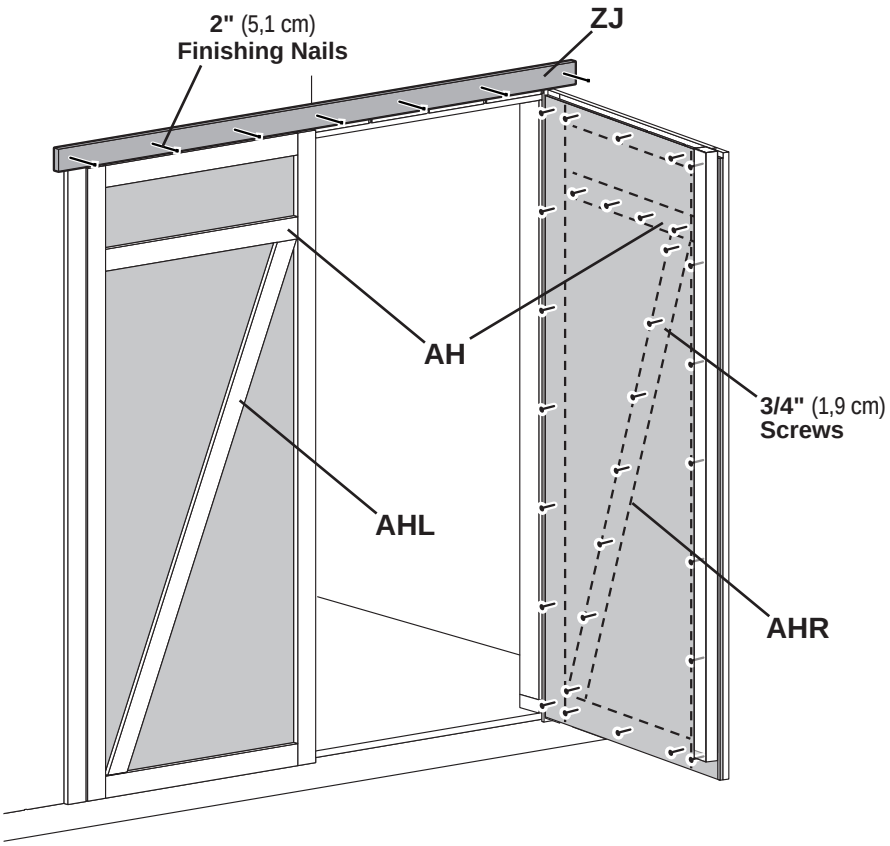

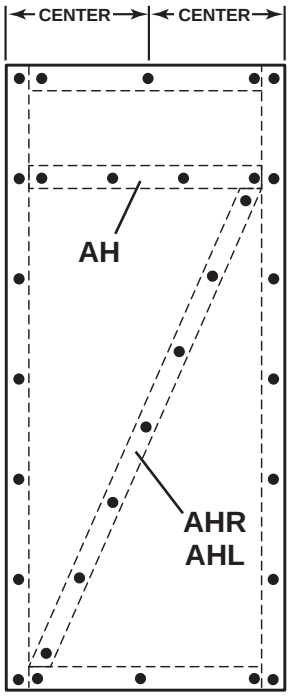

Fig. B

3 Install 64" metal threshold with (11) 3/4" screws.

(11) Special Coating Screws

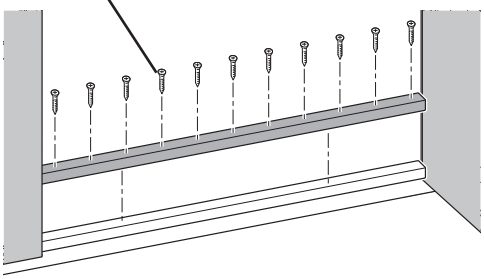

FINISH

Your door trim and metal threshold are now installed.

DOOR HARDWARE

PARTS REQUIRED:

x4 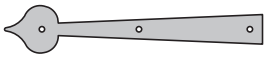

x12 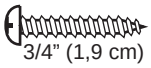
3/4” (1,9 cm)

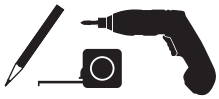

BEGIN

1 Install decorative hinges in locations shown. Secure with 3/4" screws.

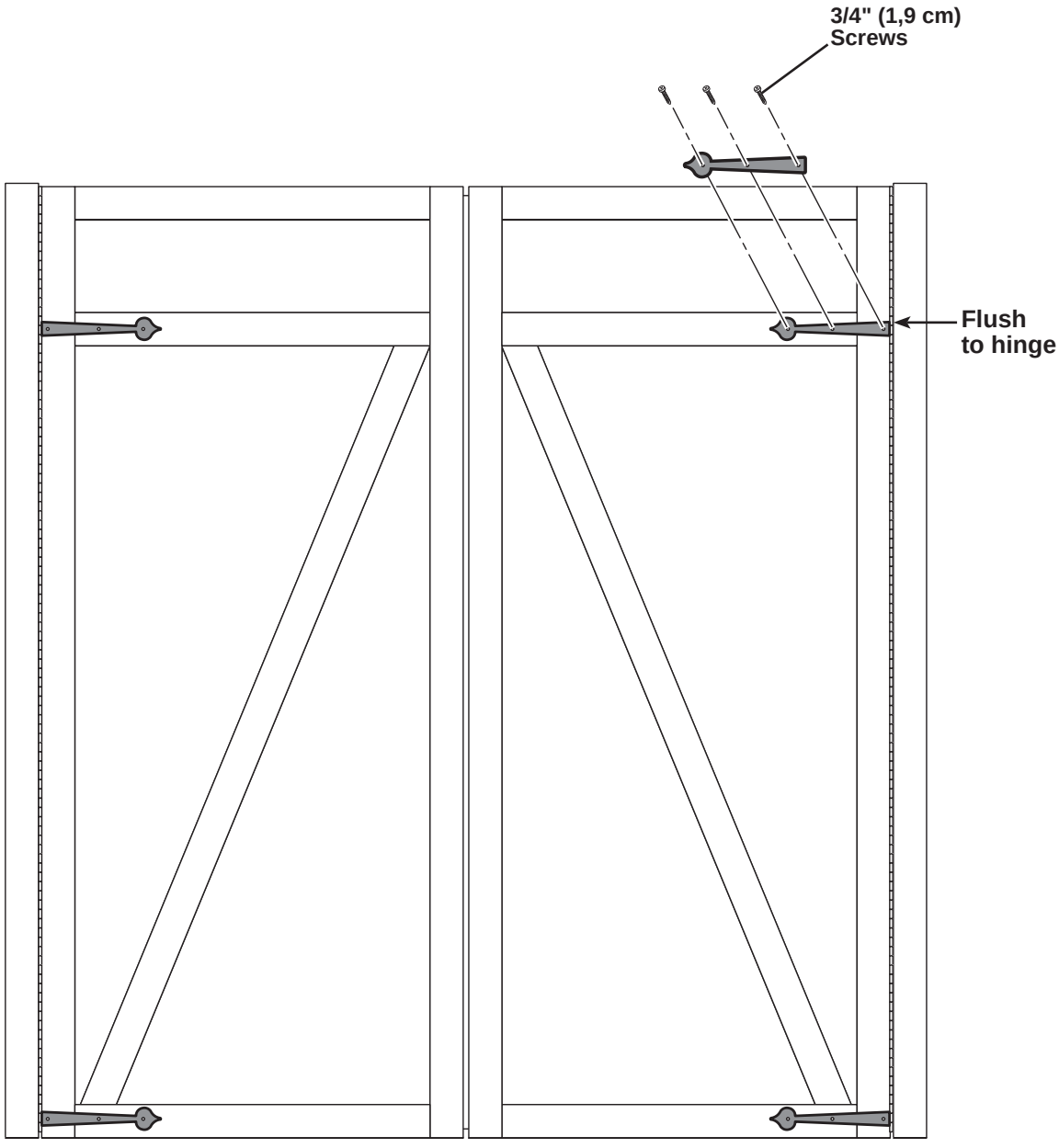

FINISH

Your decorative door hinges are now installed.

DOOR HARDWARE

PARTS REQUIRED:

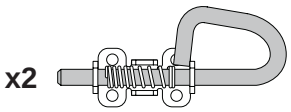





BEGIN

1. Place bolt on **OO** in open position with bolt end 3/8" (9,5 mm) down from frame. Bolt is open when loop is contacting base **(Fig A)**.

2. Mark and pre-drill holes for screws. Install bolt with screws supplied.

   Drill 5/16" (7,9 mm) hole deep enough for bolt to slide into.

3. Place bolt on **OO** in open position with bolt end 1/2" (12,7 mm) up from floor. Bolt is open when loop is connecting base **(Fig. B)**.

4. Mark and pre-drill holes for screws. Install bolt with screws supplied.

   Drill 5/16" (7,9 mm) hole deep enough for bolt to slide into.

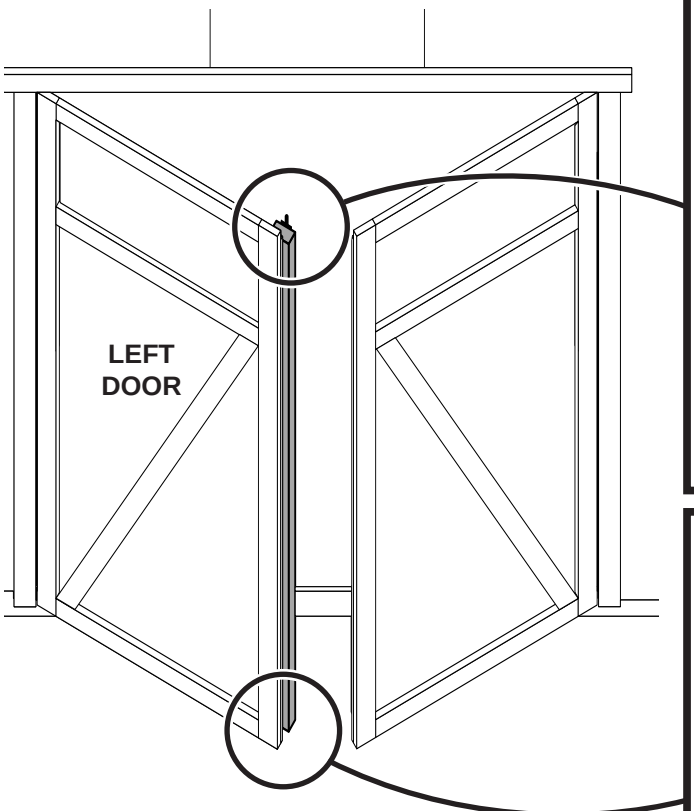

Fig. A

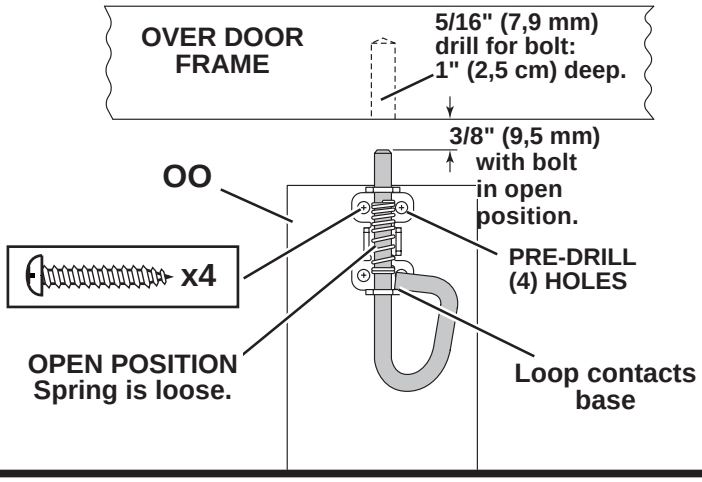

Fig. B

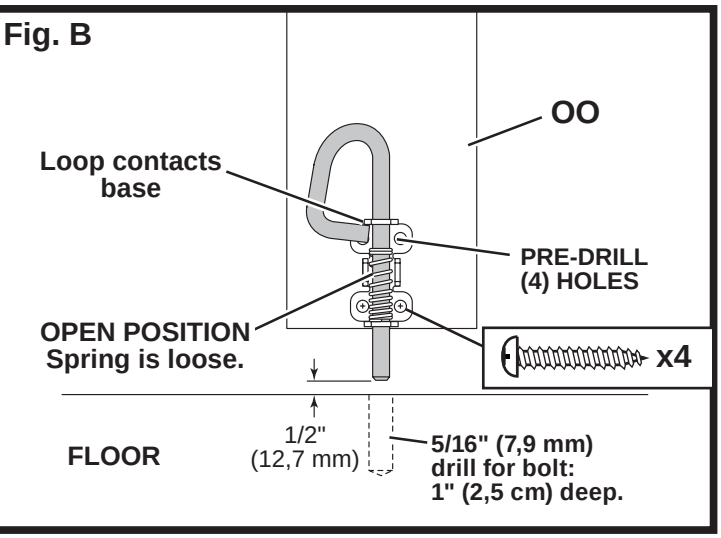

DOOR HARDWARE

PARTS REQUIRED:

x1

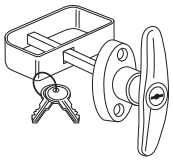

x2

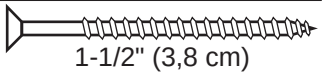

1-1/2" (3,8 cm)

3/8" (10,9 cm) Drill Bit

1/4" (0,6 cm) Drill Bit



5 Measure and mark location of hole on outside of right door as shown **(Fig. A)**. Pre-drill hole with 1/4" drill.

Re-drill hole with 3/8 " drill.

⚠ Keep drilled hole square to trim to avoid breaking edge of door stiffener.

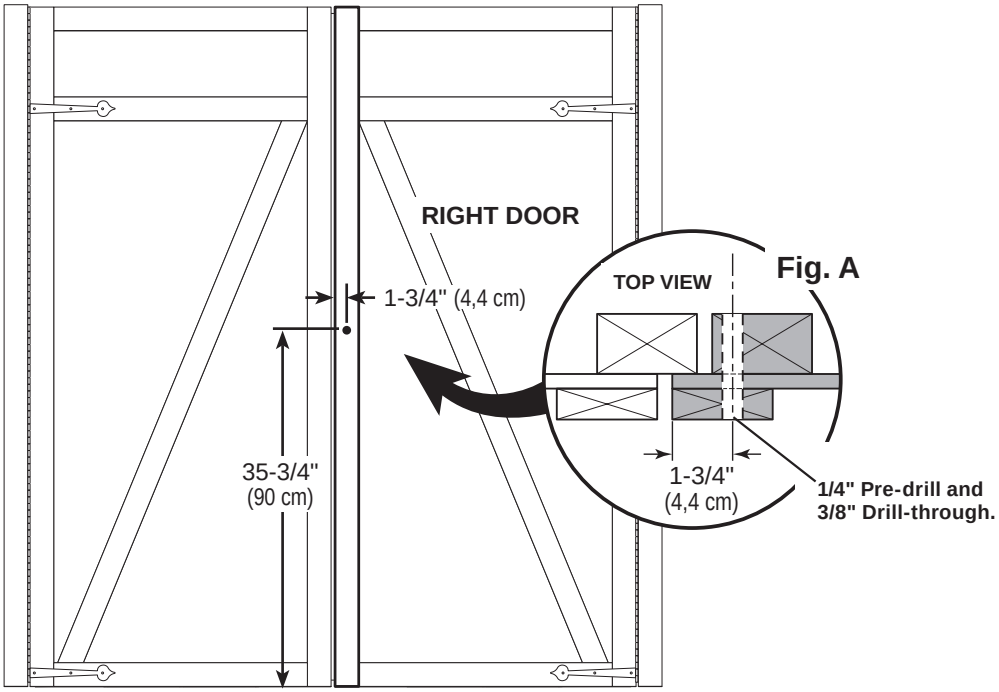

6 Insert handle in hole and secure with 1-1/4" screws.

Attach inside handle and secure with set screw as shown.

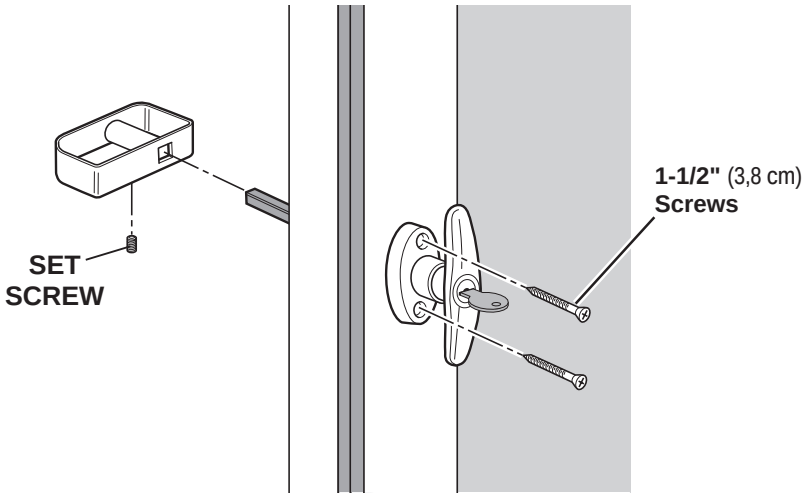

FINISH

Your spring bolt, T-handle and decorative hinges are now installed.

HOOK & EYE

PARTS REQUIRED:



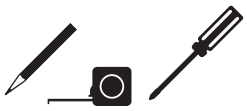

BEGIN

1 Install hooks in wall and into framing behind **(Fig.A)**.

2 Swing door open to locate eye.

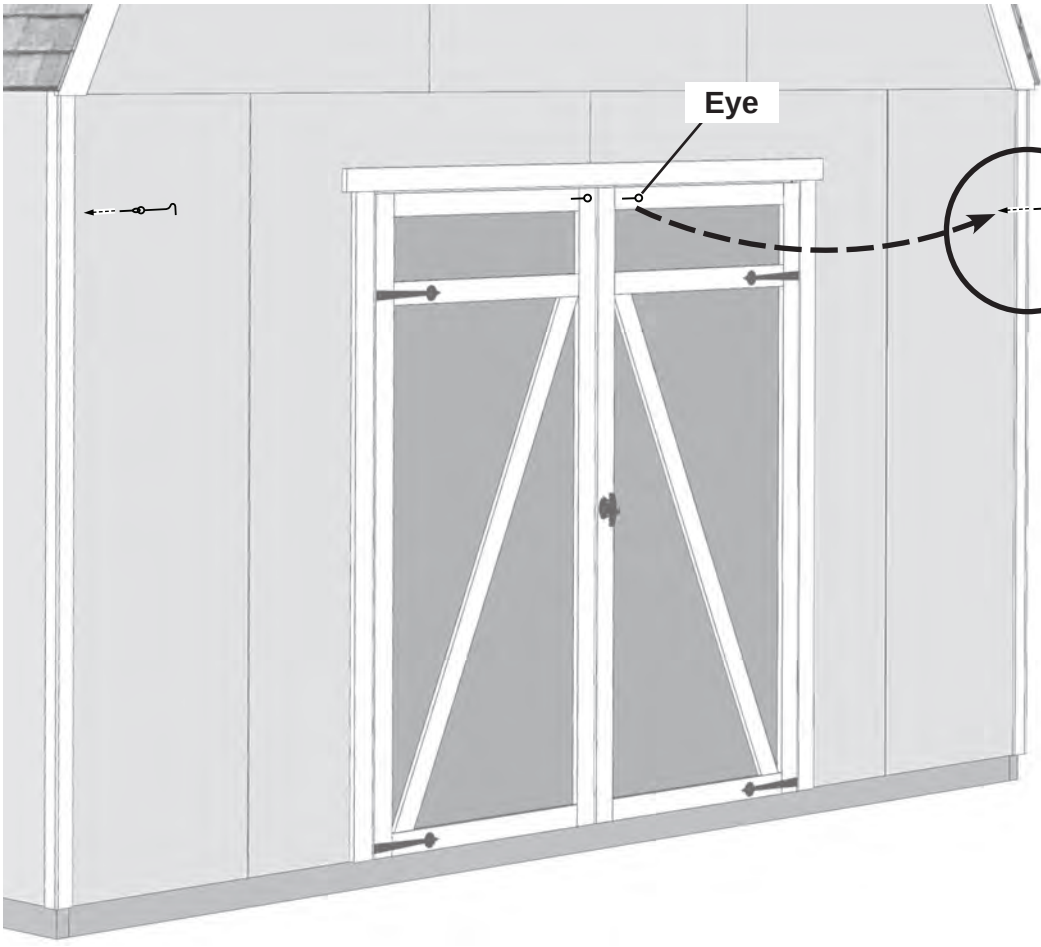

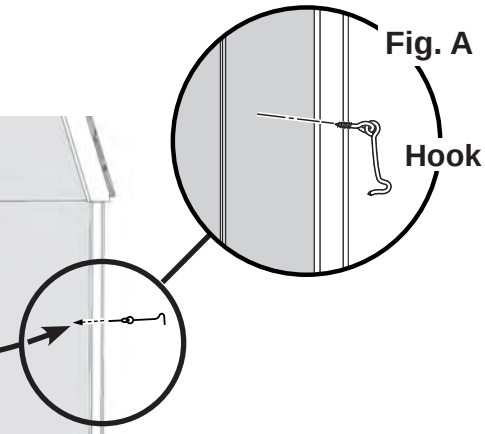

Install hook into framing, if possible.

FINISH

You have installed your hook & eyes.

GABLE WINDOW

PARTS REQUIRED:

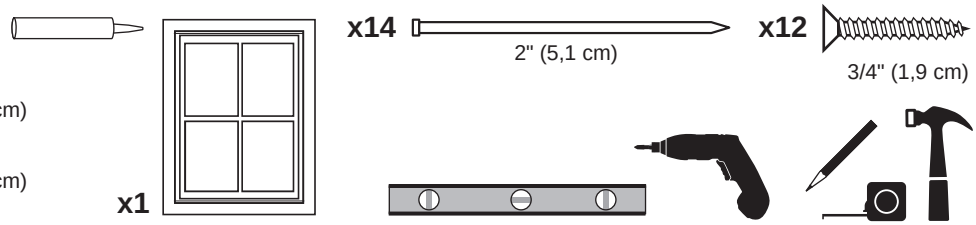

x2 KX
19/32" x 2-1/2" X 21-3/4"(1,6 x 7,6 x 55,2 cm)

x2 CYZ
19/32" x 2-1/2" X 24-3/4"(1,6 x 7,6 x 62,9 cm)

BEGIN

1 Center window in front gable as shown and secure with 3/4" screws.
Seal back of window with high-quality paintable exterior caulk before installing.

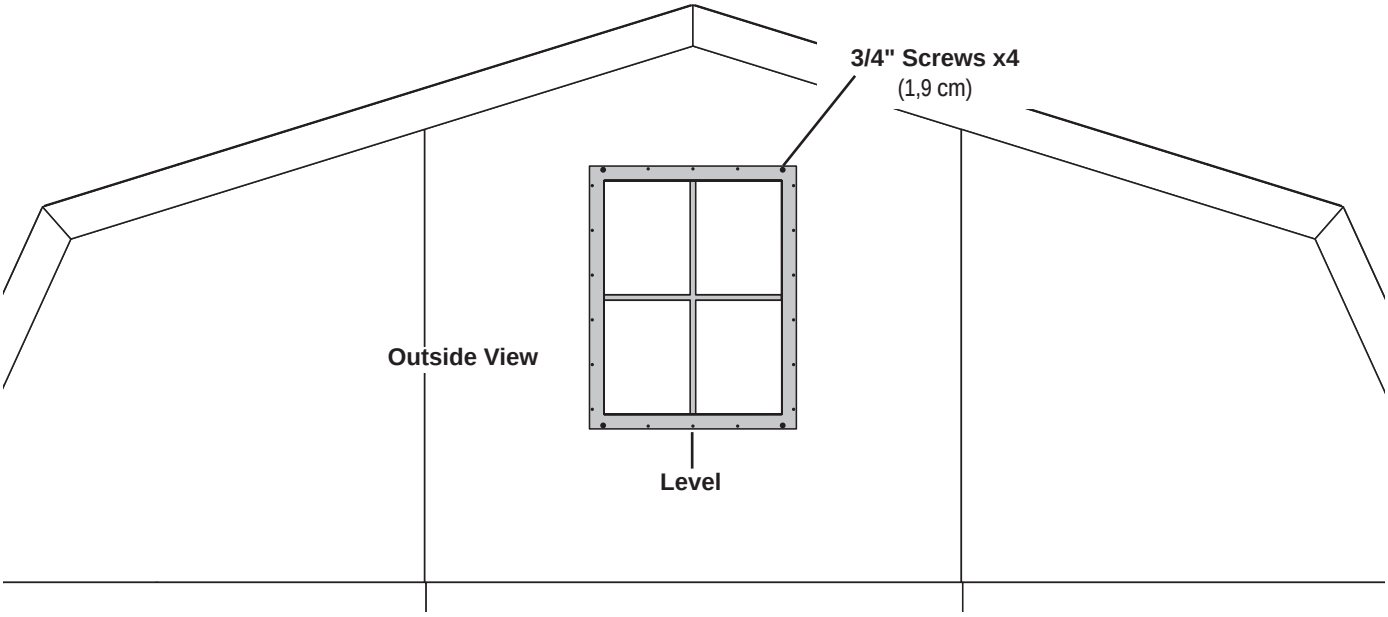

2 Install (2) each of window trim **KX** and **CYZ** centered over window.
Secure with 3/4" screws and 2" finishing nails, as shown.
Do not screw or nail into frame of window.
Snip off protruding nails from inside.

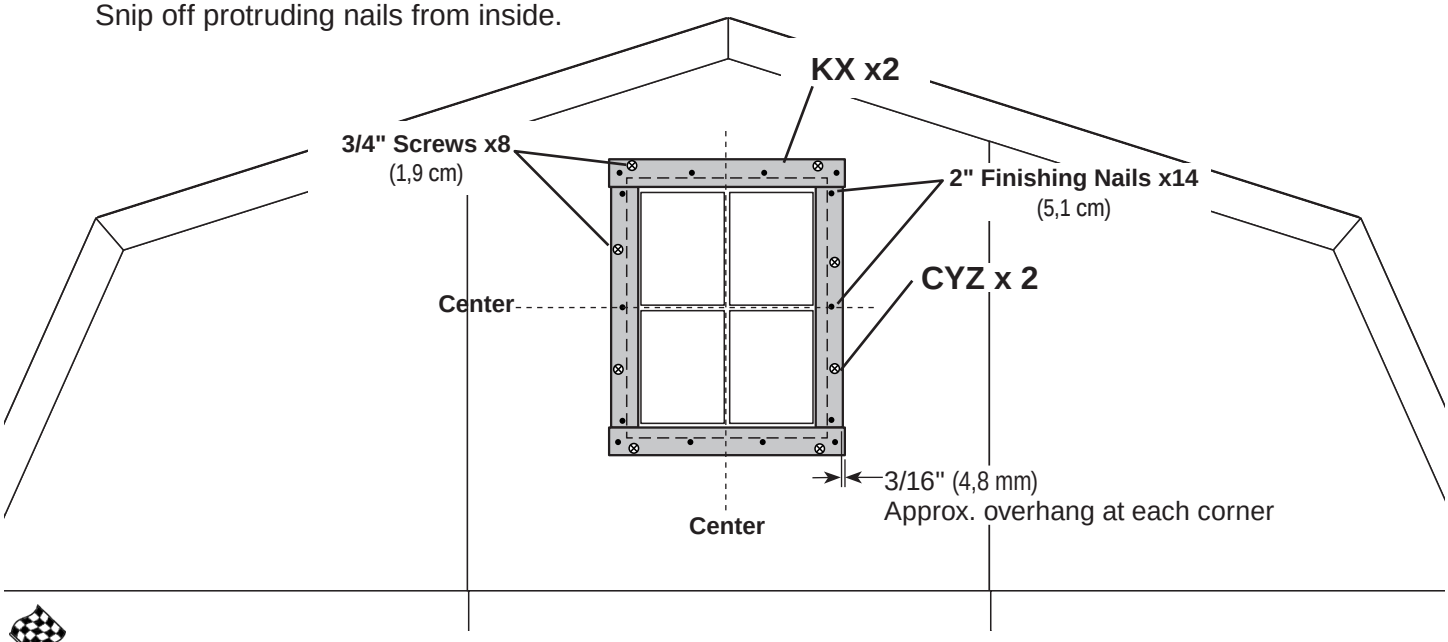

FINISH

Your gable window and trim are now installed.

VENT (Not included in kit.)

• Follow directions provided by manufacturer and these instructions.

x2

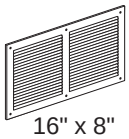

16" x 8"

x12

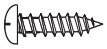

1/2" (13 mm)

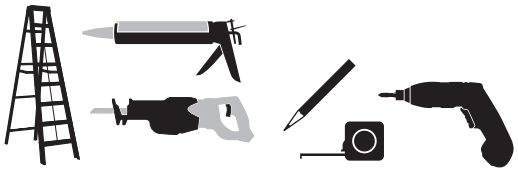

BEGIN

1 Locate and mark for two vents in side walls as shown; (1) at top and (1) at bottom.

Cut out marked openings.

Caulk behind vent flanges.

Secure with 1/2" screws.

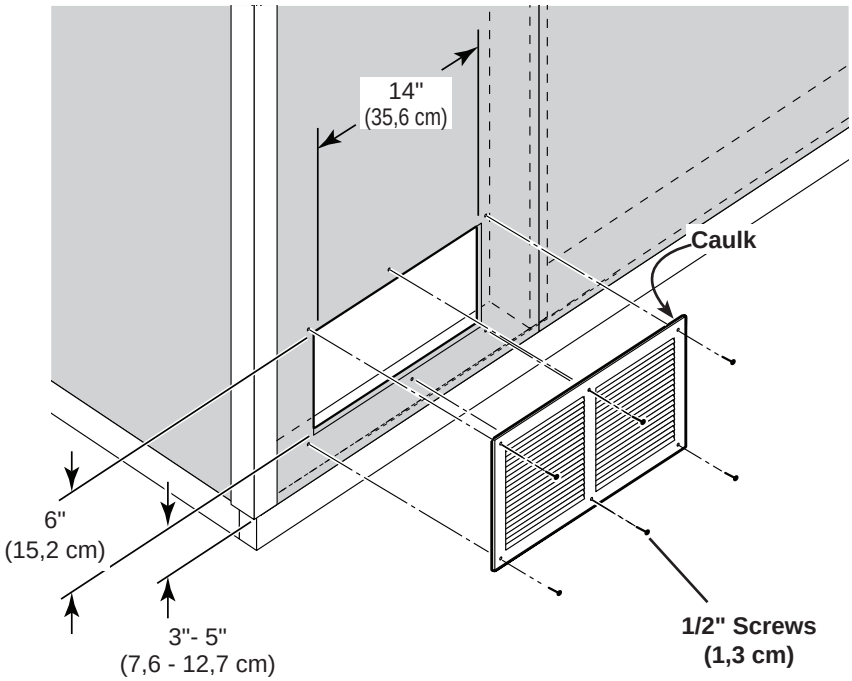

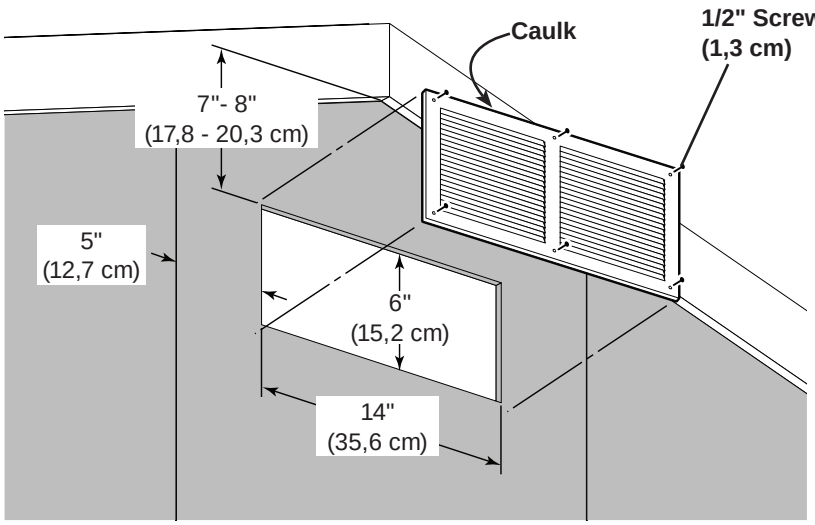

FINISH

Your vents are now installed.

PAINT & CAULK
- NOT INCLUDED -



- Use acrylic latex caulk that is paintable. Caulk at all horizontal and vertical seams, between the trim and walls, and all around the door trim.

- Use a high quality exterior acrylic latex paint. When painting your building, there are a few key areas that can be easily overlooked that must be painted:
  - Bottom edge of all siding and trim
  - Inside of doors and all 4 edges

Note:
Prime all un-primed exterior wood before painting.
(Follow directions provided by manufacturer.)

ROOF FELT
- NOT INCLUDED -

- Install felt flush to all roof edges overlapping 3". Use minimal amount of roofing nails to hold in place.

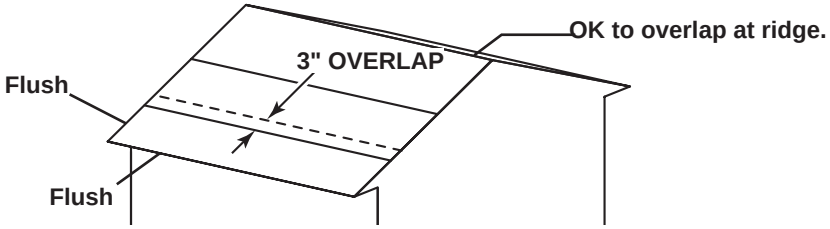

DRIP EDGE
- NOT INCLUDED -

⚠ Drip edge is only installed on the front and back sides of this shed.



- Install over roof felt or over roof deck.
- Do not use nails on side of drip edge that hangs over side of building.
- Only nail top of drip edge as shown.

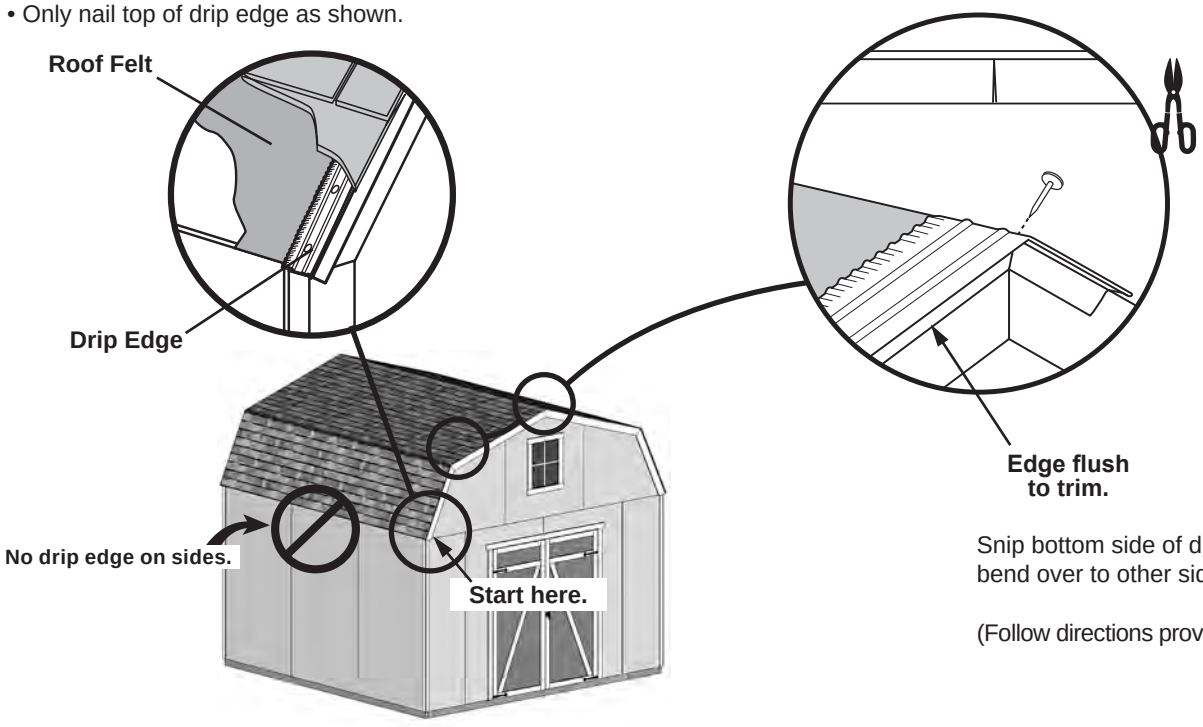

Snip bottom side of drip edge and bend over to other side of roof.

(Follow directions provided by manufacturer.)

NOTE: 12' x 12' Model Shown.

SHINGLES
- NOT INCLUDED -

• Follow directions provided by manufacturer and these instructions.

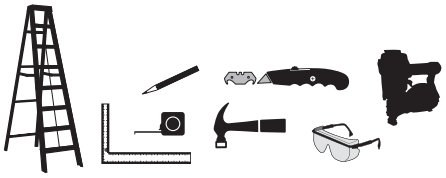

⚠ Familiarize yourself with a 3-Tab Shingle.

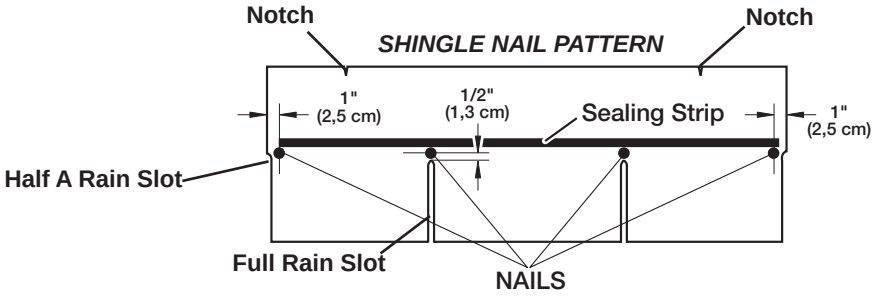

⚠ NEVER DRIVE FASTENERS INTO OR ABOVE SEALING STRIPS.

✓BEGIN

1 Install first starter row upside down and color up with a 1" overhang at back and bottom of roof panel. Use (4) nails per shingle. Starter row must be straight and level all the way across with lower edge of roof deck.
NOTE: If you have installed drip edge install shingles flush to drip edge.

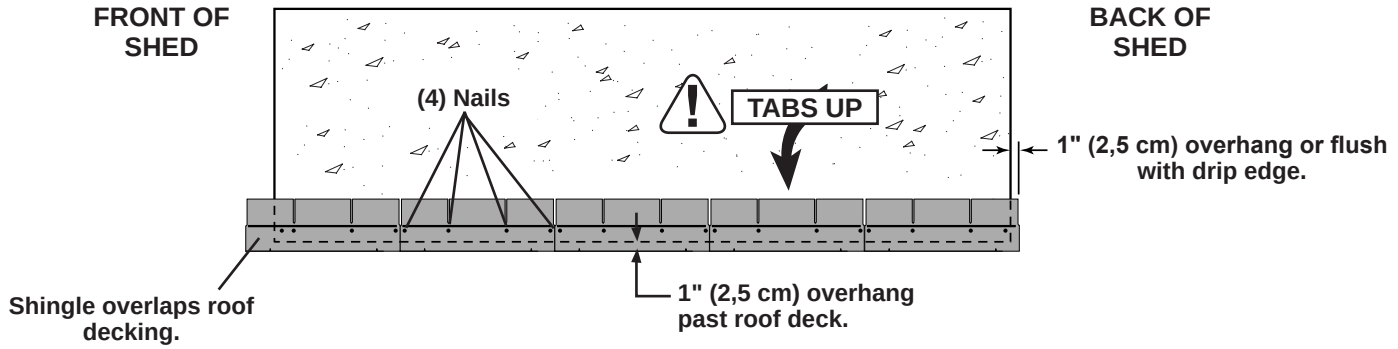

SHINGLES
continued...

2 Beginning at front of shed, install first row of shingles with notch at 1" past roof edge or flush with drip edge.

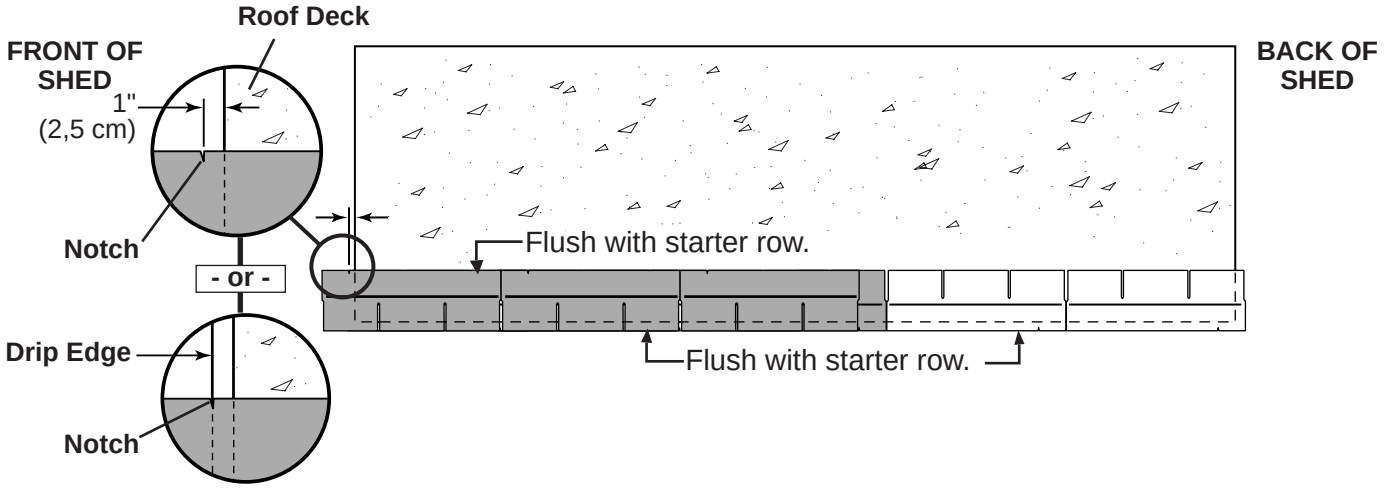

3 Install second row of shingles flush at top of first row's rain slots. Ensure 1" overhang or flush to drip edge at front, stagger each row.

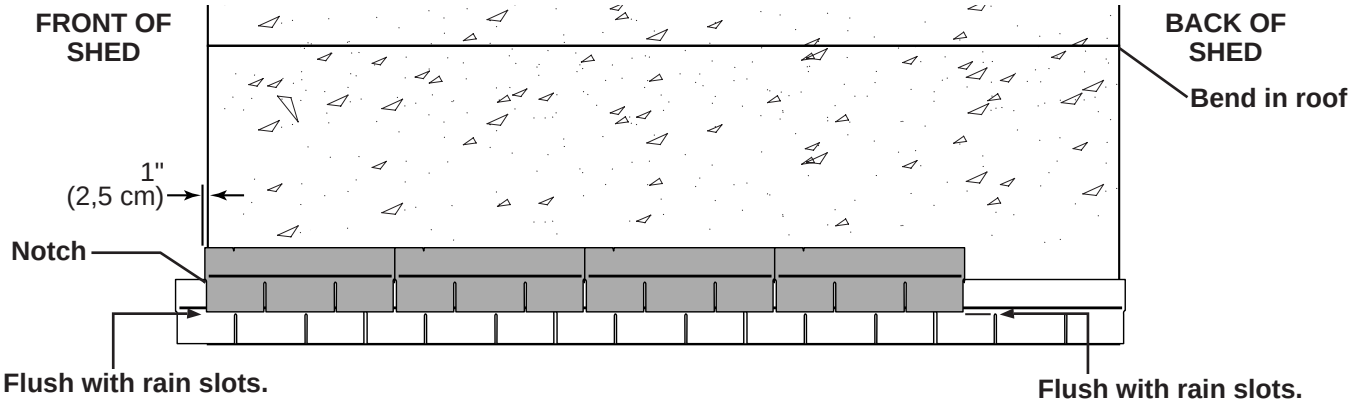

4 Continue installing rows of shingles by staggering at front.

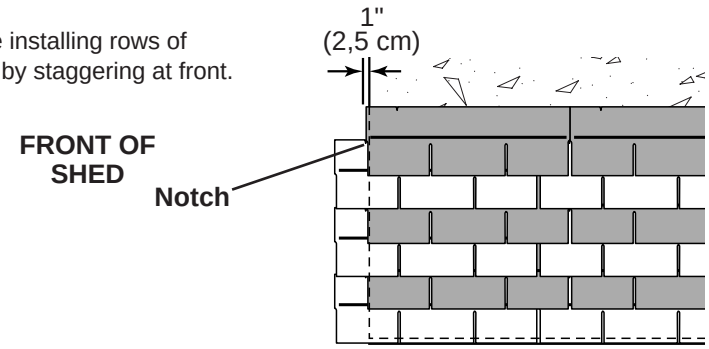

5 Continue installing rows of shingles to the peak. At the peak make sure there is a maximum of 5" or less to the rain slot, as shown below. If shingles overlap at ridge cut to peak with a utility knife.

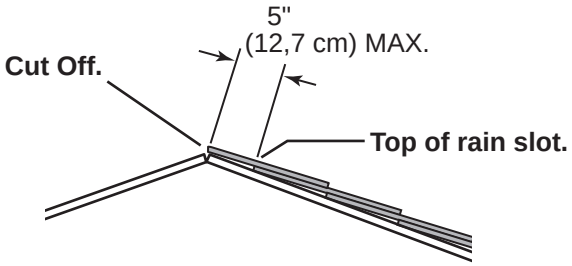

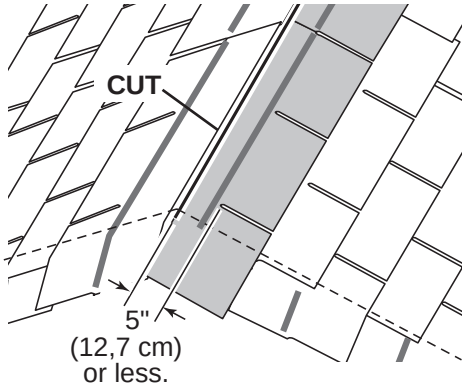

⚠ • If more than 5" to rain slot you must install another row of shingles.

6 Repeat steps 1 - 7 to shingle the opposite side of your roof. Trim shingles at ridge.

7 Once both sides are shingled you need to trim ends. Strike a chalk line 1" from edge.

8 Using your shingle hooked blade carefully cut shingles along chalk line.

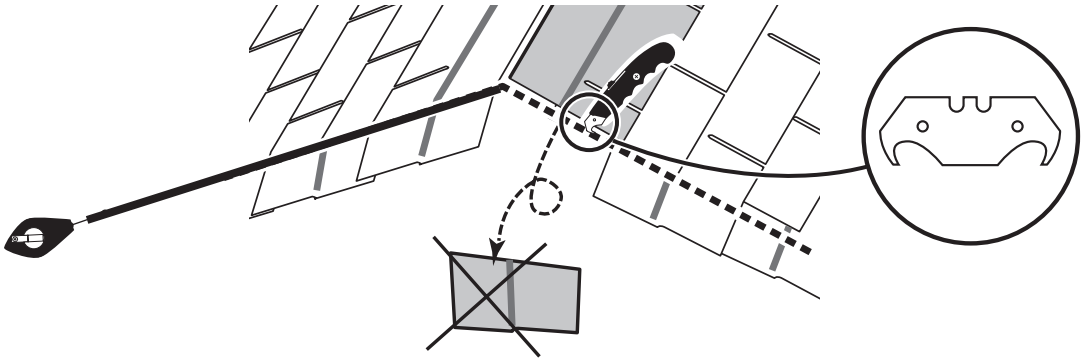

FINISH

You have finished shingling your roof. Proceed to capping the ridge.

SHINGLES - RIDGE CAP

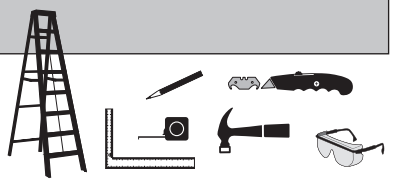

• You will finish off the top of the roof with a ridge cap made from shingles.

BEGIN

1 Cut shingles in THREE pieces. Hint: Use cut-off pieces first.

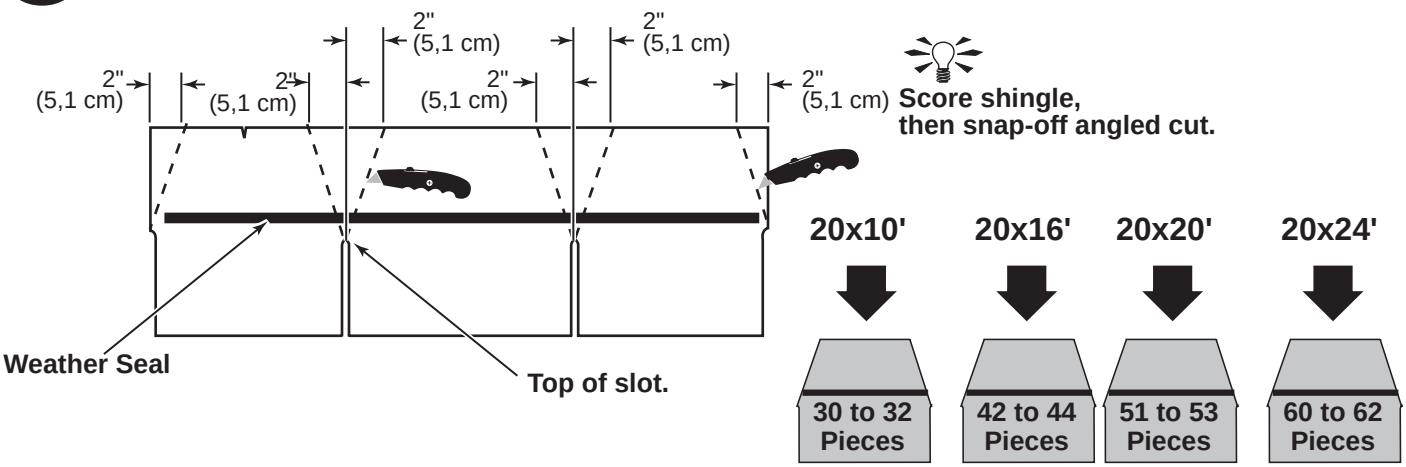

2 Install first ridge cap flush to shingles at front, as shown.

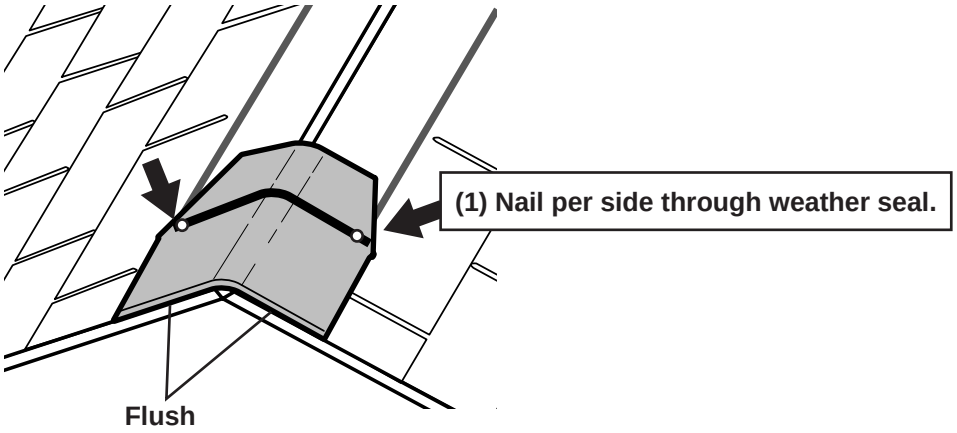

3 Install second ridge cap 5" back, as shown.

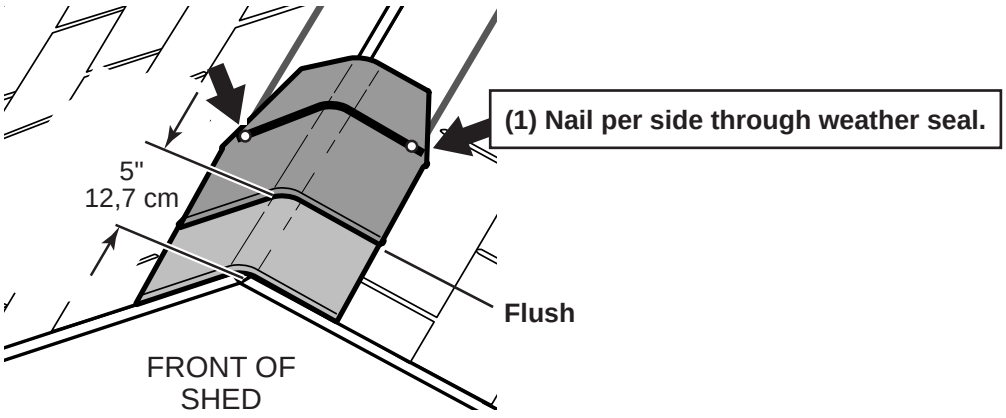

SHINGLES - RIDGE CAP
continued...

4 Continue installing ridge cap to back of roof.

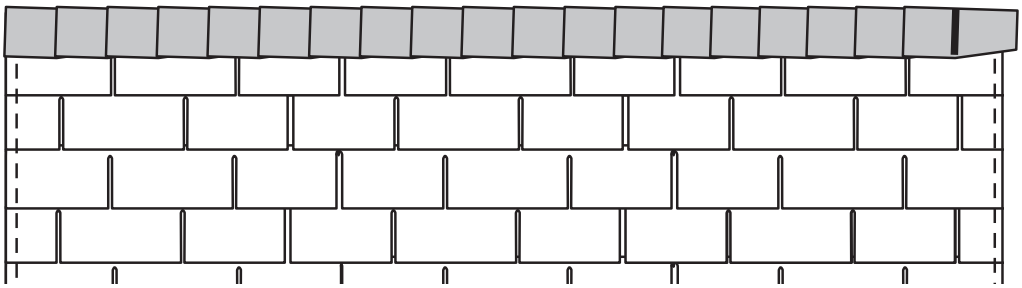

5 Make sure there is 4" between the shingle-color and edge of shingles.

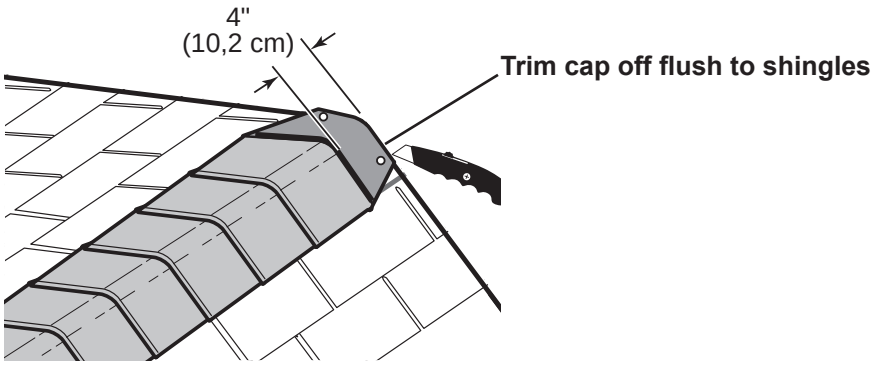

6 When you have 4" minimum of shingle color cut one piece to cap your roof.

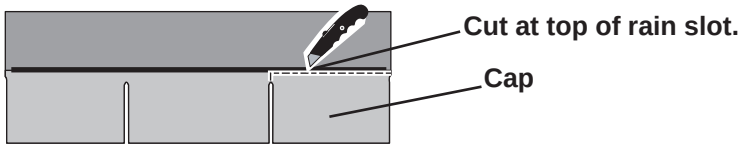

7 Install flush to shingles.

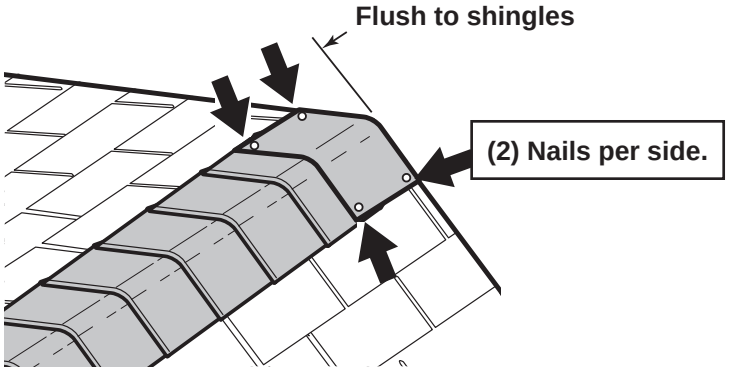

FINISH

You have finished your ridge cap.

16502-B 12' x12' Order Form

CATEGORY	PART DESCRIPTION	PART SIZE	PART ITEM #	BUILDING QTY.	PART ID
2 X 3	Loft Ledger Board "A"	LUM SPF 2X3X96 #2&BTR	12115	1	PT
	Loft Ledger Board "B"	2 X 3 X 48" PLATE	Q 48000000000	1	NK
2 x 4	Back Wall Top & Btm "A" / Dblr "A" / Loft	LUM SPF 2X4X96 #2&BTR	12306	10	TP
	Side Wall T & B Plate "A" / Dblr "B"	LUM SPF 2X4X92-5/8 #2&BTR	12305	4	TJ
	Side Wall B Plate "B"	2 X 4 X 44 3/8" PLATE	O 44060000000	4	HVC
	Side Wall Top Plate	2 X 4 X 68-1/2"	O 68080000000	4	YFA
	Doubler "C"	2X4X48" DOUBLER/ PLATE/ CRATE	O 48000000000	10	SP
	Collar Tie	2 X 4 X 60" PLATE	O 60000000000	2	SX
	Wall Studs	2 X 4 X 78 1/2"	O 78080000000	23	AI
	Jack Studs	2 X 4 X 68" STUD	O 68000000000	2	UM
	Over Door Crippler	2 X 4 X 7"	O 07000000000	5	AL
	Header	2 X 4 X 67"	O 67000000000	2	AM
	Front / Rear Gable Connector	2 X 4 X 39" 17* O/E CONNECTOR	O 39001700000	4	QL
1 X 3 PINE	Gauge Block	1 X 3 X 5" PINE FILLER	U 05000000000	1	GAA
7/16 OSB	Upper Roof Panel "A" / Loft Deck "B"	OSB 7/16" x 4' x 8'	11110	3	---
	Upper Roof Panel "B"	7/16" OSB 47 7/8" X 48" ROOF	C 48004714000	2	---
	Lower Roof Panel "A"	7/16" OSB 23 7/8" X 96" ROOF	C 96002314000	2	---
	Lower Roof Panel "B"	7/16" OSB 23 7/8" X 48" ROOF &	C 48002314000	2	---
	Door Header Filler	7/16" OSB 3 1/4" X 66 3/4" HEADER	C 66120304000	1	---
	Loft Deck "B"	7/16" OSB 40 7/8" X 48" LOFT P	C 48004014000	1	---
	Upper Soffit Roof Panel "A"	7/16" OSB 12 1/2" X 96" ROOF	C 96001208000	2	---
	Upper Soffit Roof Panel "B"	7/16" OSB 12 1/2" X 48" ROOF	C 48001208000	2	---
	Lower Soffit Roof Panel "A"	7/16" OSB 11 7/8" X 96"	C 96001114000	2	---
	Lower Soffit Roof Panel "B"	7/16" OSB 11 7/8" X 48"	C 48001114000	2	---
GUSSETS	Gusset	EZ 8"/ OSB 6" X24" GUSSET 17*	J 24000600170	12	---
	Collar Tie Gusset	EZ 8"/ OSB 3 1/2" X 24" PRECUT	J 24000308000	2	---
NO GROOVE SIDING	Center Gable Panel With HOLE	3/8" NG 48" X 50 7/8" GABLE	K 5014480000W	1	---
	Center Gable Panel	3/8" NG 48" X 50 7/8" GABLE	K 50144800000	1	---
	Front / Rear Gable Panel - Right	3/8" X 43-3/8" X 48" RIGHT GABLE	K 48004306344	2	---
	Front / Rear Gable Panel - Left	3/8" X 43-3/8" X 48" LEFT GABLE	K 48004306444	2	---
	Corner Trim	3/8" NG 1 3/4" X 83-1/4"	K 83040112000	8	---
	Rearwall Panel "A" / Side Panel	SIDING NGSE 3/8X4'X7'	11507	9	---
	Rear Panel "B"	NG 23 7/8" X 84" WALL PANEL	K 84002314000	2	---
	Frontwall Panel Right	NG 48" x 84" RIGHT FRONTWALL	K 84004800101	1	---
	Frontwall Panel Left	NG 48" x 84" LEFT FRONTWALL	K 84004800201	1	---
19/32 X 3 SMART TRIM	Vertical / Over Door Trim	19/32 TST 2 1/2" X 72" TRIM	UT72000208000	1	ZJ
	Long Cross Buck - Right	19/32 TST 2 1/2" X 62" 22.5*	UT62000208221	1	AHR
	Long Cross Buck - Left	19/32 TST 2 1/2" X 62" 22.5*	UT62000208222	1	AHL
	Horizontal Door Rail	19/32 TST 2 1/2" X 26 5/8"	UT26100208000	2	AH
	Vertical Window Trim	19/32 TST 2 1/2" X 24-3/4" FA	UT24120208000	2	CYZ
	Horizontal Window Trim	19/32 TST 2 1/2" X 21 3/4"	UT21120208000	2	KX
19/32 X 4 SMART TRIM	Lower Gable Trim Right	2 X 4 X 36" 24*/24* RIGHT	UT36002424100	2	ZJR
	Lower Gable Trim Left	2 X 4 X 36" 24*/24* LEFT	UT36002424200	2	ZJL
	Upper Gable Trim Right	19/32 TST 3 1/2" X 60 7/8" RGT	UT60141724100	2	ZOR
	Upper Gable Trim Left	19/32 TST 3 1/2" X 60 7/8" LFT	UT60141724200	2	ZOL
PURCHASED COMPONENTS	Door Stiffener	LSL 1-1/4 X 2-1/4 X 69 PET	12715	2	OO
	Gable Window	WINDOW 16 1/4 X 24 1/4 SM SQ	15276	1	---
	Black T-Handle w/ Faux Hinges	HANDLE - T & "D" HANDLES, FAUX	15220	1	---
	Threshold	THRESHOLD 7/8" X 1-1/2" X 63-7/8	15420	1	---
PACKAGING	Instructions		16502-B	1	---
	30222-RNG				
Right Door Assembly	Door Panel	NG 31 1/4" X 71 3/8" DOOR	K 7106310400C	1	---
	Right Hinge Assembly	HINGE RIGHT (RED) 19/32x3 THIN TRIM	30121-TT	1	---
	Vertical Door Stiles	19/32 TST 2 1/2" X 71 5/8"	UT71100208000	2	GY
	Horizontal Door Rails	19/32 TST 2 1/2" X 26 5/8"	UT26100208000	2	AH
	30222-LNG				
Left Door Assembly	Door Panel	NG 31 1/4" X 71 3/8" DOOR	K 7106310400C	1	---
	Left Hinge Assembly	HINGE LEFT (GREEN) 19/32x3 THIN TRIM	30131-TT	1	---
	Vertical Door Stiles	19/32 TST 2 1/2" X 71 5/8"	UT71100208000	2	GY
	Horizontal Door Rails	19/32 TST 2 1/2" X 26 5/8"	UT26100208000	2	AH
	30070-M				
Sub Assembled Truss	Upper Truss	2 X 4 X 60 1/2" 17*-24* TRUSS	O 60081724000	1	---
	Lower Truss	2 X 4 X 35" 24*-24*TRUSS PART	O 3500242400A	1	---
	Truss Plate	PLATE MENDING 2 1/2 X 6" 20 GA	15704	2	---

LIMITED CONDITIONAL WARRANTY*

Backyard Storage Solutions, LLC warrants the following:

1. Every product is warranted from defects in workmanship and manufacturing for 1 year.
2. All accessories, hardware and metal components are warranted for 2 years.
3. All Oriented Strand Board (OSB) is warranted for 2 years
4. Siding and Trim is warranted for 10 years.
5. Solar Shed windows are warranted for 1 year.
6. Cedar lumber is warranted for 15 years.
7. Preserved Pine is warranted for 10 years.
8. Redwood is warranted for 10 years.

Backyard Storage Solutions, LLC will repair, replace or pay for the affected part. In no event shall Backyard Storage Solutions, LLC pay the cost of labor or installation or any other costs related thereto. All warranties are from date of purchase. If a cash refund is paid on an affected part, it will be prorated from the date of purchase.

CONDITIONS

The warranty is effective only when:

1. The unit has been erected in accordance with the assembly instructions.
2. The unit has been properly shingled and painted or stained and reasonably and regularly maintained thereafter.
3. The failure occurs when the unit is owned by the original purchaser.
4. Backyard Storage Solutions, LLC has received the warranty registration card within thirty (30) days of purchase and notification of the failure in writing within the warranty period specified above.
5. Backyard Storage Solutions, LLC has had reasonable opportunity during the sixty (60) days following receipt of notification to inspect and verify the failure prior to commencement of any repair work.

REQUIREMENTS

Storage Buildings

To validate your warranty, it is necessary to properly maintain your Backyard Storage Solutions, LLC unit; shingle the roof and paint or solid-colored stain the siding using quality, 100% acrylic latex exterior product with a minimum of two (2) coats within thirty (30) days of assembly; caulk above all doors and all horizontal and vertical trim boards; paint and seal all exposed edges, sides and faces of siding/trim and OSB siding to include all exterior walls and all sides and all edges of doors.

Gazebos & Pergolas

To validate your warranty, it is necessary to properly maintain your Backyard Storage Solutions, LLC unit. This includes treating all of the exposed cedar and pine surfaces on your gazebo or pergola structure with an exterior grade wood preservative, an exterior oil-based semi-transparent stain, an acrylic latex exterior paint or an acrylic latex solid color exterior stain within 30 days of assembly and as needed thereafter to maintain your warranty.

Keep vegetation trimmed away from building and make sure siding panels and trim do not come in contact with masonry or cement. The minimum ground clearance for siding must be one half inch (½ inch) from concrete slab or two and one half inches (2 ½") from the ground when building is erected or constructed on a treated wood floor kit. Water from sprinklers must be kept off unit. In no event will Backyard Storage Solutions, LLC be responsible for any indirect, incidental, consequential or special damages nor for failure(s) that are caused by events, acts or omissions beyond our control including, but not limited to, misuse or improper assembly, improper maintenance (which eventually leads to rot or decay) and acts of God. Backyard Storage Solutions, LLC will not be held responsible for any labor costs incurred to construct your unit.

This warranty gives you certain specific rights that vary from state to state.

CLAIM PROCEDURE

To make a claim under this warranty, you can either call 1-888-827-9056 or email: customerservice@backyardproducts.com.

Please have ready the information below when you call or include the information in your email:

1. The model and size of the product.
2. A list of the part(s) for which the claim is made.
3. Proof of purchase of the Backyard Storage Solutions, LLC item, as shown on the original invoice or receipt.
4. Run code: found on exterior product label or assembly instructions enclosed in the product package.

All other inquiries can be mailed to:

Backyard Storage Solutions, LLC
Attn: Customer Service
1000 Ternes
Monroe, MI 48162

***WARRANTY TERMS MAY VARY OUTSIDE THE U.S.A.**

IMPORTANT: This is your warranty certificate.