ITEM #6037538

MODEL #SH25S0030H

ASHTON 3PC BALCONY SET

STYLE SELECTIONS and logo design are trademarks or registered trademarks of LF, LLC. All rights reserved.

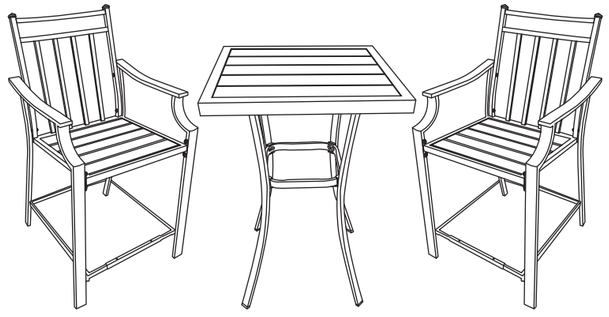

DF25434

Questions, problems or missing parts?
Before returning, contact us on:
877-888-8225, 8 a.m. - 8 p.m., EST, Monday - Sunday or **ascs@lowes.com.**

Thank you for purchasing this STYLE SELECTIONS product. We've created these easy-to-follow instructions to ensure you spend your time enjoying the product instead of putting it together. But, if you need more information than what is provided here, please visit Lowes.com, search the item number and refer to the Guides & Documents tab on the product's page.

CARE AND MAINTENANCE

- Wash frame parts with mild soap and water, rinse thoroughly, and dry completely. Do not use bleach, acid, or other solvents on the frame parts.
- We recommend the use of furniture covers when not in use.
- Inspect and tighten all of the bolts and fasteners on a regular basis to ensure the proper performance and safety of your chair.
- In order to prolong the life and beauty of your chair, we recommend that it be stored in a dry and protected area during off season periods.

WARRANTY

One-year limited warranty.
Proof of purchase (dated register receipt) is required for warranty claims.
It remains the customer's responsibility for freight and packing charges to and from the service center.
This limited warranty is extended to the original purchaser and applies to defects in materials and workmanship of your patio furniture, provided your furniture is maintained with care and used only for personal, residential purposes.
Exclusions: Items used for commercial, contract or other non-residential purposes; display models; items purchased "as is;" or items damaged due to acts of nature, vandalism, misuse or improper assembly are not covered. Discoloration or fading of the finish or fabrics as a result of exposure to the elements, chemicals or spills; tabletop breakage; corrosion or rusting of hardware; and damages to frames or welds caused by improper assembly, misuse or natural causes are not covered.
If within the stated warranty period a product is found to be defective in material or workmanship, the purchaser must contact the manufacturer's customer service department at **877-888-8225**. The manufacturer, at its option, will repair or replace the defective parts.
The warranty is to the original purchaser and is non-transferable. Any replacement of warranted items will be in the original style and color, or a similar style and color if the original is unavailable or has been discontinued. As some states do not allow exclusions or limitations on an implied warranty, the above exclusions and limitations may not apply. This warranty gives you specific rights and you may also have other rights which vary from state to state.

PREPARATION

Before beginning assembly of product, make sure all parts are present. Compare parts with package contents list and hardware contents list.
If any part is missing or damaged, do not attempt to assemble the product.

Note:
The labels marked "L" and "R" on the arms and legs (#A, #B, #C, and #D) should coincide with Figure 1 to ensure proper assembly.

Estimated Assembly Time: 30 minutes

NO ADDITIONAL TOOLS REQUIRED

FEELING CONFIDENT? START YOUR NEXT PROJECT

- Visit www.lowes.com for more information.







Printed in Vietnam

SAFETY INFORMATION

Please read and understand this entire manual before attempting to assemble, operate or install the product.

WARNING
- Use the correct bolts as indicated. Do not tighten any of the bolts until the chair is completely assembled.
- Some parts may contain sharp edges. Wear protective gloves as necessary.
- Children under the age of 16 should not be engaged in the assembly, removal or disassembly of the product.
- Children under the age of 10 should be supervised by a competent adult while using this furniture.
- This set is heavy, and may require two adults for safe assembly.
- Never use this product as a support. Do not shake, lean, or climb on the product at any time.
- Do not discard of any of the packaging until you have checked that you have all of the parts and fittings required.
- Keep children away during assembly. This item contains small parts that can be swallowed by children. Children should always be under direct adult supervision while using this product. Mantenga a los niños alejados durante el ensamblaje.

CAUTION
- Do not overtighten any of the bolts as this may damage the threads.
- Repeated assembly can weaken the locking ability of the washers.
- Periodically check all bolted connections on the furniture to make sure they are tight and secure.
- Retain these instructions for future reference.
- Paint on this product might peel off if it is hit or used improperly.
- This outdoor furniture is designed and made for personal non-commercial use.
- This item should not be used as a toy or a tool.
- Do not locate the product near any heat source.
- Do not place heavy objects on the table top.

QUICK REFERENCE GUIDE

PACKAGE CONTENTS

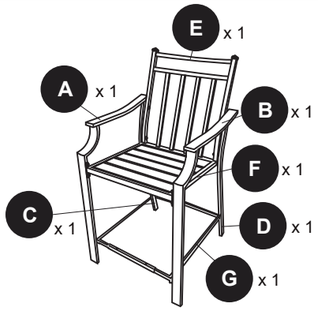

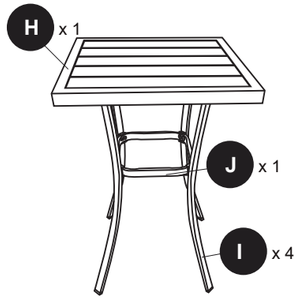

HARDWARE CONTENTS

Note: Hardware not shown actual size.

AA	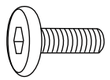	x 29	BB	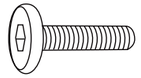	x 13
CC		x 49	DD	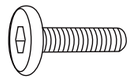	x 9
EE		x 1	FF	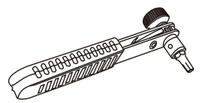	x 1

ASSEMBLE ON A SOFT SURFACE, SUCH AS A CARPET, TO AVOID SCRATCHING THE PRODUCT.

INSTALLATION OVERVIEW

1

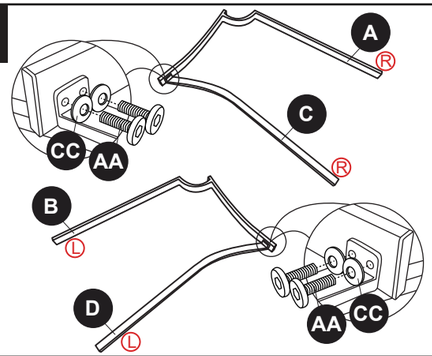

Hand tighten (AA). Once all bolts have been installed and hand tightened, go back and tighten firmly with wrench.

2

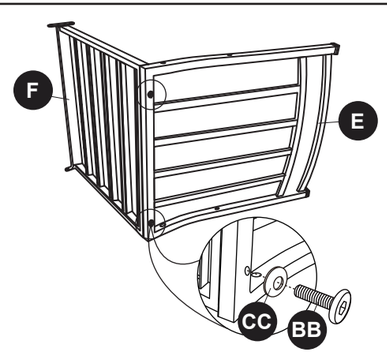

Hand tighten (BB). Once all bolts have been installed and hand tightened, go back and tighten firmly with wrench.

INSTALLATION OVERVIEW

3

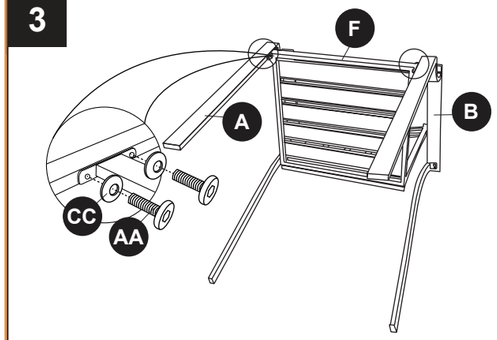

Hand tighten (AA). Once all bolts have been installed and hand tightened, go back and tighten firmly with wrench.

4

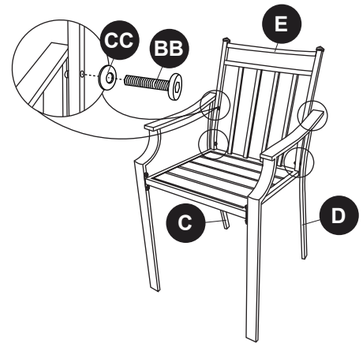

Hand tighten (BB). Once all bolts have been installed and hand tightened, go back and tighten firmly with wrench.

5

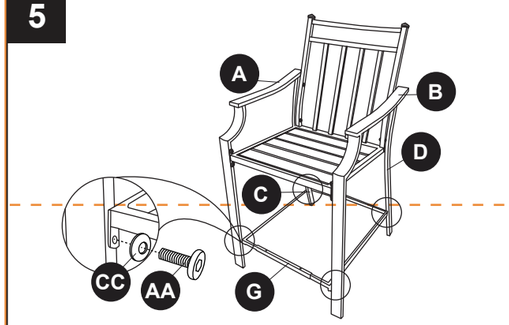

Hand tighten (AA). Once all bolts have been installed and hand tightened, go back and tighten firmly with wrench.

6

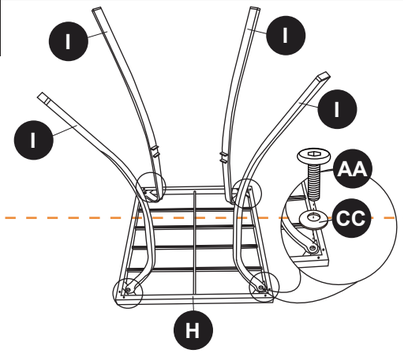

Hand tighten (AA). Once all bolts have been installed and hand tightened, go back and tighten firmly with wrench.

7

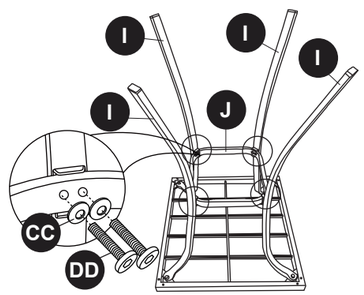

Hand tighten (DD). Once all bolts have been installed and hand tightened, go back and tighten firmly with wrench.

8



QUICK REFERENCE GUIDE