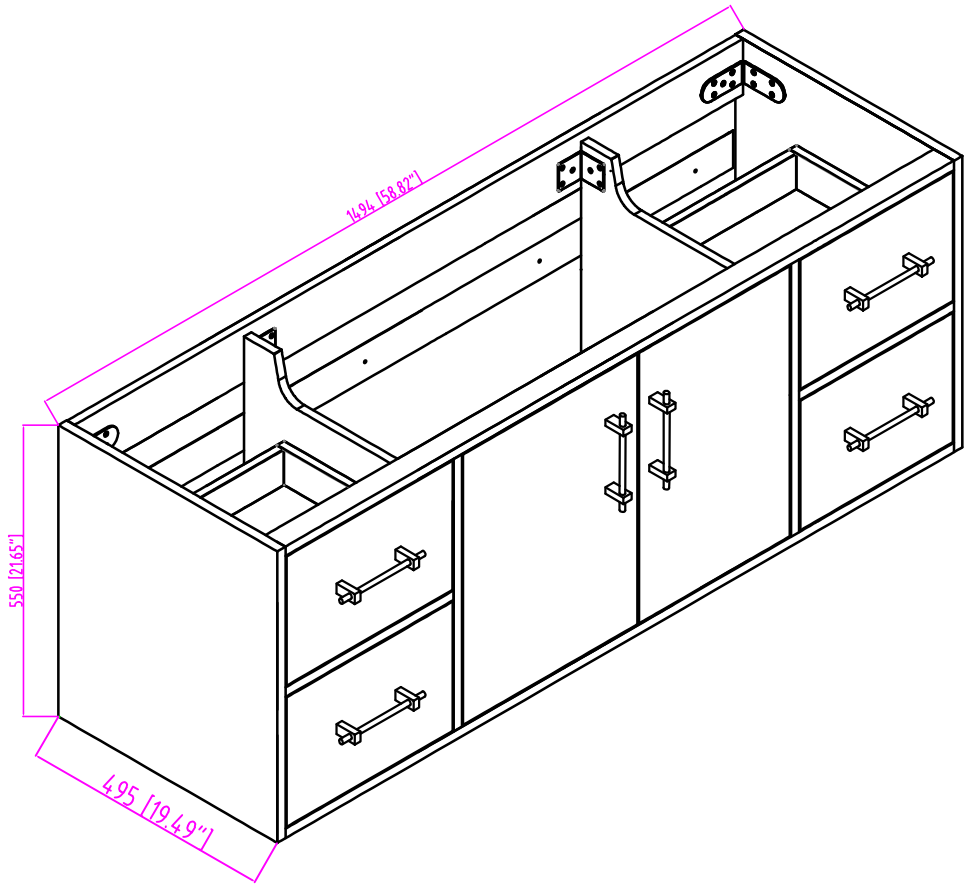

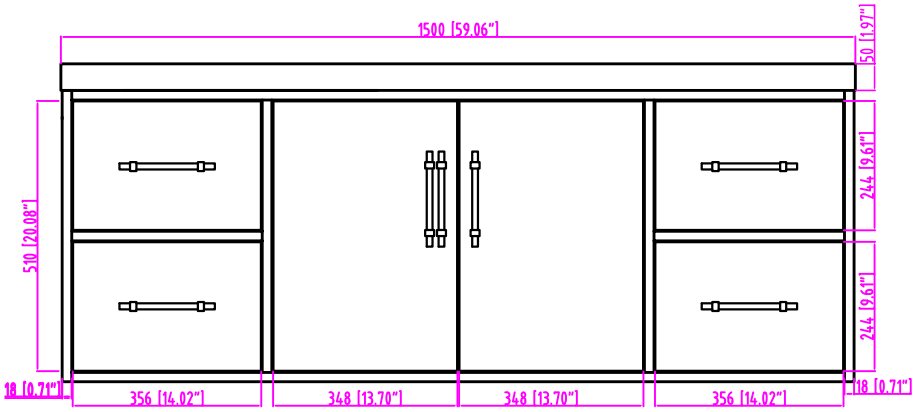

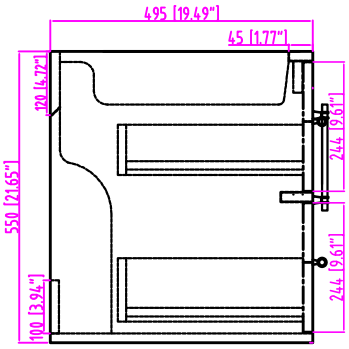

Victoria-60S