Assembly Instructions

COLLECTION : BUNGALOW
ITEM NO : G2746-21S
SWIVEL CLUB CHAIR

Thank you for purchasing this quality product. Be sure to check all packing materials carefully for small parts, which may have come loose inside the carton during shipment. Identify and count all items and compare with the PARTS LIST and/or HARDWARE LIST shown below.

STOP Please read the instructions thoroughly before assembly.

1. We recommend that you assemble this product with the assistance of another person; this will make the assembly easier, and will help eliminate damage to the product or injury to persons during assembly.
2. Please do not tighten screws or bolts until the assembly is completed.
3. To level the chairs or table, before tightening all the screws, the chairs or table must be placed on a flat surface and then tighten the screws.
4. Please put all parts on a non-abrasive floor before assembly and follow the assembly steps to assemble your newly purchased product correctly and efficiently.

PARTS LIST

NO.	DESCRIPTION	SKETCH	QTY
A	Chair Frame		1 PC
B	Swivel Base		1 PC

HARDWARE LIST

NO.	DESCRIPTION	SKETCH	QTY
1	Metal Plate		2 PCS
2	Hex Head Bolt (M8*45mm)		4 PCS
3	Flat Washer		4 PCS
4	Spring Washer		4 PCS
5	Nut		4 PCS
6	Wrench		2 PCS

Weight Capacity	300 lbs

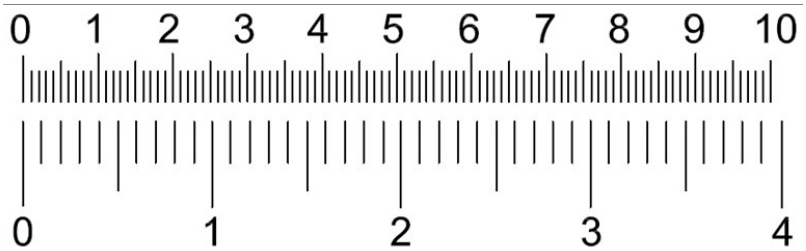

Created date: 12/19/2024
Revised date:

MADE IN CHINA

Assembly Instructions

COLLECTION : BUNGALOW

ITEM NO : G2746-21S

SWIVEL CLUB CHAIR

STEP 1

Place the swivel chair frame upside down on a soft and flat surface.
Assemble base (B) by using Wrench (6) with hardware 1, 2, 3, 4 and 5.
* Attention: DO NOT TIGHTEN THE BOLTS

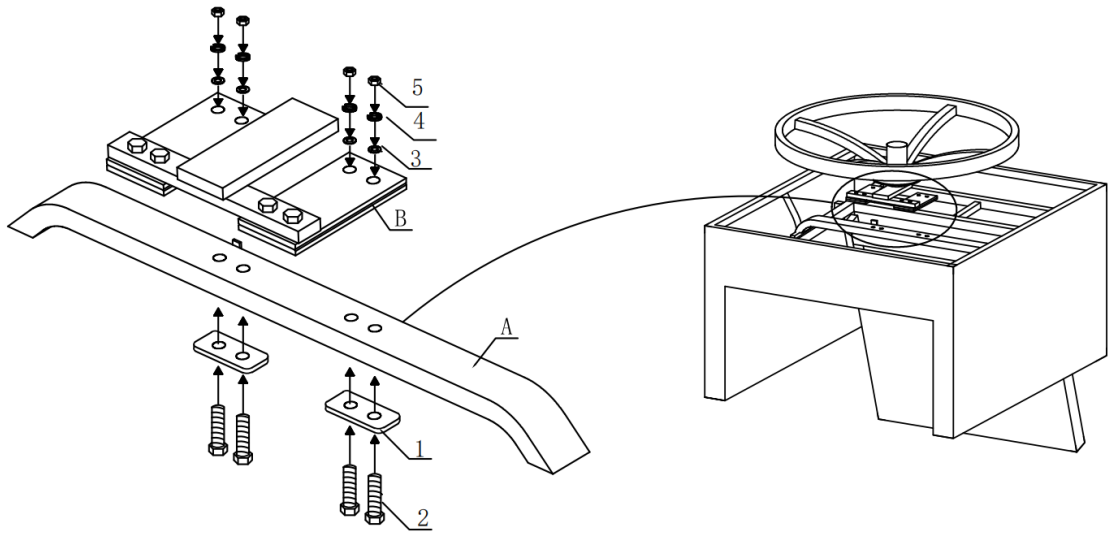

STEP 2

To level the swivel club chair, stand the chair up on a flat surface and tighten all the bolts by using wrench (6).

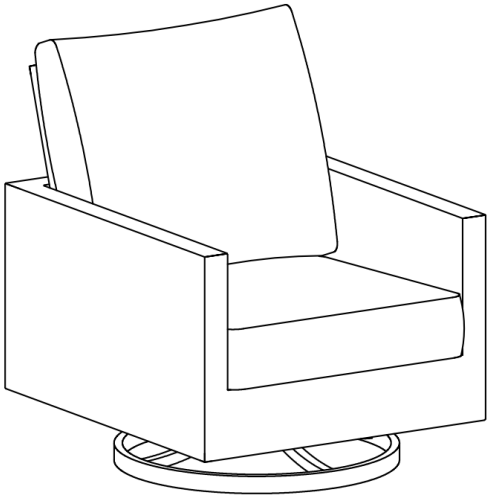

Fully Assembled Swivel Club Chair

Care and Maintenance

All outdoor furniture is subject to UV rays and weather elements. In order to keep your furniture as long lasting and vibrant as possible, we advise using furniture covers or storing the furniture when not in use.

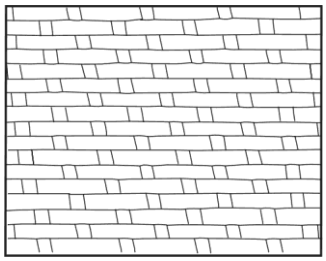

WICKER

Simply washing your wicker with a mild detergent and protecting it as much as possible by covering and or storing it when not in use for long periods of time is sufficient.

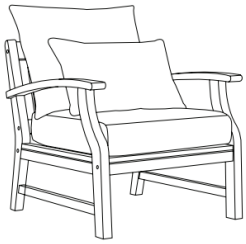

WOOD FRAMES

Make sure all surfaces are protected from heat and liquids. Wipe up spills immediately and do not place furniture next to a heat source such as radiators or fires. All timber surfaces may change color. Spray polishes are best to avoid as they contain silicones which may spoil the surface by building up overtime. Check bolts and screws regularly and tighten when necessary.

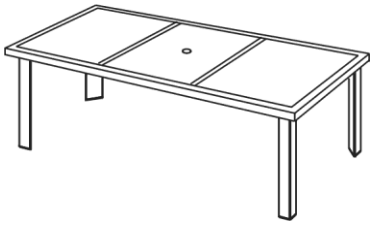

STONETOPS/TABLETOPS

Spills should be wiped up quickly to avoid any staining on the surface. Regular cleaning with mild soap and water with a sponge or soft scrub brush is all that is required. Storing or covering your natural stone top when not in use for extended periods of time is recommended.

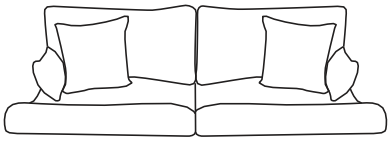

FABRICS

Wipe off spills with a cloth and water. Cushions may also be cleaned by hand with a mild solution of soap and water. Rinse the cushion cover thoroughly and allow to drip dry. The back cushion and pillow should be spot cleaned with a soft cloth.
Do not machine wash or tumble dry, as cushions may shrink.
Do not use bleach or solvents on fabrics. Never use cleaners that contain acid or abrasive materials.

Winterization:
Store your furniture inside during the winter. If this isn't possible, make sure it is covered.

Assembly Instructions

COLLECTION : BUNGALOW

ITEM NO : G2746-CT
COFFEE TABLE

Thank you for purchasing this quality product. Be sure to check all packing materials carefully for small parts, which may have come loose inside the carton during shipment. Identify and count all items and compare with the PARTS LIST and/or HARDWARE LIST shown below.

STOP Please read the instructions thoroughly before assembly.

1. We recommend that you assemble this product with the assistance of another person; this will make the assembly easier, and will help eliminate damage to the product or injury to persons during assembly.
2. Please do not tighten screws or bolts until the assembly is completed.
3. To level the chairs or table, before tightening all the screws, the chairs or table must be placed on a flat surface and then tighten the screws.
4. Please put all parts on a non-abrasive floor before assembly and follow the assembly steps to assemble your newly purchased product correctly and efficiently.

PARTS LIST

NO.	DESCRIPTION	SKETCH	QTY
A	Table Top		1 PC
B	Table Leg		2 PCS
C	Shelf	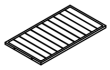	1 PC

HARDWARE LIST

NO.	DESCRIPTION	SKETCH	QTY
1	Bolt M6*20MM		8 PCS
2	Bolt M6*35MM		4 PCS
3	Flat Washer		12 PCS
4	Allen Key M6		1 PC

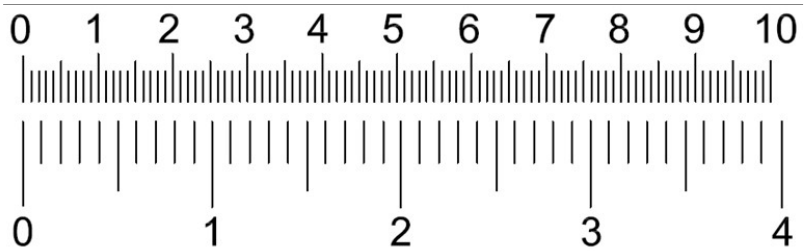

Created date: 12/19/2024
Revised date:

MADE IN CHINA

Assembly Instructions

COLLECTION : BUNGALOW

ITEM NO : G2746-CT
COFFEE TABLE

STEP 1
Place the table top upside down on a soft and flat surface.
Assemble table leg (B) by using Allen Key (4) with hardware 1 and 3.
* Attention: DO NOT TIGHTEN THE BOLTS

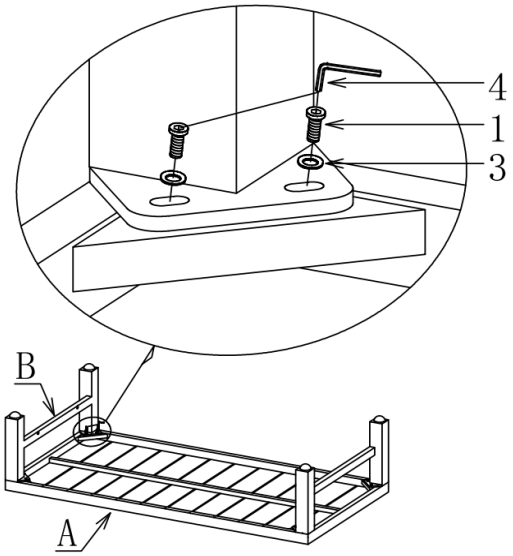

STEP 2
Assemble shelf (C) by using Allen Key (4) with hardware 2 and 3.
* Attention: DO NOT TIGHTEN THE BOLTS

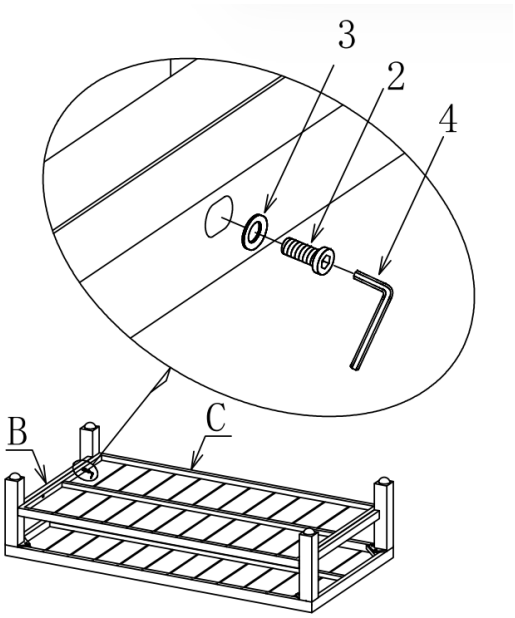

STEP 3
To level the table, stand the table up on a flat surface and tighten all the bolts by using Allen Key (4).

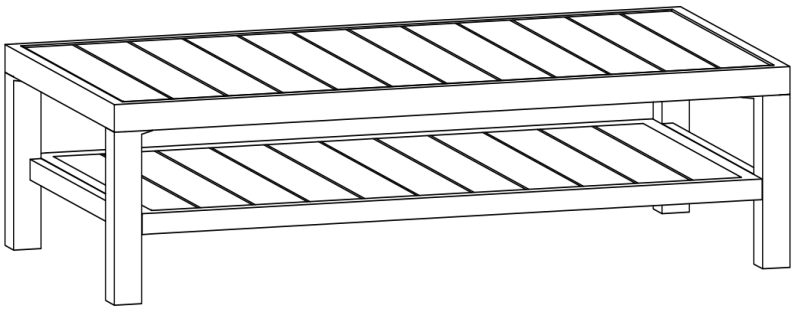

Fully Assembled Table

Created date: 12/19/2024
Revised date:

MADE IN CHINA

Care and Maintenance

All outdoor furniture is subject to UV rays and weather elements. In order to keep your furniture as long lasting and vibrant as possible, we advise using furniture covers or storing the furniture when not in use.

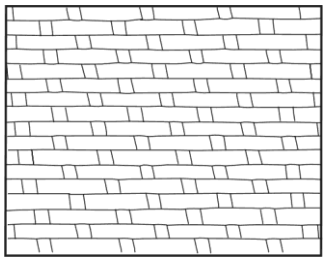

WICKER

Simply washing your wicker with a mild detergent and protecting it as much as possible by covering and or storing it when not in use for long periods of time is sufficient.

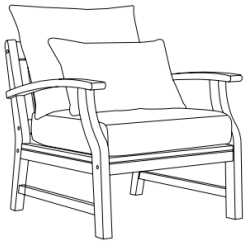

WOOD FRAMES

Make sure all surfaces are protected from heat and liquids. Wipe up spills immediately and do not place furniture next to a heat source such as radiators or fires. All timber surfaces may change color. Spray polishes are best to avoid as they contain silicones which may spoil the surface by building up overtime. Check bolts and screws regularly and tighten when necessary.

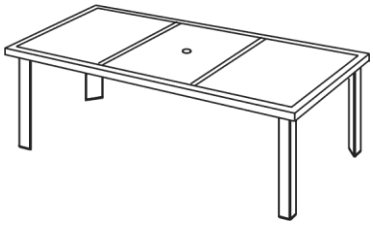

STONETOPS/TABLETOPS

Spills should be wiped up quickly to avoid any staining on the surface. Regular cleaning with mild soap and water with a sponge or soft scrub brush is all that is required. Storing or covering your natural stone top when not in use for extended periods of time is recommended.

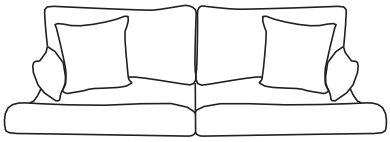

FABRICS

Wipe off spills with a cloth and water. Cushions may also be cleaned by hand with a mild solution of soap and water. Rinse the cushion cover thoroughly and allow to drip dry. The back cushion and pillow should be spot cleaned with a soft cloth.
Do not machine wash or tumble dry, as cushions may shrink.
Do not use bleach or solvents on fabrics. Never use cleaners that contain acid or abrasive materials.

Winterization:
Store your furniture inside during the winter. If this isn't possible, make sure it is covered.