# SPEC SHEET

## 60 in. Commercial Ice Cream Display Freezer, 16 Cu. Ft.

Model: MCF-16C

## FEATURES

- **Boost Impulse Sales Instantly:** A professional Koolmore Ice Cream Display Freezer makes frozen treats look cold, colorful, and irresistible.
- **Bright LED Interior Lighting:** Showcase the bright, delicious colors of your ice cream with a curved glass top and cool LED lighting that highlights every frozen treat and flavor.
- **Manual Defrost Design:** Helps prevent heavy ice buildup and makes it easy to keep the freezer clean, efficient, and ready for daily use.
- **Large Capacity Storage:** The spacious 16 cu. ft. interior lets you stock more best-selling ice cream while keeping everything organized and easy to access.
- **Easy Organization:** Includes 5 removable PVC-coated baskets so customers can quickly find their favorite frozen treats without digging around.
- **Portability:** Equipped with four casters, including two locking casters, for easy mobility and stability.
- **Consistent Cooling:** Maintains a consistent temperature range of -15°F to 32°F.
- **Easy-Clean Design With Built-In Drain:** Removes excess moisture during defrosting for faster, hassle-free maintenance.
- **ETL Certified and 1-Year Warranty:** Meets safety standards and includes full parts and labor coverage.

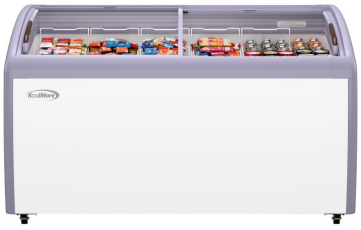

## CLOSE UP IMAGES

# Technical Specs

## Dimensions & Weight

| | |
|---|---|
| Length | 60.2 in. |
| Width | 27.7 in. |
| Height | 34.5 in. |
| Weight | 157 lbs. |
| Interior Depth | 21.2 in. |
| Interior Width | 54.4 in. |
| Interior Height | 23.2 in. |
| Minimum Back Air Clearance | 4 in. |
| Minimum Side Air Clearance | 4 in. |

## Electric & Certifications

| | |
|---|---|
| Voltage | 110 |
| Wattage | 282 |
| Hertz | 60 |
| Amps | 3.5 |
| Phase | 1 |
| Plug Type | NEMA 5-15P |
| Power Cord Include | Yes |
| Power Cord Length | 70.8 in. |
| Certifications | ETL Listed for Safety and Sanitation |

## Capacity

| | |
|---|---|
| Gross Cubic Feet | 16.2 |
| Net Cubic Feet | 11.6 |
| Individual Bin Capacity | 50 |
| Number Of Bins | 5 |

## Features & Materials

| | |
|---|---|
| Temperature Range | -15–32 °F |
| Ambient Temperature Range | 0–100 °F |
| Cooling Unit Type | Static |
| Defrost Type | Manual |
| Refrigerant Type | R-290 |
| Horsepower | 0.5 |
| Door Style | Sliding |
| Number of Doors | 2 |
| Temperature Control Type | Mechanical |
| Interior Lights | LED |
| Interior Lights Location | Front of Cabinet |
| Interior Material | Steel |
| Exterior Material | Durable White Powder Coated Steel |
| Shelf Material Type | PVC-Coated Baskets |
| Noise | 55 dB |
| Door Handles Color | Black |
| Door Material | Glass |
| Glass Type | Low-E Tempered |
| Drain Plug | Yes |
| Indoor Outdoor | Indoor |
| ADA Compliant | Yes |
| Casters | 4 |
| Compressor Location | Bottom |
| Safety Lock | Yes |

# Plan View

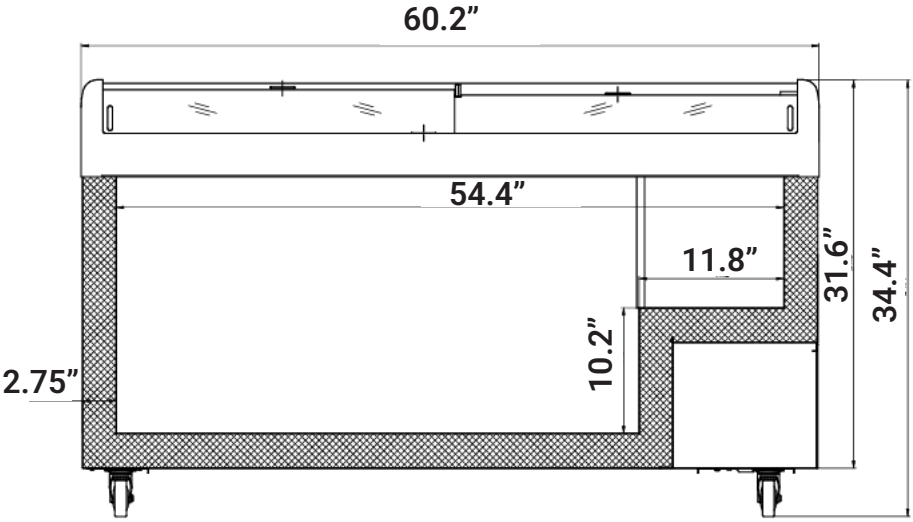


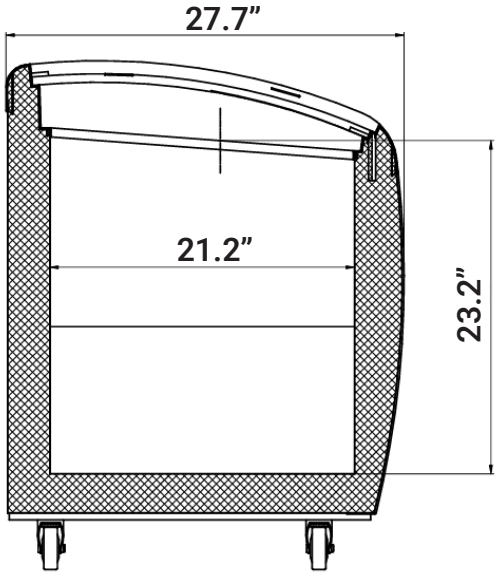


CERTIFICATIONS


718-576-6342
info@koolmore.com