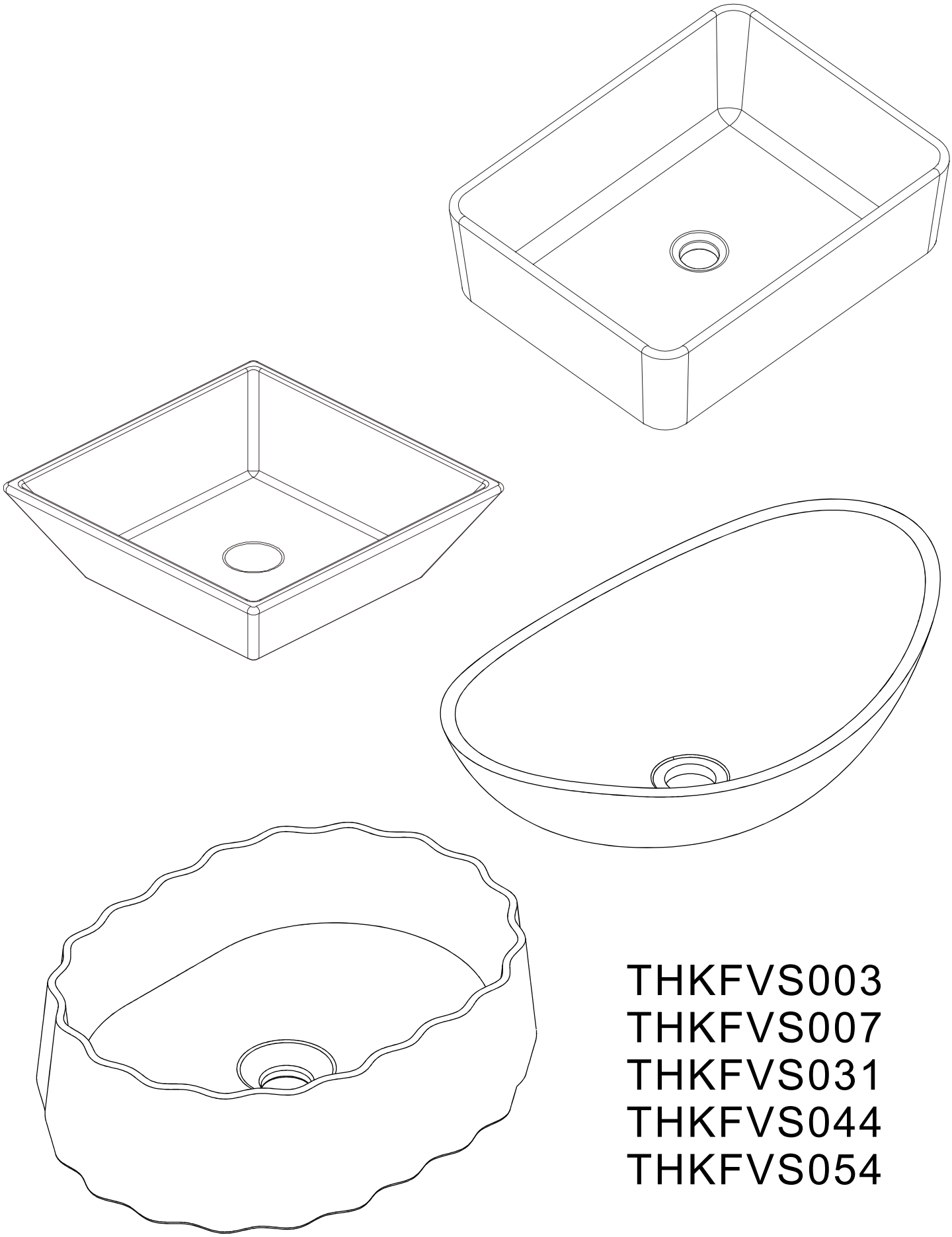

THKFVS003
THKFVS007
THKFVS031
THKFVS044
THKFVS054

INSTALLATION INSTRUCTIONS

DIMENSION

S007 | S003/S031 | S044 | S054

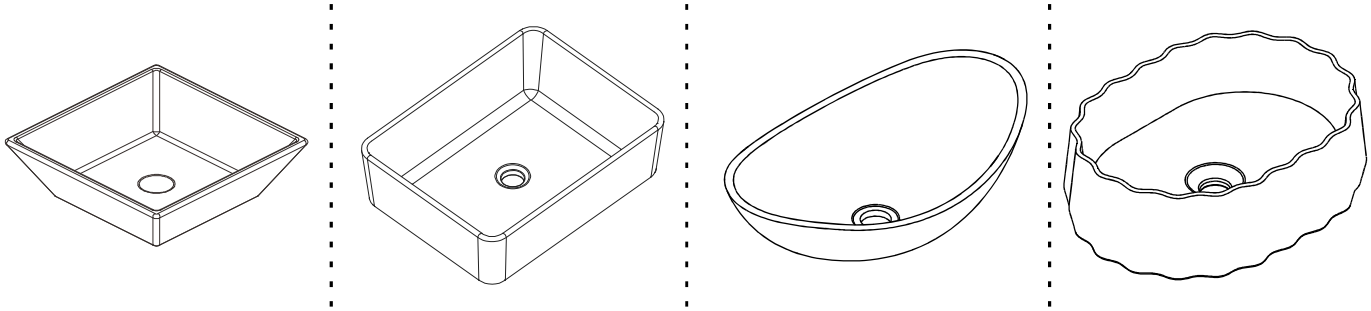

YOU MAY NEED (NOT SUPPLIED)

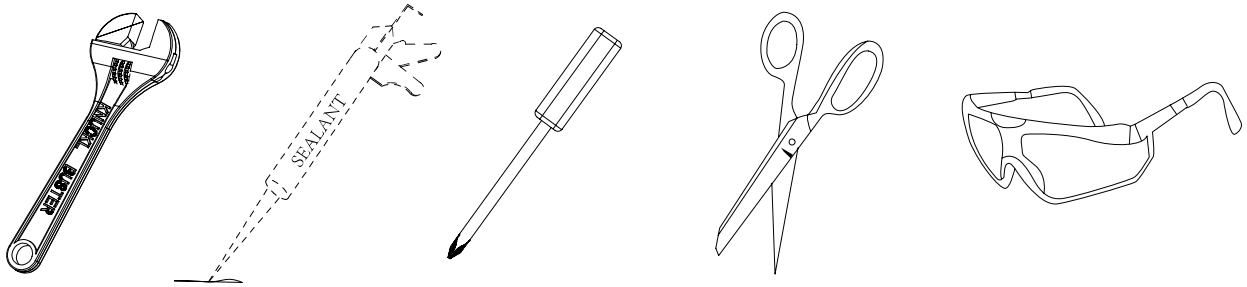

PARTS LIST

A 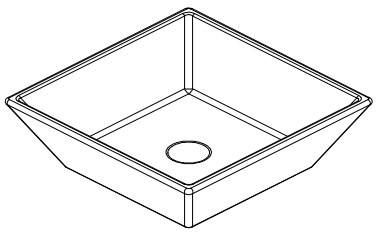 X1	B 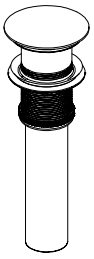 X1	C 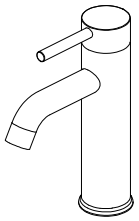 X1	D 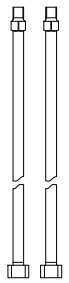 X1
E 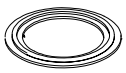 X1	F  X1	G 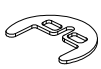 X1	H 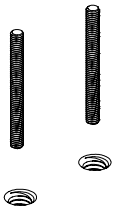 X1

CAUTION: Please confirm the parts list before installtion

INSTALLATION

STEP1

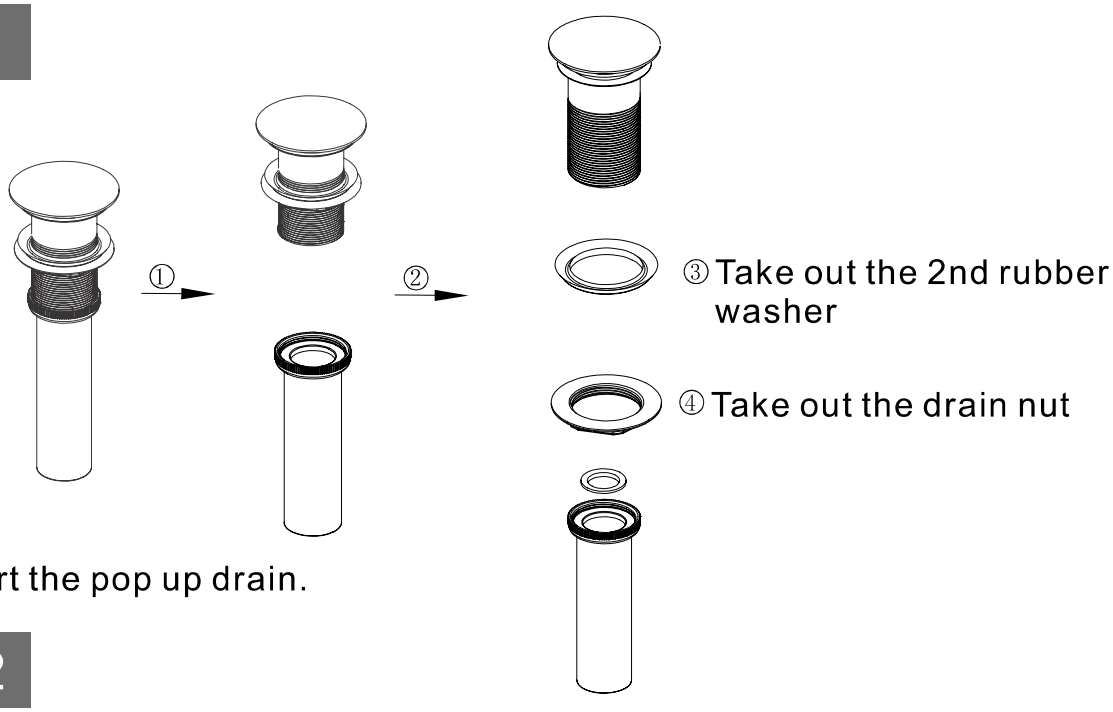

● Take apart the pop up drain.

STEP2

● Insert the drain top into the vessel. Install the thick rubber washer and then the drain nut. Tighten the drain nut and then the tall piece.

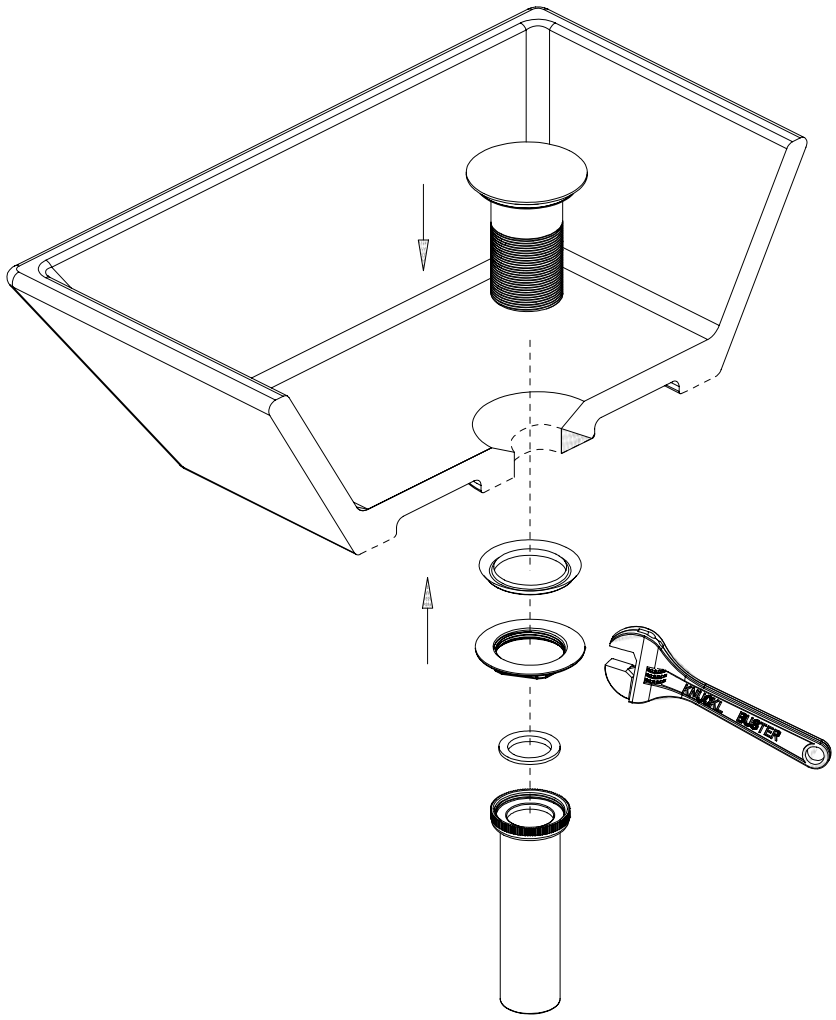

STEP3

● Loosely apply sealant to the ottom installation area.

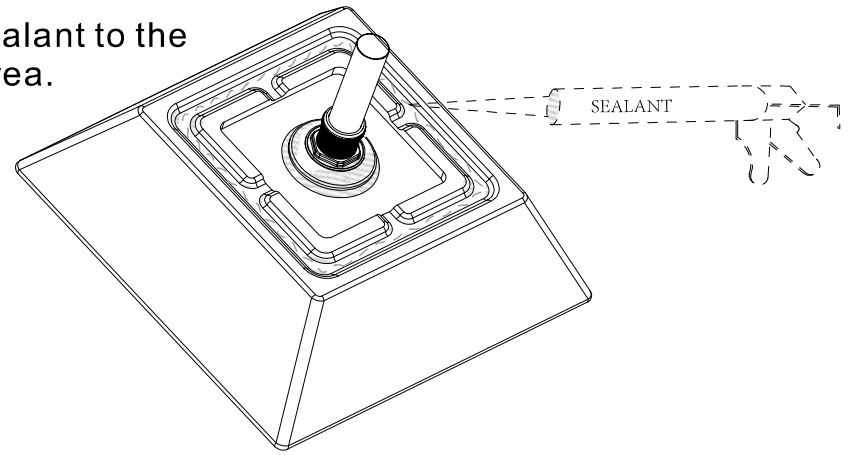

STEP4

● Carefully position the vessel on the tabletop and press down frmly. Immediately wipe away any excess sealant, and fll any voids as needed.

CAUTION: Please do not remove the vessel before drying and reserve a installtion space for the faucet.

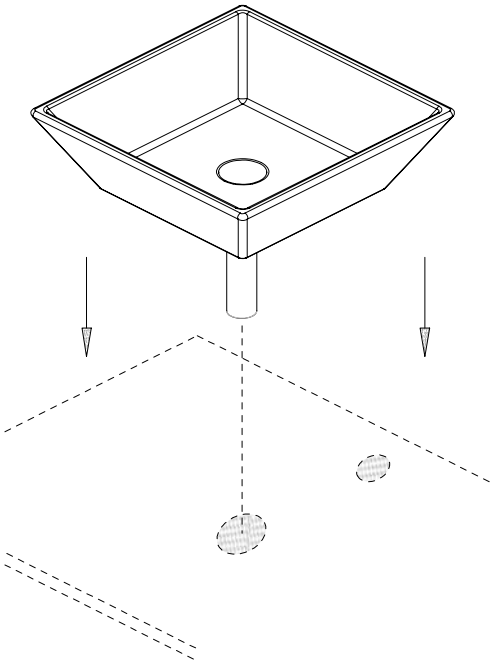

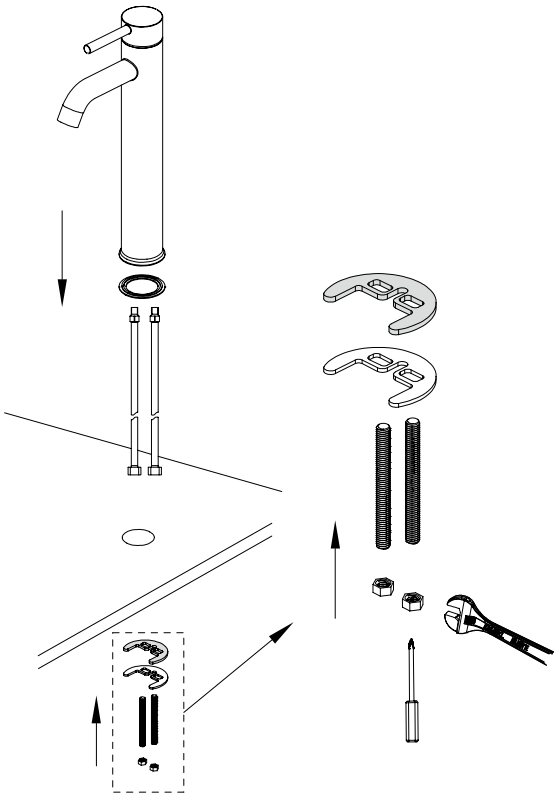

STEP5

● Position the gasket under the faucet. Connect the hot and cold water pipes to the faucet. Insert the faucet into the hole. Install the rubber gasket, then the metal gasket, then the fxing bolts. Tighten the fxing bolts.

STEP6

● Check the position and stableness of the vessel and faucet. Open the faucet valves, and check for leakage.

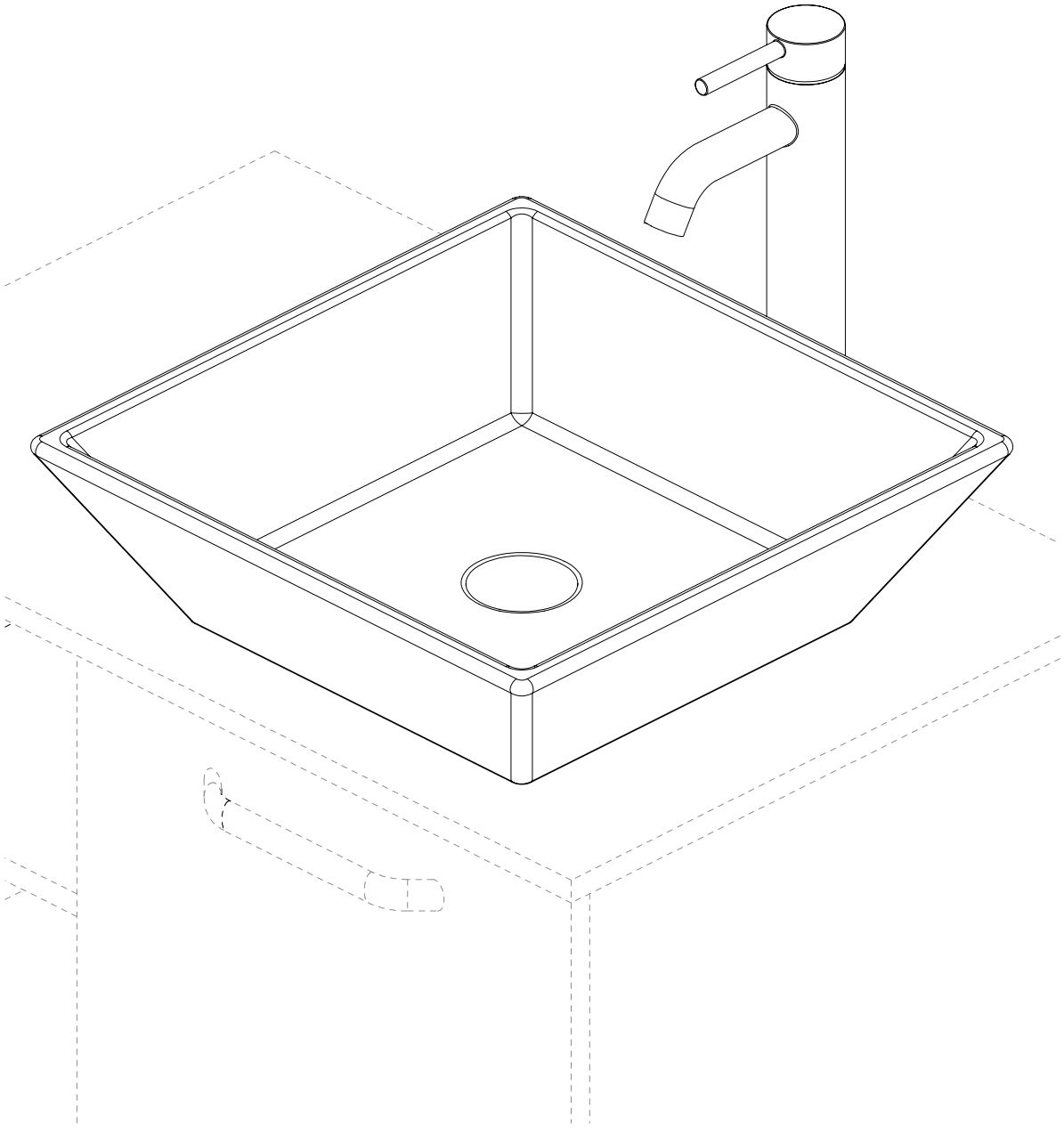

CARE AND CLEANING

To keep your ceramic vessel looking new, make sure you rinse it out thoroughly after each use. DO NOT USE ABRASIVES on this product, as they will scratch and ruin the surface. Stubborn stains, paint, or tar can be removed with turpentine or paint thinner.



Thank you very much for purchasing from us.

We have always been trying to provide the best service and reliable products for every customer.

We sincerely hope you will be satisfied with our products and leave us FIVE STARS and POSITIVE feedback/ review in our page.

However, accident may happen sometimes, please contact us to resolve any issue before leaving a negative feedback.

Many thanks and welcome to our shop again!

Contact number: (323) 393-8260
E-mail: service@eclifeusa.com