Bardon™ | K-4991-ETSS

High-Efficiency Urinal (HEU), washout, wall-hung, 0.125 gpf to 1.0 gpf, top spud, antimicrobial

Features

- Washout urinal
- 3/4" (19 mm) top spud
- 0.125 - 1.0 gpf (0.47 - 3.8 lpf)
- Will replace K-4904-ET
- Antimicrobial finish inhibits the growth of mold-, mildew-, stain-, and odor-causing bacteria on the fixture surface. This product does not protect users against bacteria, viruses, or other disease organisms. Always clean and wash this product thoroughly before and after each use



Sustainability

Available Colors/Finishes

Color tiles intended for reference only.

0 White

1-800-4KOHLER (1-800-456-4537)
Kohler Co. reserves the right to make revisions without notice to product specifications.
For the most current specification sheet, go to www.kohler.com USA or www.kohler.ca Canada.
3-27-2026 20:21 - US-CA

Codes/Standards

ADA, CSA B651 compliant when installed to the specific requirements of these regulations.
This product should be used with a WaterSense labeled counterpart with the same rated flush volume to ensure the complete system meets the requirements of this specification for water efficiency and performance.

ADA CSA B651

ASME A112.19.2/CSA B45.1
DOE - Energy Policy Act 1992
EPA WaterSense®
California Energy Commission (CEC)
ADA
ICC/ANSI A117.1
CSA B651

Technical Information

All product dimensions are nominal.

Spud size:	Inlet, Top
Trapway Type:	Exposed
Flush Rate:	0.125 or 1.0 gpf (0.5 or 3.8 lpf)

Designed for the above water use when installed with a water-saving flushometer.

Material

- Vitreous china

Warranty

See website for detailed warranty information.

KOHLER® One-Year Limited Warranty

1-800-4KOHLER (1-800-456-4537)
Kohler Co. reserves the right to make revisions without notice to product specifications.
For the most current specification sheet, go to www.kohler.com USA or www.kohler.ca Canada.
3-27-2026 20:21 - US-CA

THE BOLD LOOK OF KOHLER.

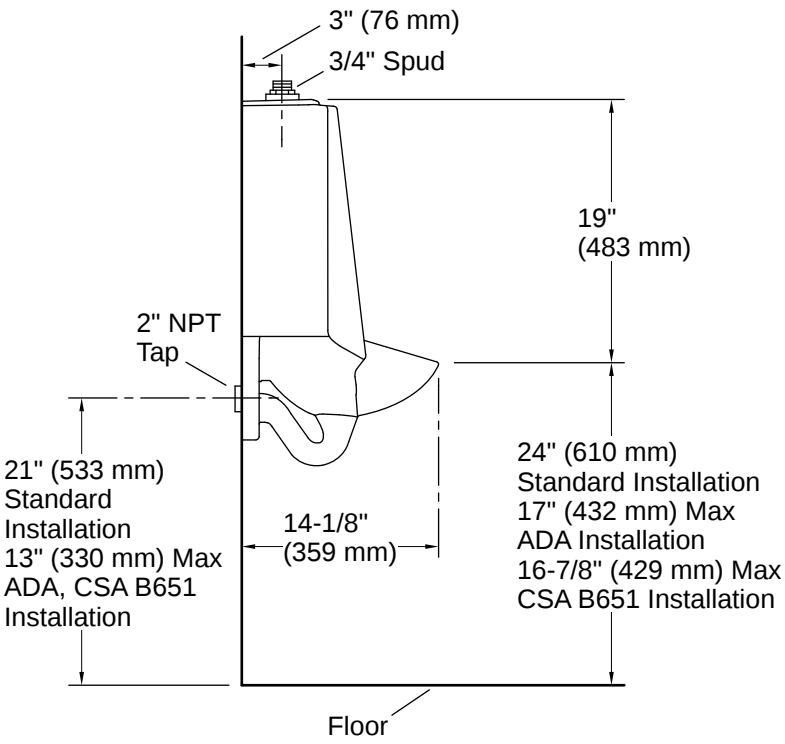

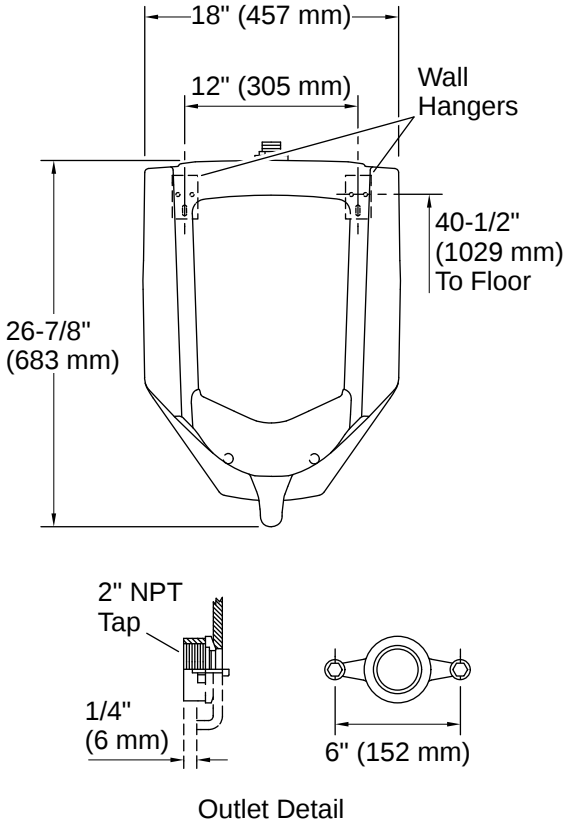

Outlet Detail

Installation

- 14" (356 mm) extended rim

Installation Notes

Install this product according to the installation instructions.

Refer to manufacturer's instructions and local codes for flushometer requirements.
Product dimensions are nominal and may vary per ASME A112.19.2 tolerances.
This product should be used with a WaterSense labeled counterpart with the same rated flush volume to ensure the complete system meets the requirements of this specification for water efficiency and performance.
ADA, CSA B651 compliant when installed to the specific requirements of these regulations.

1-800-4KOHLER (1-800-456-4537)
Kohler Co. reserves the right to make revisions without notice to product specifications.
For the most current specification sheet, go to www.kohler.com USA or www.kohler.ca Canada.
3-27-2026 20:21 - US-CA

THE BOLD LOOK OF KOHLER