Thank you for your purchase!

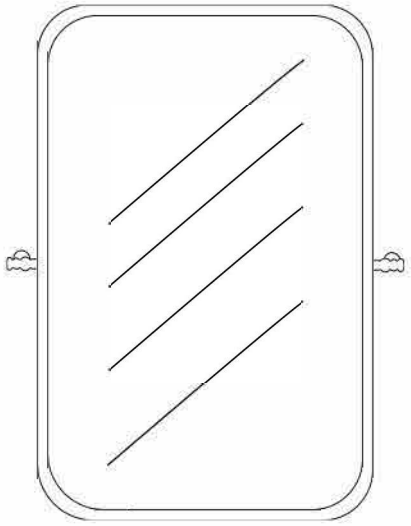

Wall Mount Pivot Mirror

ASSEMBLY INSTRUCTIONS

Before You Begin: Power drill, drill bit, pencil and tape, and Phillips screwdriver required (Not Included).

Please identify all component parts and hardware pieces required before you begin. Carefully remove all of the components from the packaging and set aside for assembly. Assemble on a soft surface to prevent scratching during assembly.

Caution:

Tighten all components securely before use. Failure to do so may result in personal injury.
DO NOT use any sharp objects to open plastic wrapped components as damage to product or components may result.

Warning:

CHOKING HAZARD - Small Parts. Adult Assembly Required.

Injury may result from tipping furniture. You must install the Tipping Restraint Hardware with the unit to prevent tne unit from tipping and causing any accidental injury, instability, death or damage. The tipping restraint is intendecfonly as a safety measure, it is not a substitute for proper adulf supervision.

This tipping restraint is not an earthquake restraint. If you wish to add the extra security of earthquake restraints, they must be purchased and installed separately.

Serious or fatal crushing injuries can occur from furniture tipping over. To prevent furniture from tipping over it must be permanently fixed to the wall. Fixing devices for the wall are not included since 9ifferent waifmaterials require different types of fixing devices. Use fixing devices suitable for the walls 1n your home.

Failure to detach this restraint before moving furniture may result in injury or damage.
DO NOT ALLOW CHILDREN TO CLIMB ON FURNITURE

Customer Service Email: CustomerExperience@theubiquegroup.com I Phone: 866-552-2810

196861182808/196861182792

Congratulations!

You just purchased a piece of happiness. At Ubique Group, we believe you can transform your spaces into the most inspired places with furnishings that are the perfect combination of form, function and style. As original innovators of online furniture retail, we offer the best selection of popular, contemporary styles at cool, comfortable prices. And, with decades of proven shipping and packaging expertise, our Extended Quality Checklist ensures a rewarding, hassle-free experience time and time again. It's just what you need to bring your vision to life.

Thank you & Enjoy!!

your friends at Ubique Group

LIKE IT!

Share it on social & Tell a friend! #Spaces2Places

LOVE IT!

Write an online product review where purchased

NOT SURE?

Let us help! Contact our customer support.

Have a question, concern or simply need a hand? Your satisfaction is our top priority.
Contact us at 866-552-2810 or customerexperience@theubiquegroup.com. We're here to help!

Browse Our Branded Collections

There's something for everyone inside our family of brands.

FLASH FURNITURE®

MERRICK | LANE

Taylor & Logan

Emma+Oliver®

MASADA RUGS

HBCY CREATIONS

BlackArc®

Visit www.theubiquegroup.com/brands or scan this code.

ubique.
GROUP

We pride ourselves on providing an excellent customer experience starting right here with your package and instructions. Everything you need should be right where you need it, so you can get to enjoying your new item ASAP. But despite our best efforts, sometimes "slips happen." If you need any support, from replacement parts to recommendations, please reach out to our wonderful customer support team at 866-552-2810 or customerexperience@theubiquegroup.com. We're here to help!

EVERY UBIQUE GROUP PRODUCT

Quality & Durability Tested

Packaged with Care

Shipped from our U.S. Facility

Designed for Easy Assembly

Ethically Sourced

Please visit https://www.theubiquegroup.com/warranty for complete warranty information.

Read this manual before using this product. Failure to follow the instructions and safety precautions in this manual can result in serious injury or death. Keep this manual in a safe location for future reference.

ASSEMBLY INSTRUCTIONS

PARTS LIST

NO.	Mirror	Q'TY	NO.	Left Bracket	Q'TY	NO.	Template	Q'TY	NO.	Right Bracket	Q'TY
A		1PC	B		1PC	C		1PC	D		1PC
NO.	**Screw**	**Q'TY**	**NO.**	**Wall Anchor**	**Q'TY**	**NO.**	**Mini Level**	**Q'TY**	**NO.**	**Allen Wrench**	**Q'TY**
E		4PCS + 1PCS extra	F		4PCS + 1PCS extra	G		1PC	H		1PC

STEP 1

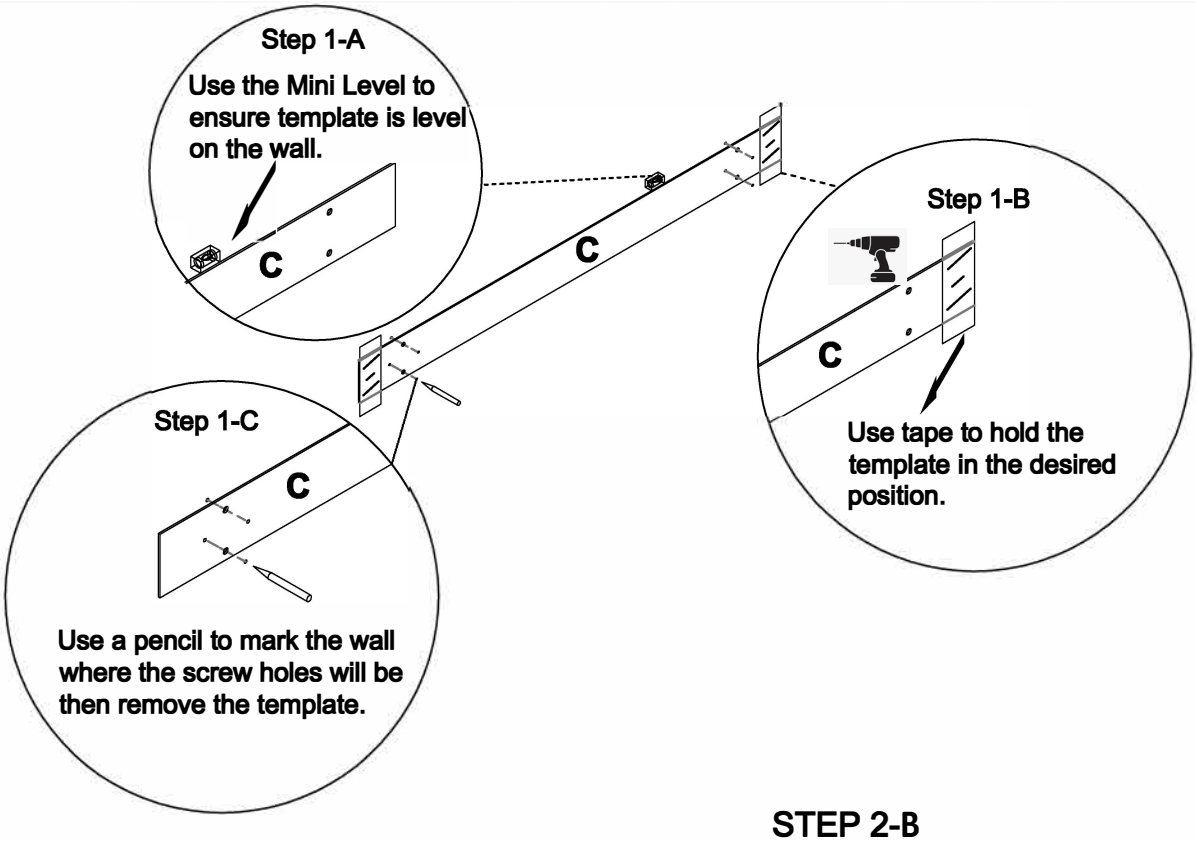

STEP 2-A

Using a power drill and drill bit, drill the pilot holes into the wall where marked in Step 1.

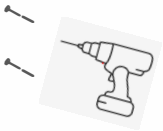

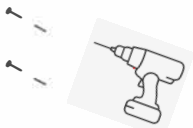

STEP 2-B

Insert wall anchors

STEP 3

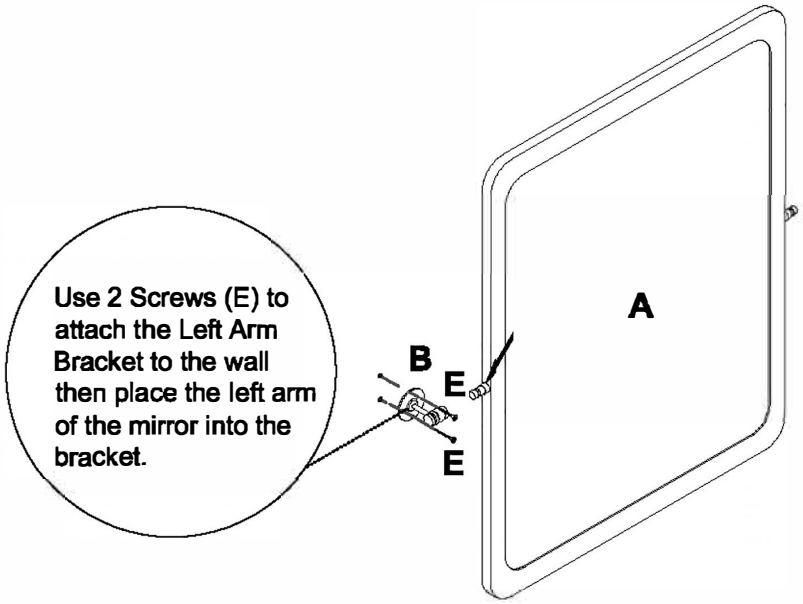

NOTE:Mirror must be held in position until the right arm bracket is attached to the wall.

STEP 4

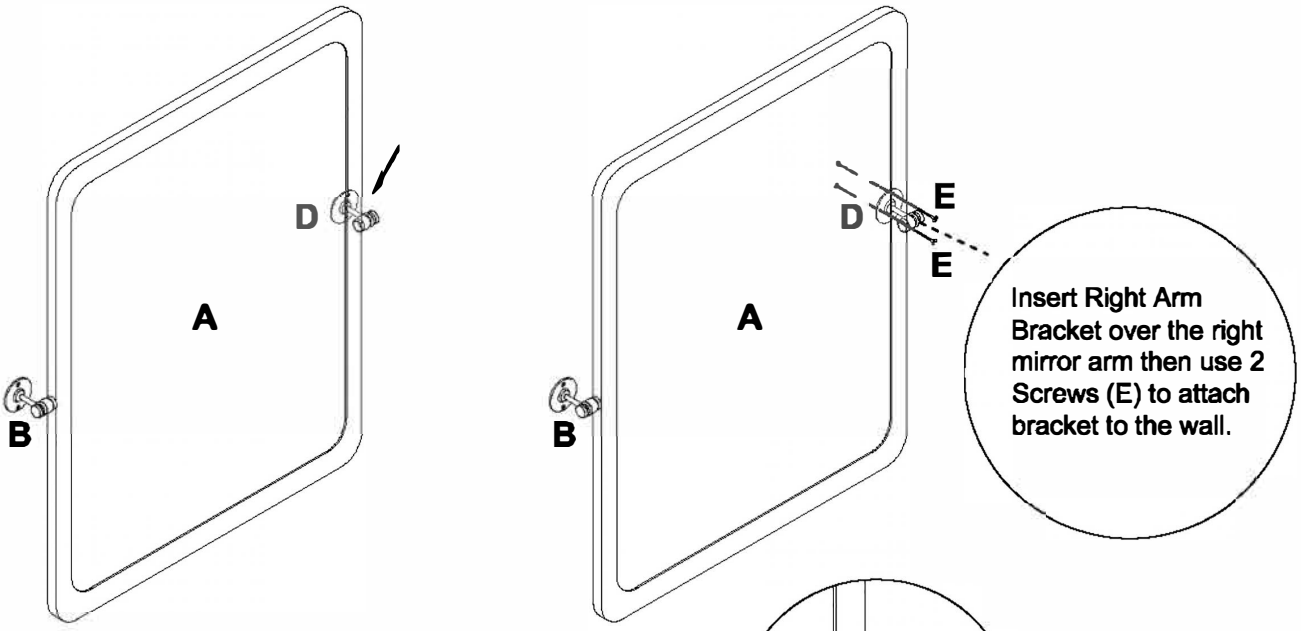

STEP 5

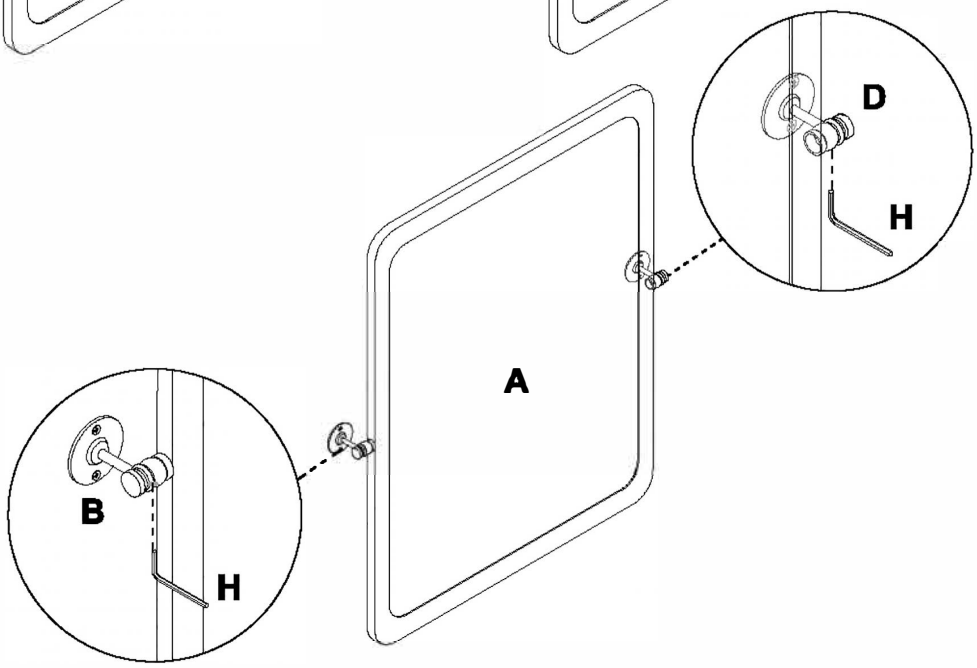

Loosen the set screw, adjust the mirror to your desired position, then tighten the set screw.

Quality and Safety Guidelines:

- For maintenance instructions and replacement parts, please email us at customerexperience@theubiquegroup.com or call 866-552-2810.
- Intended for indoor use only.
- Carefully follow assembly and use instructions and instructions for hanging the product on the wall. It is important to use the correct wall anchors or screw into wall studs.
- Please inspect this product regularly to make sure there are no damaged or worn parts. Also inspect to make sure all hardware is tightened correctly and securely. For inspection instructions, please email us at customerexperience@theubiquegroup.com or call 866-552-2810.
- For maintenance instructions and replacement parts, please email us at customerexperience@theubiquegroup.com or call 866-552-2810.
- If any parts are damaged or worn, please stop using the product. Repair this product with manufacturer supplied parts only.
- For product longevity, product safety and product integrity, store indoors in a dry location. For additional storage instructions, please email us at customerexperience@theubiquegroup.com or call 866-552-2810.
- Please visit www.theubiquegroup.com for our product warranty details or email us at customerexperience@theubiquegroup.com or call 866-552-2810.
- Please review and retain all assembly instructions, safety and quality guidelines and product warnings for future reference.