BEFORE FIRST USE:

IMPORTANT

Before first use, allow the dehumidifier to stand upright for 24 hours.

During transit, the dehumidifier may have been tilted or laid on its side, which can cause internal fluids like compressor oil to move around. Letting it stand upright gives everything time to settle, ensuring the dehumidifier works properly from the start.

This is a normal precaution and does not indicate any issue with the dehumidifier.

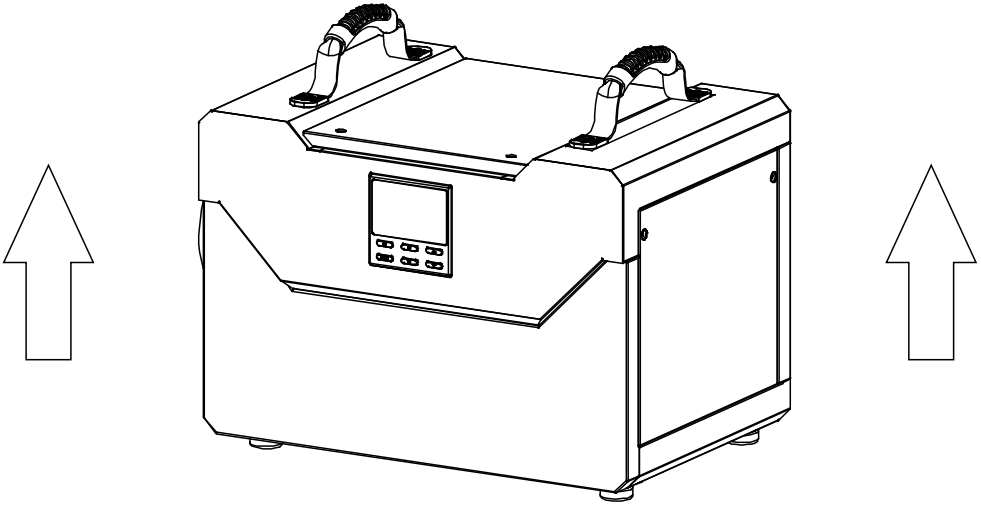

Parts Identification

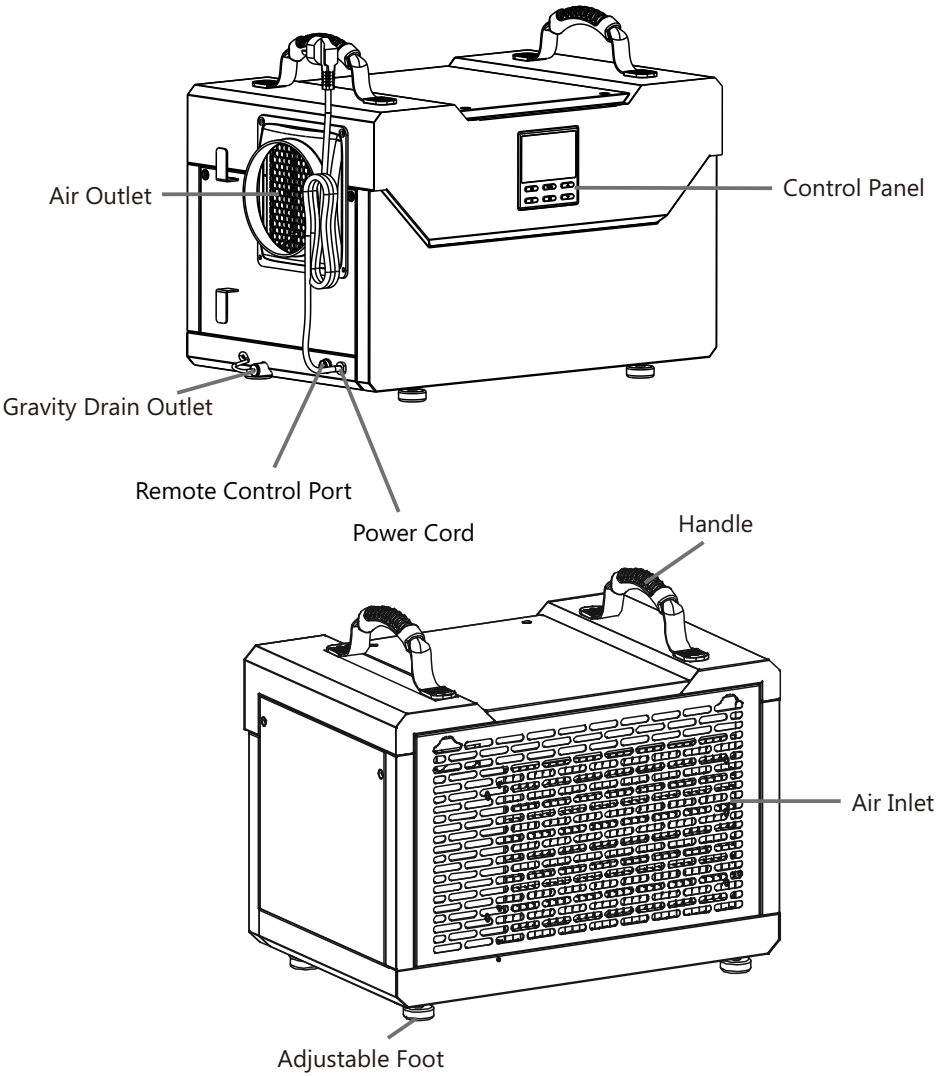

Note: Do not obstruct the air inlet and/or outlet.

Installation Instructions

1. Recommended Installations

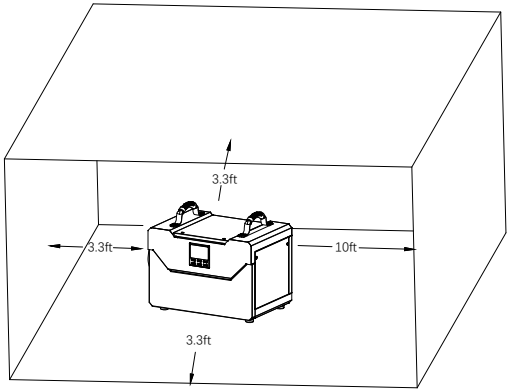

Adequate Clearance: Keep the air outlet at least 10 feet from obstacles and the air inlet at least 3.3 feet from obstacles.
Following the above recommendations will help prevent the discharged air from being drawn back into the unit, ensuring the dehumidifier operates effectively.

2. Position Your Dehumidifier

- Install the dehumidifier horizontally to minimize vibration and or noise.
- You can adjust the feet to level the dehumidifier.

To adjust the feet,
Turn the nut in a clockwise direction to get the nut loosen;

- Turn the foot in a clockwise direction to get the foot down or turn the foot in a counterclockwise direction to get the foot up;
- Turn the nut in a counterclockwise direction to fix the foot.

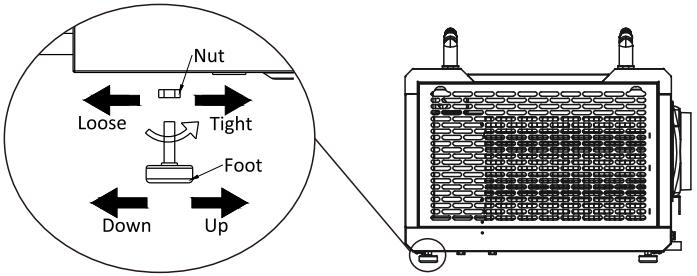

For optimal outcomes, please:

- Operate your dehumidifiers in an enclosed area.
- Close all doors and windows that open to the outside to maximize water removal efficiency.
- Place your dehumidifier away from obstructions, and keep it away from anything that could block airflow into and out of the unit.

3. Set up the Drainage System

- Attach one end of the drain hose to the Gravity Drain Outlet of the dehumidifier;
- Direct the hose to a suitable drainage facility.

Notes:

- Route the drain hose with a continuous downward slope.
- The hose may bend, but must not rise above the drain outlet.
- Avoid kinks, twists, or blockages. Improper routing may cause drainage failure.
- The unit may be elevated (while remaining level) to increase the downward slope for proper drainage.
- Route the hose to an appropriate drainage location, such as: floor drain, sink, condensate collection container, external condensate pump, and etc.

Operation Instructions

1. Control Panel Overview

The dehumidifier is equipped with an intuitive control panel featuring 6 buttons and a clear LED display, allowing easy monitoring and adjustment of operating settings.

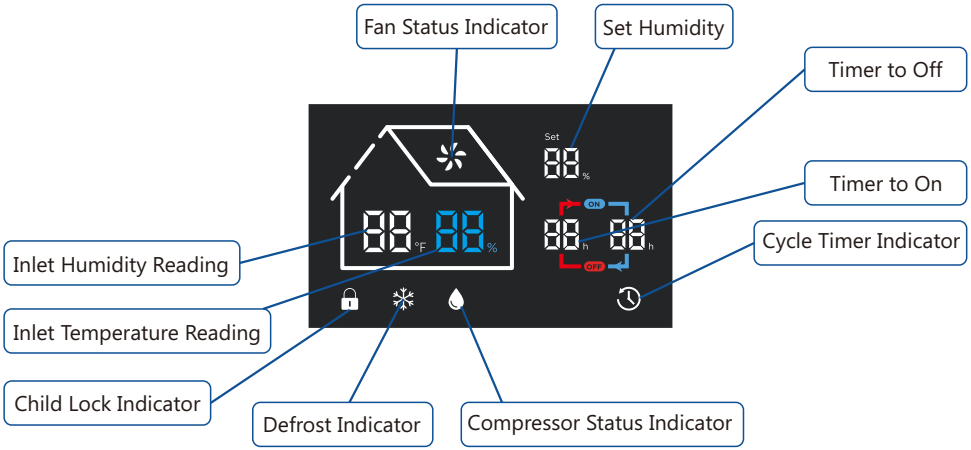

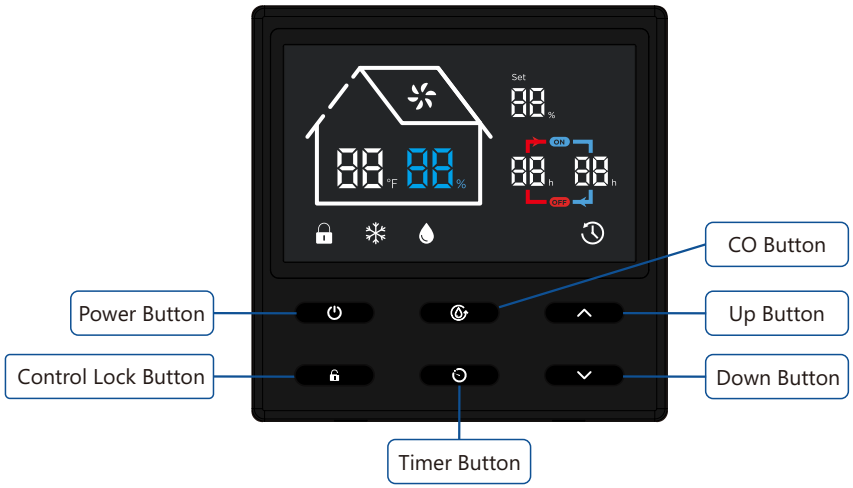

2. Turn On the Dehumidifier

Press the Power Button ⏻ to turn on the unit. Once powered on, the LED display will illuminate and show the current operating status.

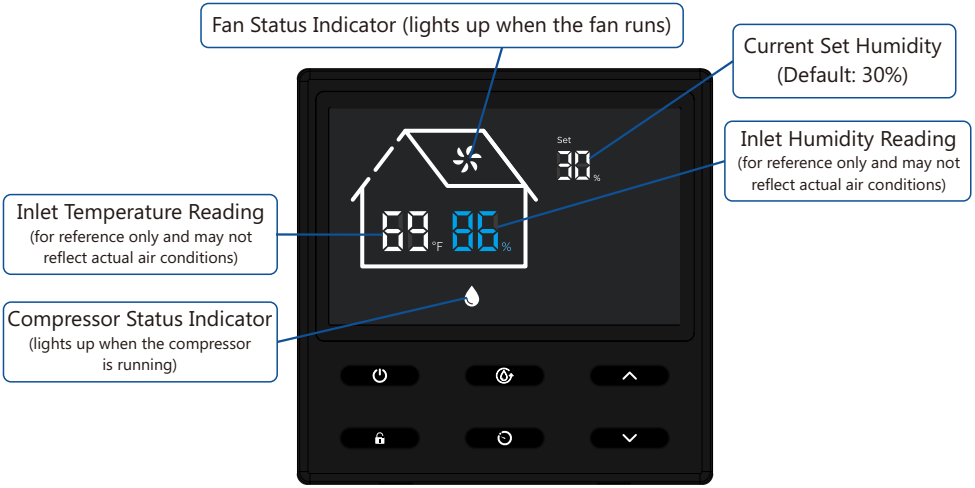

Notes:

(1) The dehumidifier will only operate when the set humidity is at least 3% lower than the inlet humidity reading.

(2) It is normal for the Compressor Status Indicator 💧 to remain off in the following situations:

- The unit has just powered on; the compressor may take a few seconds to start.
- The set humidity is not at least 3% lower than the inlet humidity.
- The inlet air humidity has reached the set humidity and the unit enters in standby mode.
- The compressor is in 3-minute delay protection after a recent restart.

(3) If no buttons are pressed for 30 seconds, the display will automatically dim. Press any button to wake the display.

3. Set or Adjust Target Humidity

(1) Check the inlet humidity reading 88% on the display.

(2) Adjust the Set Humidity Set 88% : Press the Up ∧ or Down ∨ button to select a target humidity between 10% and 90%, in 1% increments.

(3) Confirm the Setting: The value flashes during adjustment. After selecting, wait 5 seconds for the setting to register automatically.

(4) The dehumidifier will automatically cycle on/off to maintain inlet humidity within ±3% of the set humidity.

- When inlet air humidity drops to 3% below the set humidity, the dehumidifier enters in standby mode (the compressor and fan stop).
- When inlet air humidity rises to 3% above the set humidity, the dehumidifier automatically restarts and continues running until the humidity again reaches 3% below the set humidity.

Notes:

- The set humidity should be at least 3% (recommended 5%) lower than the inlet humidity reading. Otherwise, the dehumidifier will remain in standby mode until the inlet humidity rises 3% above the set humidity.
- Continuous Mode: Setting the humidity to 10% activates Continuous Dehumidification Mode. The display shows "Co", indicating continuous operation regardless of the inlet humidity level. Continuous Mode is intended for drying or restoration applications and is not recommended for normal comfort control.

4. Set Continuous Mode

Press button to activate the continuous mode. Once pressing the button, the Set Humidity will automatically set to 10%, and the display shows "Co", indicating continuous operation regardless of the inlet humidity level. Continuous Mode is intended for drying or restoration applications and is not recommended for normal comfort control.

5. Lock the Control Panel

To prevent accidental changes: Press and hold the Control Lock Button for 5 seconds to lock the control panel. The lock indicator will illuminate when control panel is locked. While lock the control panel, disabled except for unlocking. To unlock, press and hold the Control Lock Button for 5 seconds again. The lock indicator turns off when the control lock function is disabled.

6. Set a Timer

The unit supports three timer modes:
Timer to ON, Timer to OFF, and Cycle Time (ON & OFF).

Understanding the Timer Diagram

Red arrow line (OFF → ON) with the value in the middle: representing the **off duration** – Indicates how long the unit will remain **off** before it automatically turns on. The value countdown until the unit turns ON.

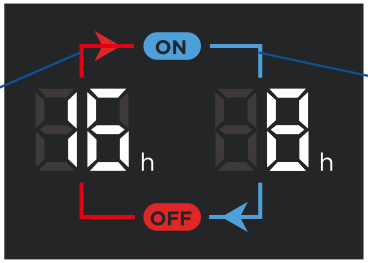

Blue arrow line (ON → OFF) with the value in the middle: representing the **on duration** – indicates how long the unit will remain **on** before it automatically turns off. The value countdown until the unit turns OFF.

General Timer Operation:

- Press or hold the Timer Button to select your desired timer mode.
- Adjust the duration using the Up ^ or Down v buttons.
- Settings will automatically start after 5 seconds if no further adjustments are made.
- The display shows a countdown that updates automatically. The unit will turn on or off automatically when the countdown ends.

Example: If Timer to OFF is set to 8 hours, after 1 hour the display shows 7 hours remaining.

(1) Timer to ON 

- When the unit is OFF, press the Timer Button once. The OFF→ON value (red line) flashes.
- Use Up ^ or Down v to set the off duration (1–24 hours).
- After 5 seconds, the timer starts automatically, and the display begins counting down.
- The unit will turn on automatically when the countdown ends.

Example: To turn the unit on in 3 hours, set the OFF→ON value (red line) to 3.

Note:

- When the unit turns on automatically via the Timer to ON function, it will operate using the previous settings, including set humidity.
- If Timer to ON is set to 0 hours, the timer function will not be enabled.
- Timer to ON executes only once. If the unit is turned on manually before the timer expires, the Timer to ON setting will be automatically canceled.

(2) Timer to OFF 

- When the unit is ON, press the Timer Button once. The ON→OFF value (blue line) flashes.
- Use Up ^ or Down v to set the **on** duration (1–24 hours).
- After 5 seconds, the timer starts automatically, and the display begins counting down.
- The unit will turn off automatically when the countdown ends.

Example: To turn the unit off in 8 hours, set the ON→OFF value (blue line) to 8.

Note:

- If Timer to OFF is set to 0 hours, the timer function will not be enabled.
- Timer to OFF executes only once. If the unit is turned off manually before the timer expires, the Timer to OFF setting will be automatically canceled.

(3) Cycle Timer (ON & OFF) 

- Press and hold the Timer Button for 5 seconds to enter Cycle Timer Mode. Both the ON and OFF values will illuminate on the display.
- The ON→OFF value (blue line) flashes first. Set the ON duration (1–24 hours) using Up ^ or Down v Button.
- Press the Timer Button again to set the **OFF** duration. The OFF→ON value (red line) flashes, and you can adjust it (1–24 hours).
- After 5 seconds, the timer starts automatically, and the display begins counting down.
- The unit will cycle continuously according to the set times.
- The starting cycle depends on the unit status when the timer is set:

– If set when the unit is ON, the timer starts with the OFF cycle and begins counting down.
– If set when the unit is OFF, the timer starts with the ON cycle and begins counting down.

Example: To have the unit run 8 hours ON and 16 hours OFF repeatedly:
• Set ON duration (blue line) = 8 hours
• Set OFF duration (red line) = 16 hours 
The display will show a countdown that updates automatically. This cycle will repeat continuously while in this mode.

Timer Modes – Quick Reference Table

Timer Mode	Applicable State	Setting Requirement	Operation Behavior	Execution Type	Power Loss Memory
Timer to OFF	Unit **ON**	Set ON→OFF value (blue line, 1–24 h)	Counts down the on duration, then automatically turns the unit off	**Single** execution	Yes
Timer to ON	Unit **OFF**	Set OFF→ON value (red line, 1–24 h)	Counts down the off duration, then automatically turns the unit on	**Single** execution	Yes
Cycle Timer (ON/OFF)	Unit **ON or OFF**	Set ON→OFF value (blue line, 1–24 h) and OFF→ON value (red line, 1–24 h)	Repeatedly cycles ON and OFF according to the set times, starting from its current state.	**Repeats** until timer is reset	Yes

Note: Manual power on/off overrides and clears all programmed timer settings.

7. Smart Functions

1) Compressor Delay Start

To protect internal components, the compressor includes a 3-minute delay after each cycle or power interruption. If the dehumidifier is restarted immediately, the compressor will resume operation after this 3-minute delay.

2) Auto Defrost

If the temperature drops below 65℉, frost may form on the coils, When this happens, the dehumidifier will automatically pause the compressor and run the fan to defrost. The Defrost icon will light up. Once the frost has cleared, the dehumidifier will resume normal operation.

3) Auto Restart

If a power outage occurs while the dehumidifier is running, it will automatically restart with the previous settings once power is restored.

Note: If a timer was active before the power outage, the timer will resume and continue counting down the remaining time after power is restored.