Lnstallation instructions

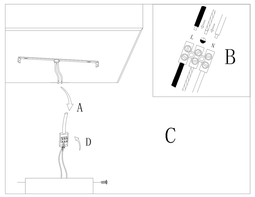

Specification: L800 * w300 * h 500 E14 * 8 fire

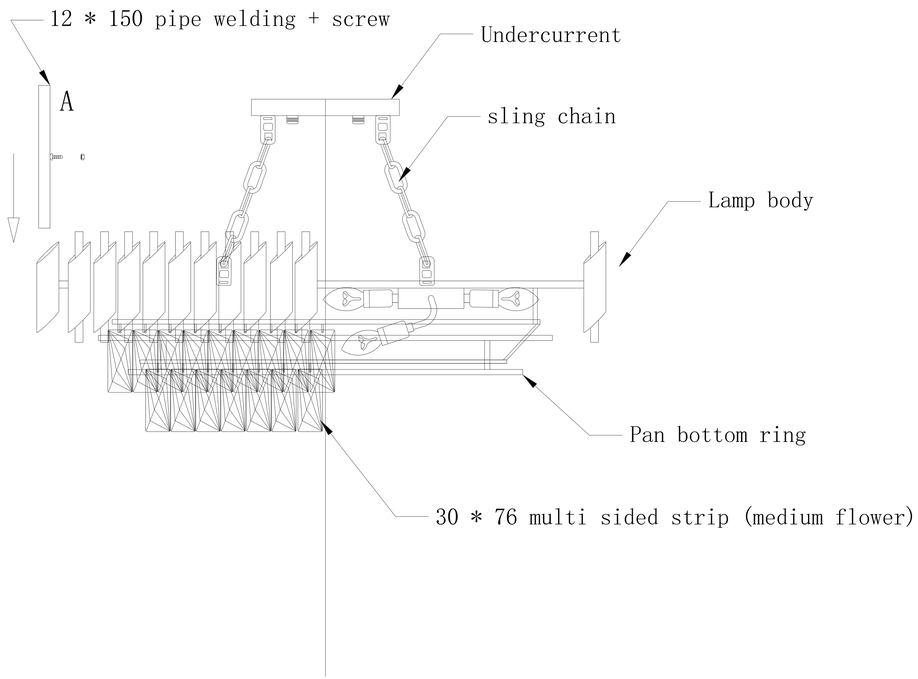

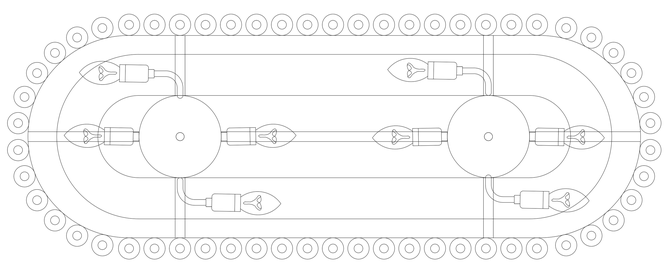

bill of materials

A	Ø12*150 pipe welding + screw	48
B	30 * 76 multi sided strip (medium flower)	96
C	Undercurrent	1
D	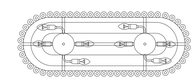 Lamp body	1
E	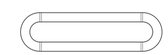 Pan bottom ring	1
F		
G		
H		

Installation Notes

1: Installing the Power Interface completely consistent, electricity screwed virtual connection will result in damage to electrical appliances.

2: Install the wear products installed gloves, to avoid slip injury lamp surface and the wire.

3: Make sure the lamp polarity installation accurately, otherwise so that it does not work, as well as its damage.

4: the product should not be close to acid, alkali and other corrosive chemi cals and gases, and electrical parts to waterCleaning, directly applicable to surface furniture cleaning agent. And the indoor temperature is not higher than 40 degrees.

5: Install the vulnerable parts, to ensure appropriate force, otherwise cause unnecessary damage

6: the light source is installed. Avoid direct skin contact with the light surface, otherwise it will affect their life.

7: cleaning, disconnect the power supply, the installation process must be done by a qualified electrician

8: Welcome to select products, the company dedicated to serve you!