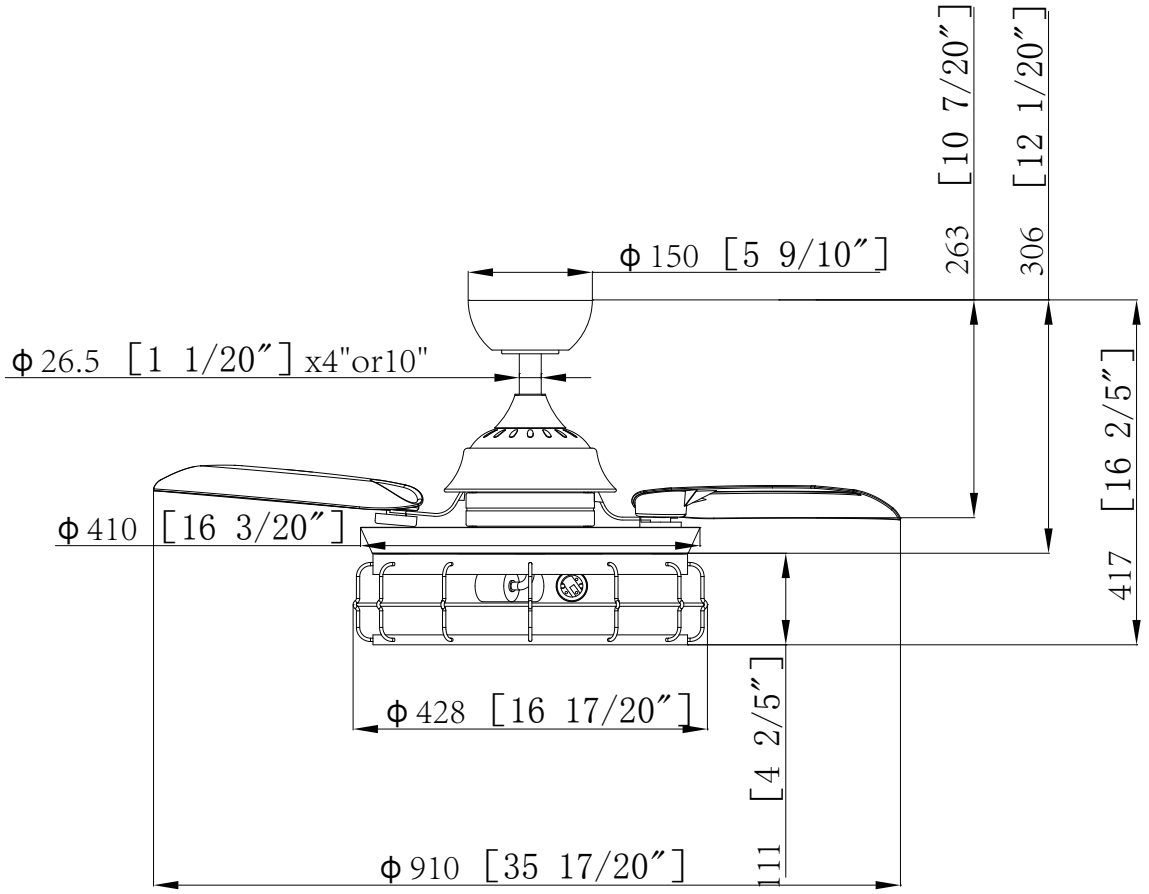
263 [10 7/20″]
306 [12 1/20″]
ϕ150 [5 9/10″]
ϕ26.5 [1 1/20″] x4"or10"
417 [16 2/5″]
ϕ410 [16 3/20″]
ϕ428 [16 17/20″]
111 [4 2/5″]
ϕ910 [35 17/20″]

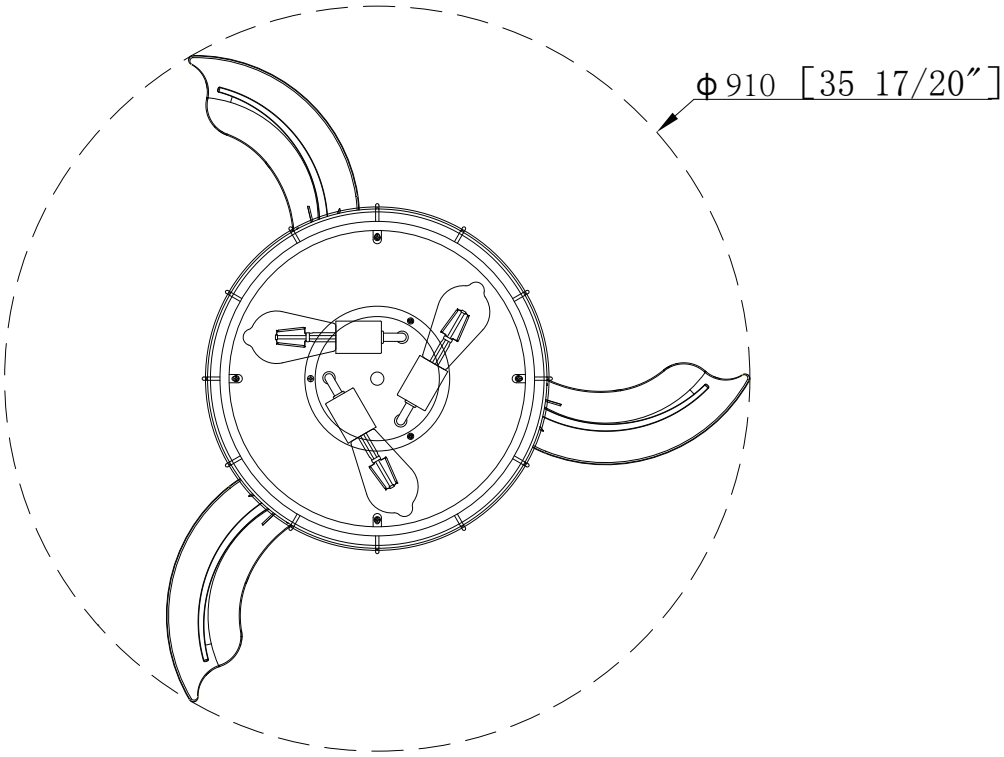
ϕ910 [35 17/20″]