Instruction Manual

Outdoor Wall Light

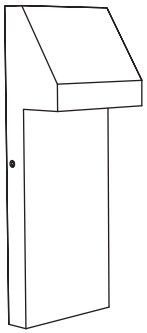

PACKAGE CONTENTS

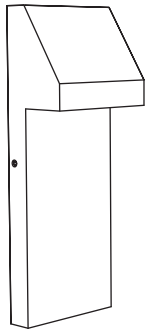

A

PART	DESCRIPTION	QUANTITY
A	Fixture	1

HARDWARE CONTENTS(shown actual size)

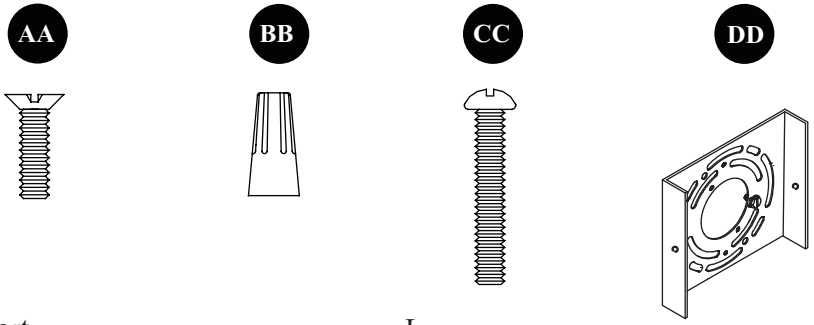

Short monting screw x 2

Wire nut x 3

Long monting screw x 2

Mounting plate (Not actual size) x 1

⚠ WARNING

- TURN OFF ELECTRICITY at main fuse box (or circuit breaker box) before beginning installation by removing fuse (or switching off circuit breaker).
- MINIMUM 90°C SUPPLY CONDUCTORS.

PREPARATION

Before beginning assembly of product, make sure all parts are present. Compare parts with package contents list and hardware contents list. If any part is missing or damaged, do not attempt to assemble the product.

Estimated Assembly Times: 25 minnutes

Tools Required for Assembly (not included): Flathead screwdriver , Phillips screwdriver, Pliers, Electrical tape, Wire cutters, Safety glasses.

Helpful Tools (not included): Wire strippers, Step ladder.

CAUTION: To avoid any waterproofing problems, please make sure the light fixture fits the mounting surface perfectly installation and use waterproof glue around the canopy for better sealing after installation.

Customer Service: service@24h-reply.com

Print in china

ASSEMBLY INSTRUCTIONS

1. Attach the mounting plate (DD) to the outlet box (not included) with the long mounting screws (CC).

Hardware Used

CC Long mounting screw  x 2

DD Mounting plate  x 1

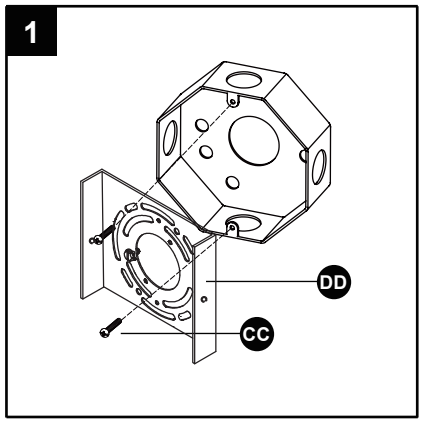

2. Strip 3/4 in. of insulation from wire ends. Twist stripped ends together with pliers (not included), black to black (power) and white to white (neutral). Attach copper wire to ground wire. Helpful hint: If necessary, attach copper ground wire to grounded outlet box.

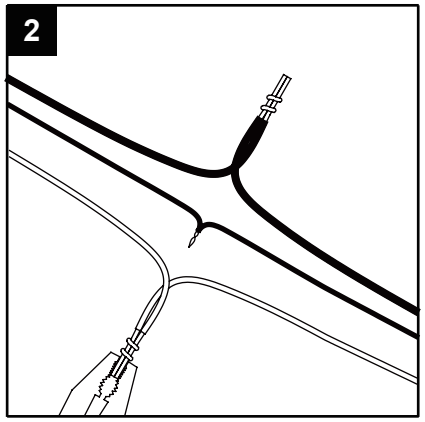

3. Attach wire nuts (BB).Tape wire nuts (BB) and wires together.

Hardware Used

BB Wire nut 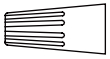 x 3

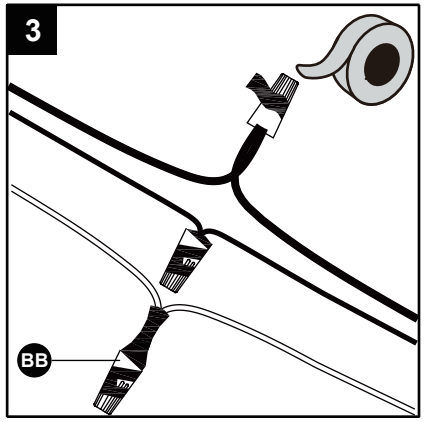

ASSEMBLY INSTRUCTIONS

4. Place fixeture (A) onto the mounting plate (DD). Secure with short mounting screws (AA).

Hardware Used

AA Short mounting screw  x 2

DD Mounting plate  x 1

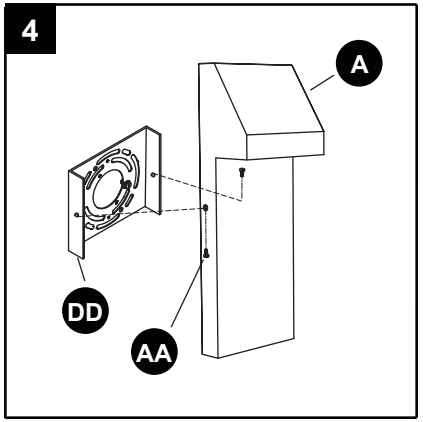

5. This is an integrated LED light fixture, no bulbs needed.

Print in china