Twin Handles Wall Mount Kitchen Faucet

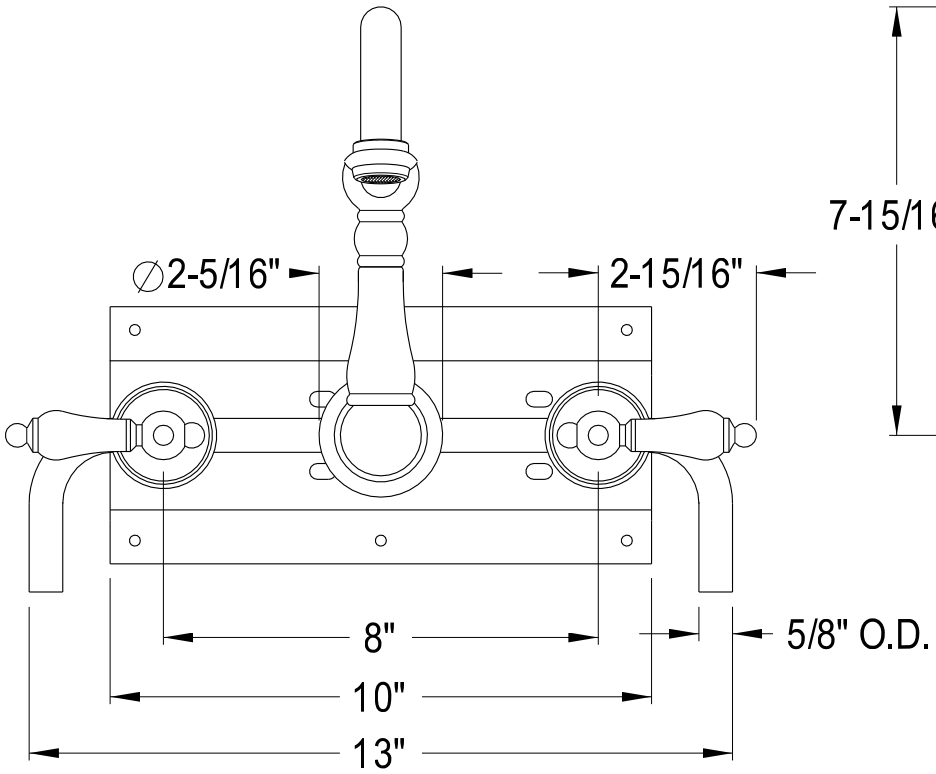

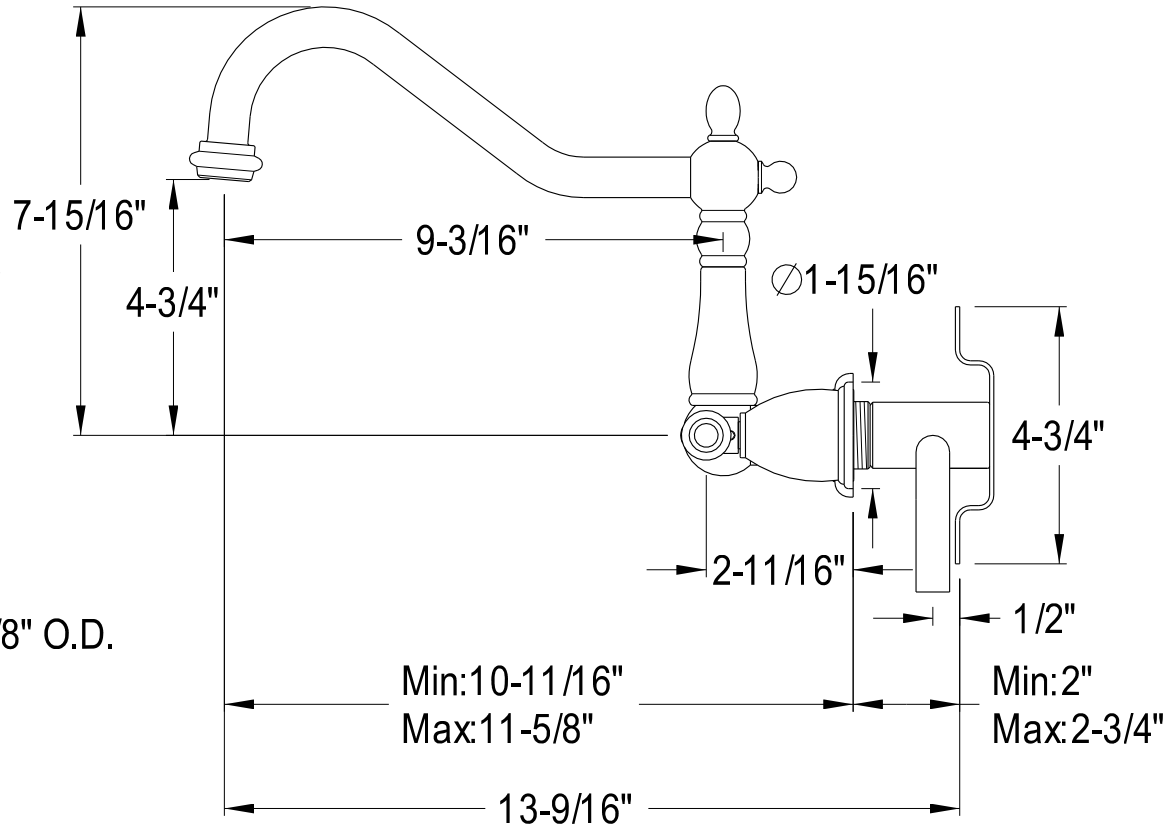

2018-07-B