transolid

top mount

33” x 22” D-Shape Double Radius® Series silQ®granite RTDO3322

FEATURES

- 33” x 22” x 9½” double bowls. D-Shape large bowl.
- Top mount kitchen sink. The rim of the sink sits on the countertop.
- Transolid silQ®granite sinks are by made with the union of natural granite and acrylic resin. The result gives our sinks high resistance to high temperatures, scratches, dents and chips, as well as impacts and violent shocks.
- The non-porous surface is resistant to bacteria growth and reduces the need for cleaning with harsh chemicals and is 100% food safe.
- Lifetime Limited Residential Warranty

COLORS

- 5 Colors

OPTIONS

- TSGRDO Bottom Sink Grid Set, TCBO1518 Bamboo Cutting Board, TGCB2312 Glass Cutting Board, TRM1518 Roller Mat Trivet, TSDIK Universal Sink Drain Installation Kit, 2210 Covered Flip-Top Sink Strainer, 2310 Remote Flip-Top Sink Strainer, 4010 Covered Flip-Top Disposer Strainer, 2012 Standard Sink Strainer, 4000 Soap Dispenser.
  See Accessories specification sheets for details.



Specified Model

Model	RTDO3322
Overall Dimensions	L33” x W22” x D9½”
Left Bowl Dimensions	L14 13/32” x W17 61/64” x D8 31/32”
Right Bowl Dimensions	L12 13/32” x W15 15/32” x D8 31/32”
Faucet Holes	comes with 1 pre-drilled center hole (B) can specify up to 3 additional holes.
Shipping Weight	48 lbs.
Material	silQ®granite
Installation	countertop mounted
Required	2 basket strainers not supplied

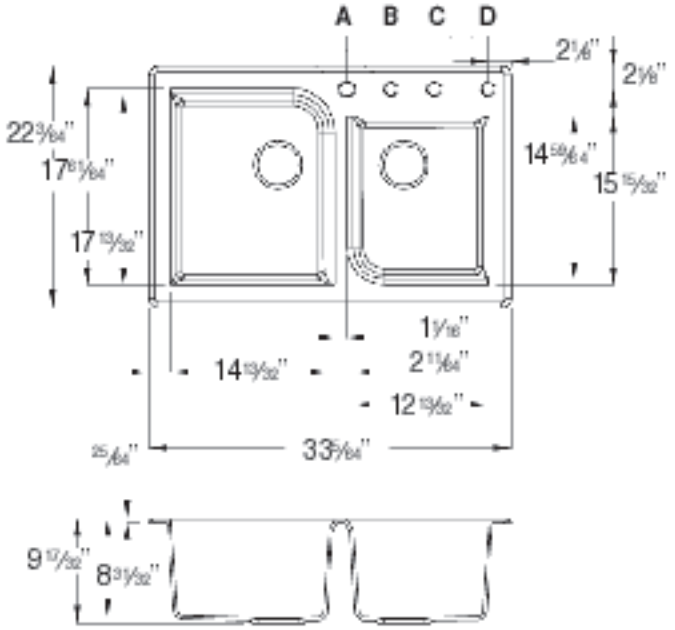

To Be Specified:

	COLOR
❒	01 White
❒	09 Black
❒	12 Espresso
❒	16 Cafe Latte
❒	17 Grey

To Be Specified:

	Faucet Hole Drillings
❒	1 Hole (included)
❒	2 Holes
❒	3 Holes
❒	4 Holes

IMPORTANT: Circle Letter(s) above to indicate location(s) for faucet hole drillings (there is a 4” spread between hole locations A,B,C and 4⅞” between C and D).

silQ®granite SINK COLORS



KITCHEN SINKS