Capoliveri 24 Inch White Microwave Drawer 1.2 cu.ft.

Model: FMWDR3000-24WHT

INCLUDE **STAINLESS STEEL** & **ANTIQUE BRASS** HANDLE

KEY FEATURES

- Angled touch pad controls
- Allows for under counter installation
- 11 Power levels
- 900 Watts
- Choose between stainless-steel antique brass handle
- Defrost rack

APPEARANCE

Appliance Type	Built-In Microwave Drawer
Microwave Size	24"
Microwave Capacity (cu. ft:)	1.2
Door Color	White
Case Material	Steel
Cavity Liner	White Porcelain Coated
Handle Color	Stainless-Steel Or Antique Brass Handles
Control Location	Front Top
Control Type	Touch

FEATURES

Display	LED
Clock	Yes
Kitchen Timer	Yes
Clean Type	Manual Clean
Convection Type	No
Convection Fan	No
Convection Element	No
Preset Menu Setting	-Popcorn -Melt -Soften -Beverage
Power Level	11 Power Levels
Time Defrost	Yes
Weight Defrost	Yes
Defrost Rack	Yes
Turn Table	No
Ceramic Turntable	No
Gliding Rack	No

TECHNICAL SPECIFICATIONS

Watts (W)	900
Circuit Breaker Amperage (A)	20
Volts (V)	120
Frequency (Hz)	60Hz
Plug In	Yes
Power Cord Plug Type	NEMA 5-15P
Power Supply Connection Location	Back

PRODUCT SPECIFICATIONS

Product Dimensions (WxDxH)(In)	23.6” x 25.2” x 15”
Net Weight (Lbs & Kg)	70.5 lbs | 31.9kg
Carton Dimensions (WxDxH)(In)	22.13” x 23.5” x 14.81”
Shipping Weight (Lbs)	80.7 lbs | 36.60g

Customer Support: Call 1-866-231-8893 or email: info@forno.ca
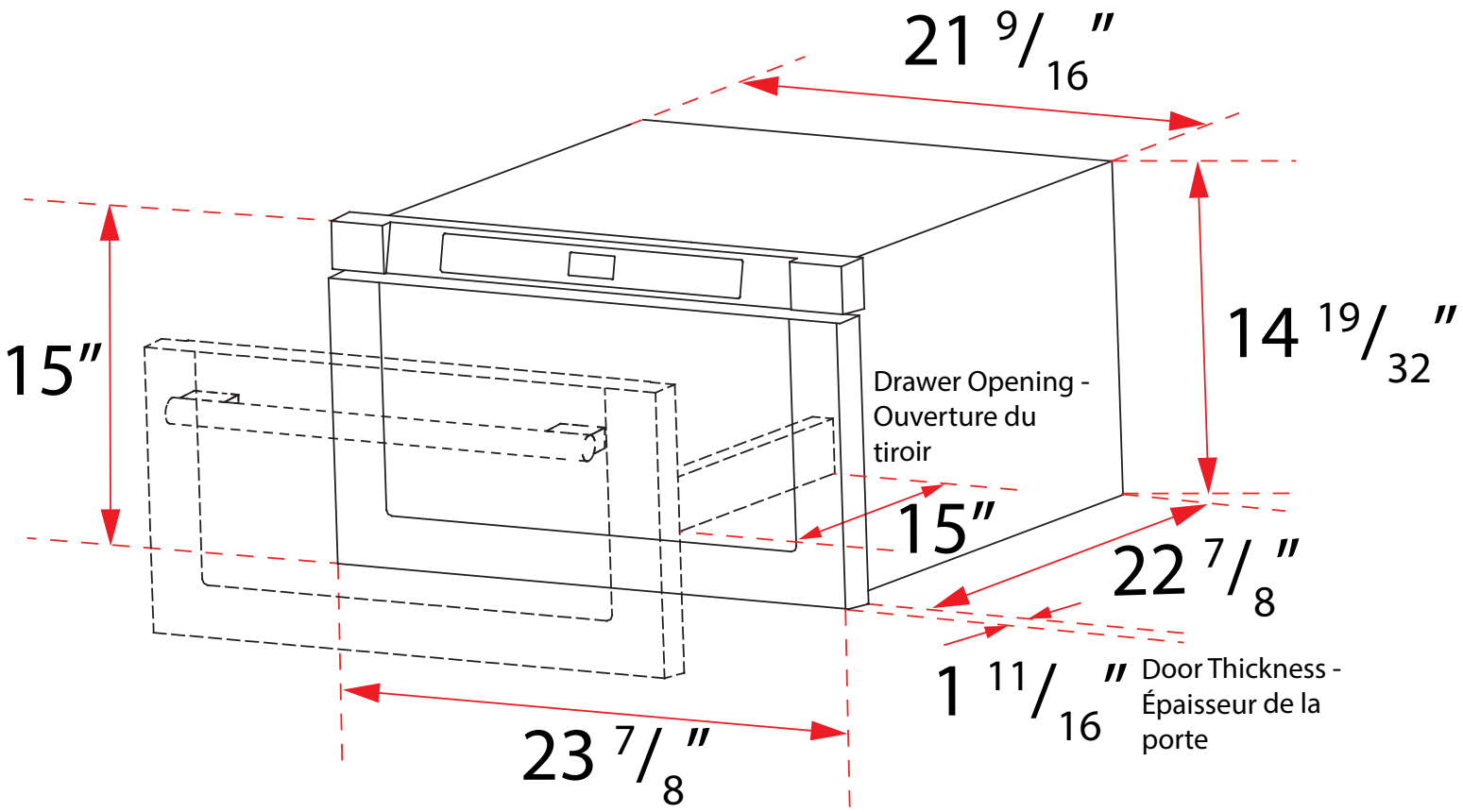
PRODUCT DIMENSION