INSTRUCTION MANUAL

Wire-free Magnetic Strip Wall Lamp

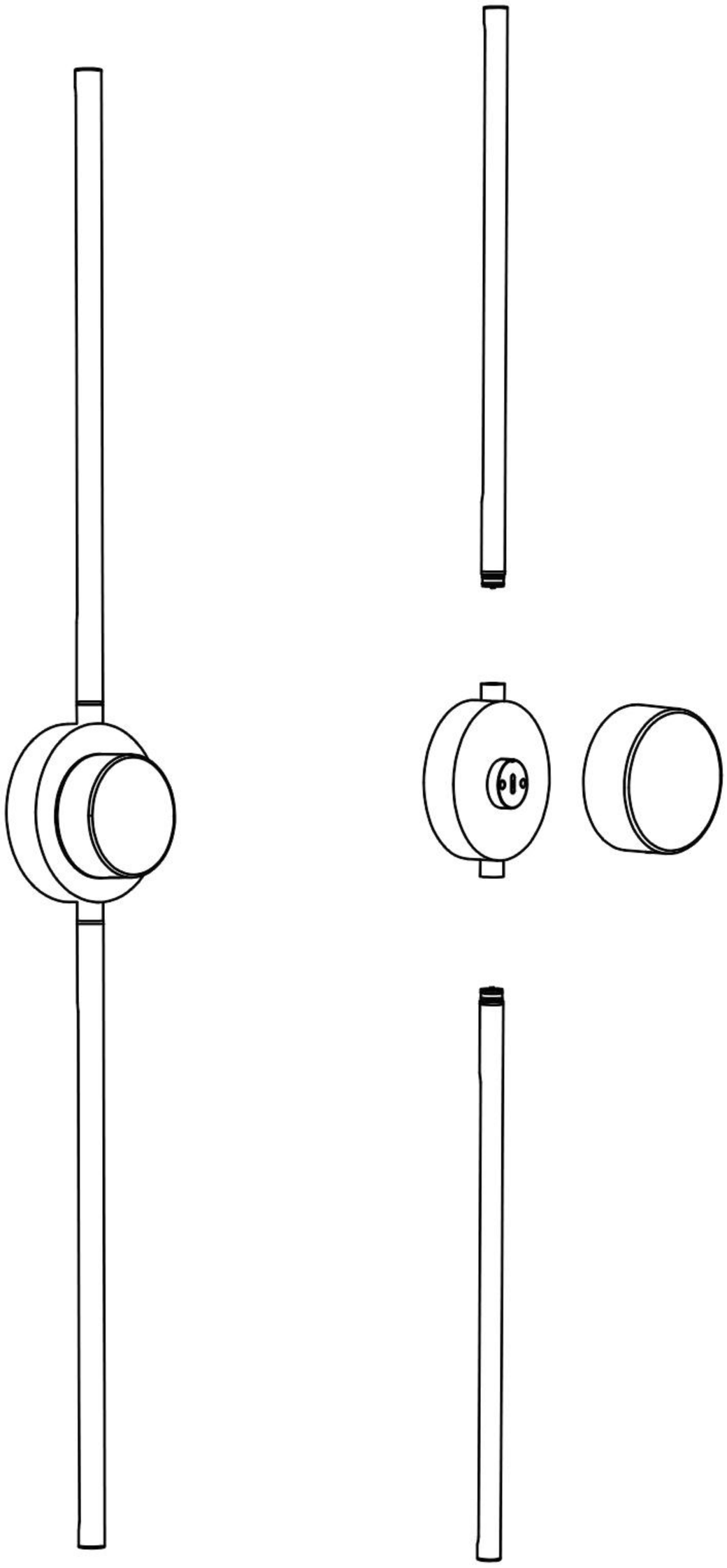

Thank you for choosing our wall lamp !
Please be sure to read the manual carefully in order to ensure full understanding of installation and use of this product.

Product details Every detail is thoughtfully crafted

Light body size	13*100*E7CM
Power	12W
Surface color	Black/Gold
Product material	Wrought iron + Acrylic
Light source	Dual-color changing
Waterproof rating	IP44, suitable for outdoor use
Control method	Wall control / Infrared remote control / Touch control
Charging method	USB charging ; fully charged for continuous lighting for 15-18 hours

Accessories List Carefully count and do not miss anything



Light Pole*4

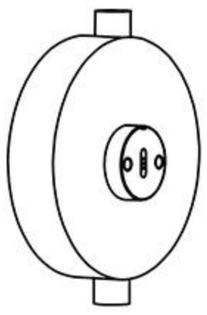

lamp base*2

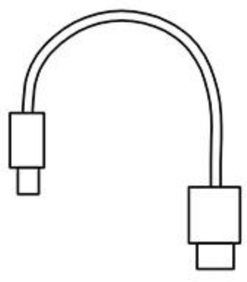

USB Cable*2



Charging Case*2

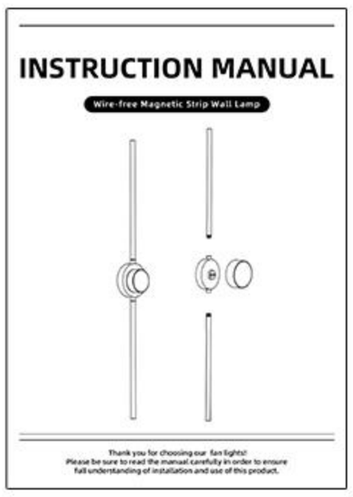

Manual*1

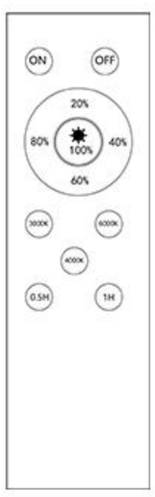

Remote Control*2

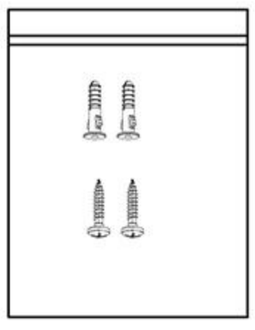

Accessory Pack*2

Tools Needed

Bring your own tools

You may need the tools below:

- 3mm Flat Blade Screwdriver
- Power Drill
- Pencil
- 3mm Flat Blade Screwdriver
- 6mm masonry drill bit (for masonry only)

Before You Start:

1. Check the pack and make sure you have all of the parts listed.
2. Decide on the appropriate location for your product.
If you are in any doubt about installing this product, consult a qualified electrician.

Installation process

Please install according to the operating instructions

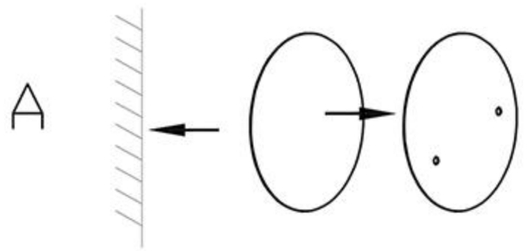

A: Installation method:
Attach the 3M adhesive strip to the metal plate, then stick the metal plate to the wall.

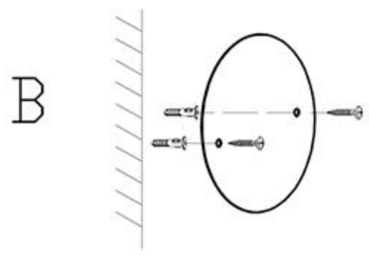

B: Installation method:
Use self-tapping screw inserts and self-tapping screws to secure the metal plate to the wall.

01

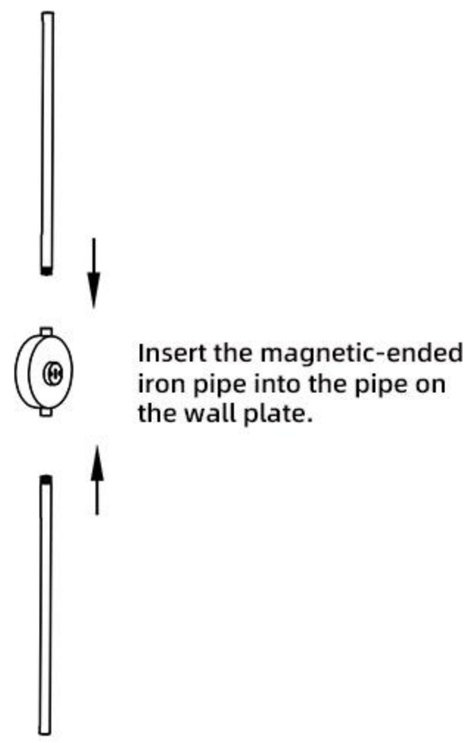

Insert the magnetic-ended iron pipe into the pipe on the wall plate.

02

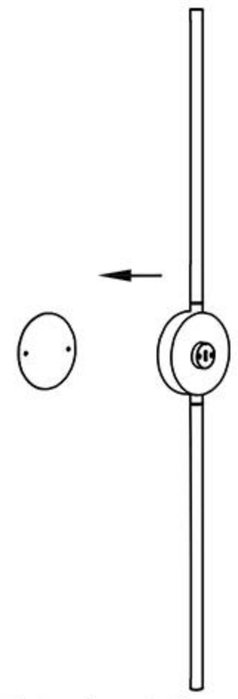

Bring the wall plate close to the metal surface and use the magnetic force to attach the wall plate to the metal sheet.

03

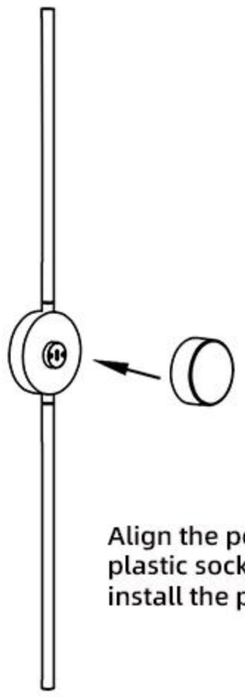

Align the power supply with the plastic socket on the plate and install the power supply.

04



Installation complete

05

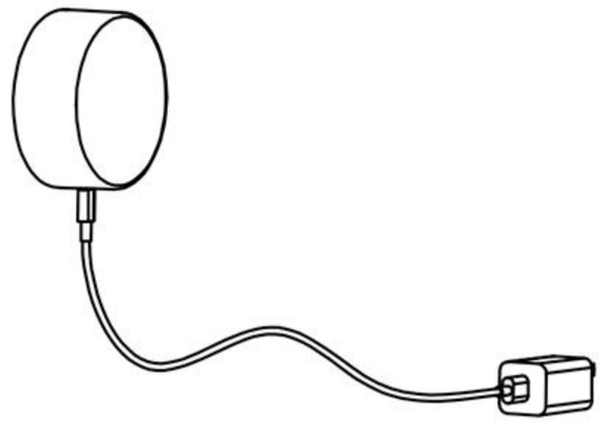

When the battery is low, remove the battery and plug the charging cable into the TP charging port. While charging, the red light next to the TP port will flash to indicate charging, and the green light will turn on when charging is complete.

06

Function introduction

Easily understand this product at a glance.

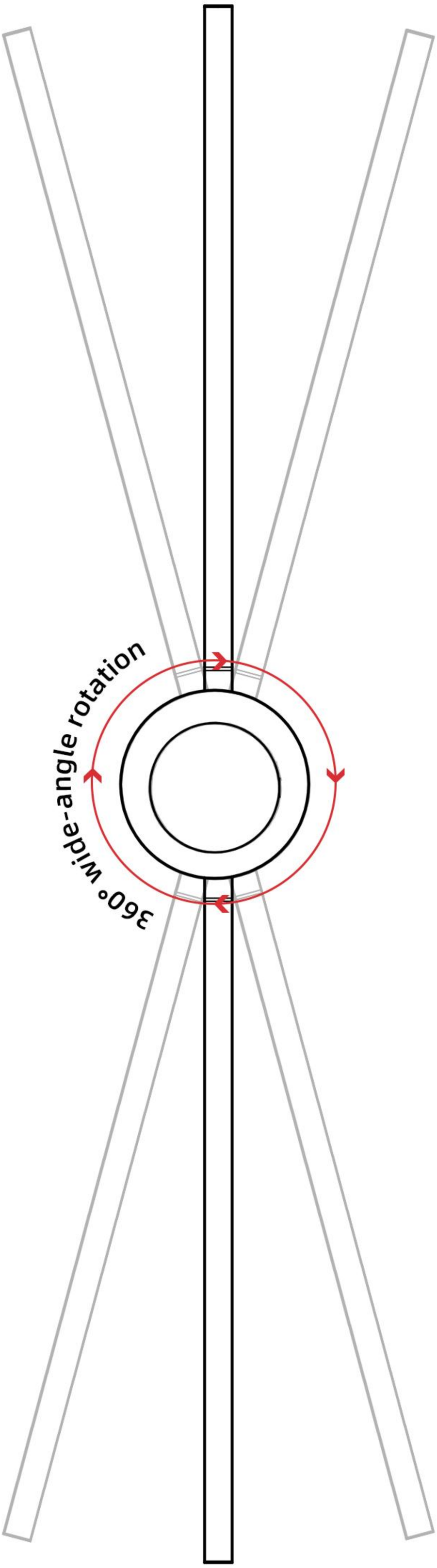



No wiring required

No need for complex wiring and installation.

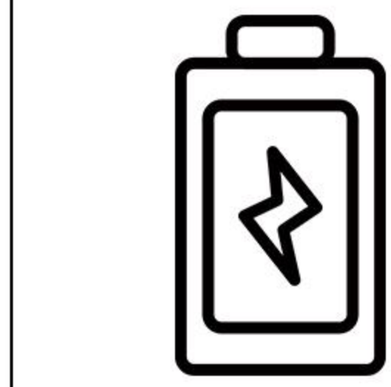

Ultra-long battery life

5000mAh large battery, provides 15-18 hours of continuous use on a full charge.



Dimmable with remote

Brightness and color temperature can be freely adjusted.



Magnetic charging dock

Wide-angle rotating lamp body, allowing for flexible DIY placement of the lamp.



Infrared remote control

Smooth and simple operation with one-touch adjustment for different scene modes.

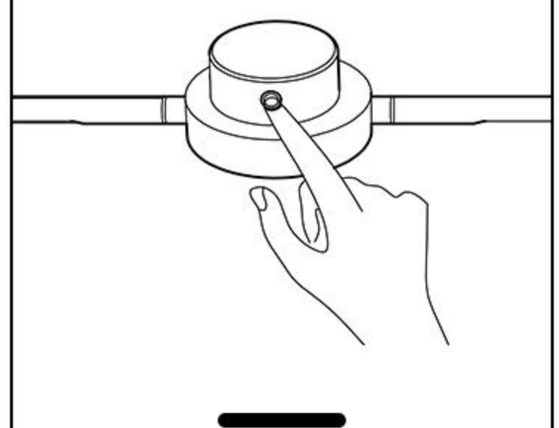

Touch control switch

Short press the power button to adjust the color temperature; long press to adjust the brightness.

Lighting Introduction

Dimmable with remote

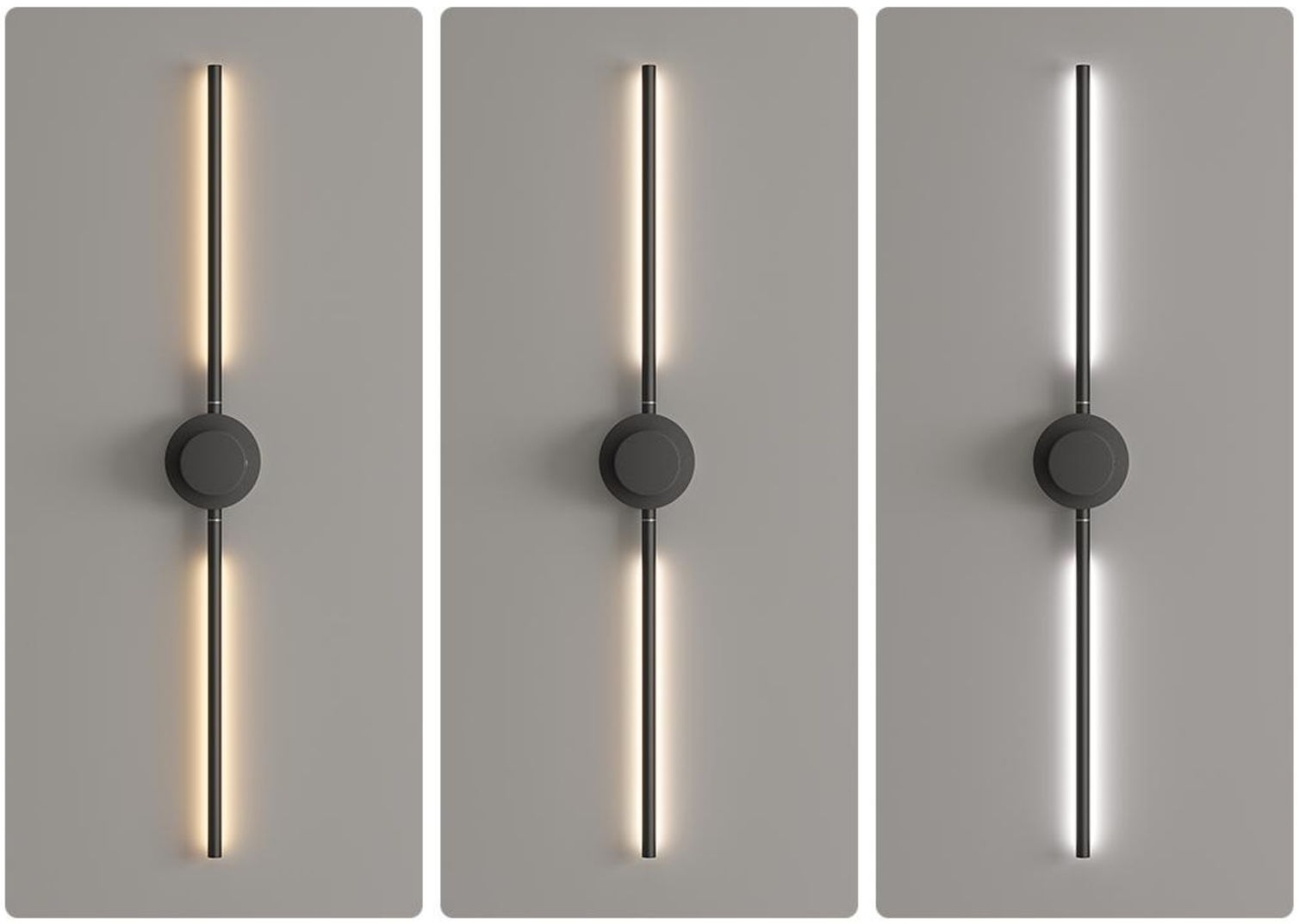

Warm light　　Neutral light　　White light

3000K-6000KColor temperature adjustment

The color temperature can be switched by remote control or short press of touch switch

EASILY SWITCH COLOR TEMPERATURE



10%~100% Brightness adjustment

Brightness can be switched by remote control or long pressing the touch switch

EASILY SWITCH BRIGHTNESS

Scene display

All-match scene, worth choosing









Remote Control

One click experience for remote control

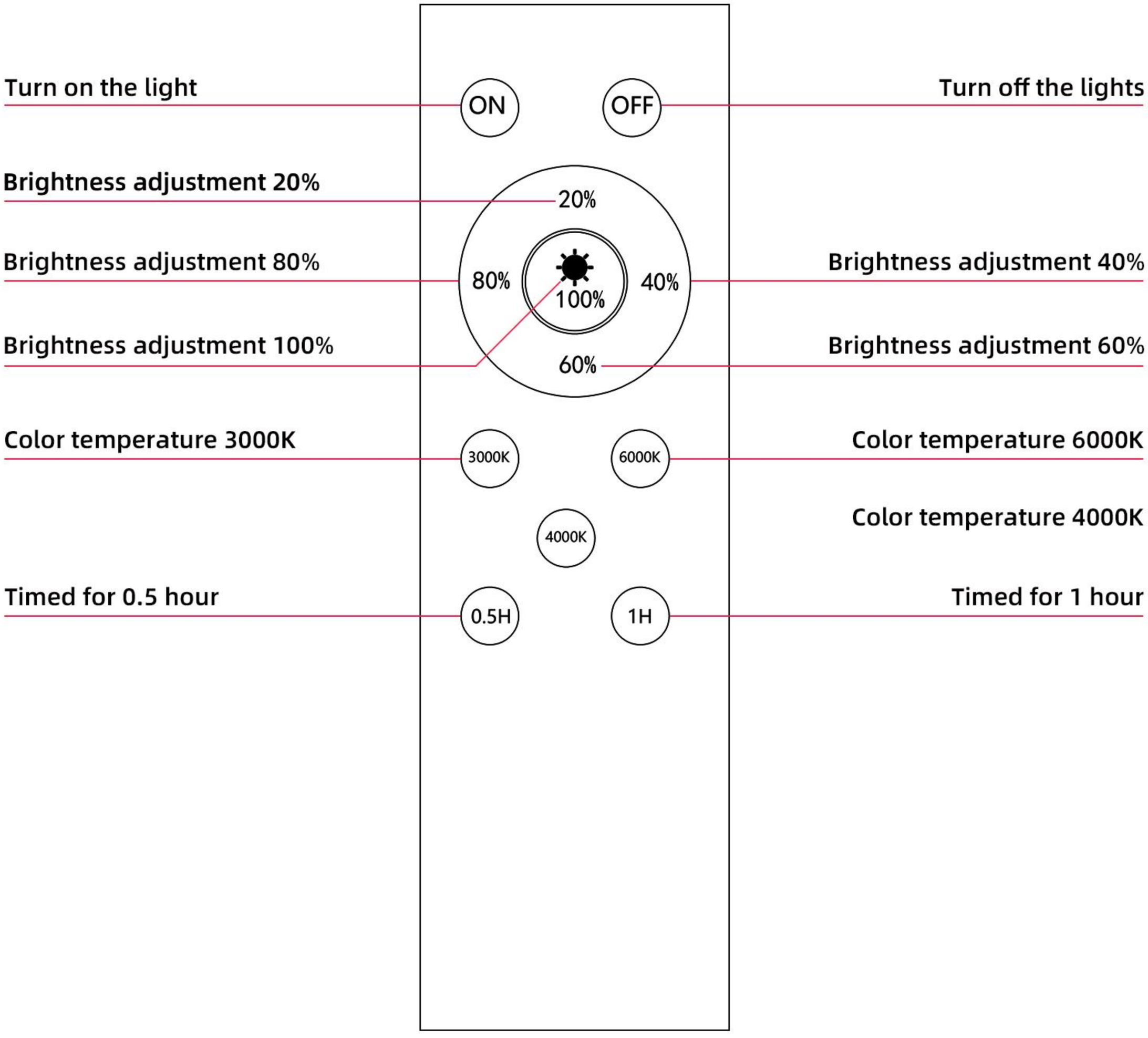

Touch control

Touch to achieve light control

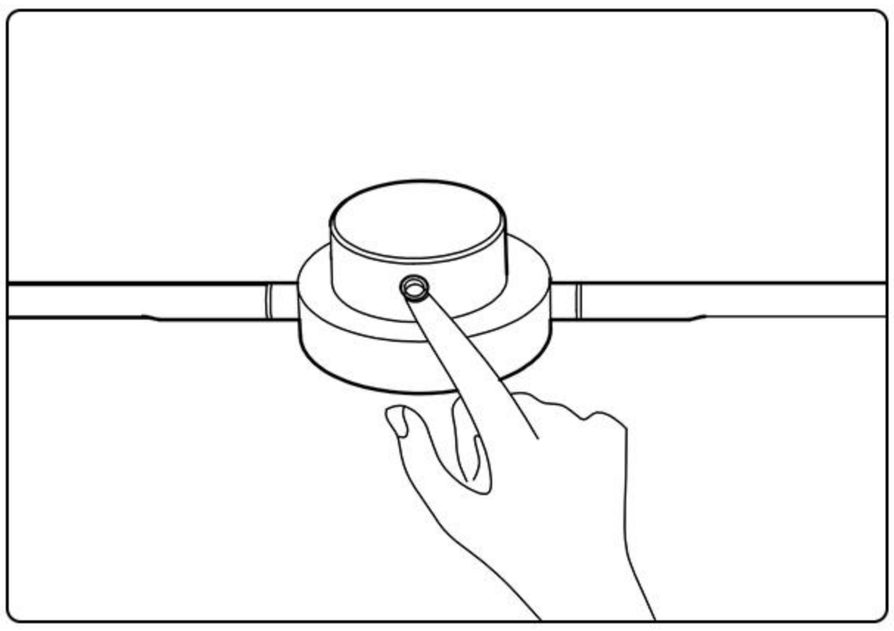

·The color temperature can be switched by remotecontrolor short press of touch switch

·Brightness can be switched by remote control orlong pressing the touch switch

Dear user Thank you very much for purchasing our products!

The wall lamp strictly adheres to national regulations regarding home appliances and the " three guarantees " (quality, repair, and replacement) policy, offering satisfactory after-sales service to our valued customers. The warranty period for the light source and electronic components is one year. If the wall lamp experiences quality issues within the warranty period, the customer must present the three-guarantee certificate, which is stamped by the seller, and bring it to the original sales point of the company's products or specify the free repair service.The three-guarantee service covers only quality issues arising under normal use. It does not apply to damage caused by abnormal usage, such as:

· Unauthorized repairs or modifications

· Use of lamps not approved by the company

· Water ingress or other environmental factors

In such cases, maintenance will incur additional fees. The warranty period begins on the date the three-guarantee certificate is issued. Please keep the certificate safe, as it is required to claim your rights under the warranty.

Important: Ensure that the three-guarantee certificate is completed accurately and not altered. Any alterations will render the certificate invalid.

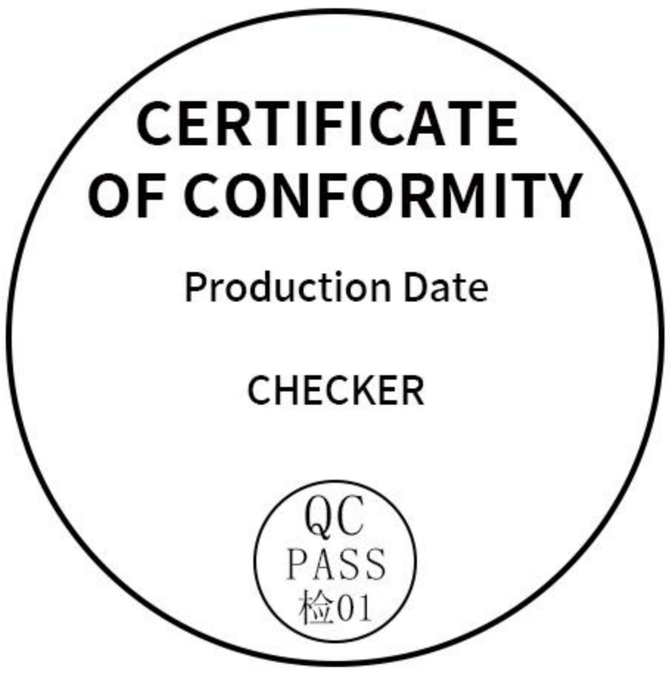

Product after-sales guarantee card

Customer Name	
contact number	
contact address	
Product number	
machine shop	
store contact	
purchase time	

★ The voucher needs to be stamped by the company's authorized dealer to take effect.
If there is no voucher, only a valid online transaction complete record can also be guaranteed.