Specs sheet: **Pull-Out Pant Rack - Premium Series**

## Dimensions:

| SKU | W | W1 | D | Pant Holder Count |
|---|---|---|---|---|
| TRC-A-214-RP-PR9-16 | 16.5”<br>421mm | 12”<br>319mm | 14”<br>355mm | 6 |
| TRC-A-214-RP-PR9-18 | 18”<br>457mm | 14”<br>355mm | 14”<br>355mm | 6 |
| TRC-A-214-RP-PR9-24 | 24”<br>610mm | 20”<br>508mm | 14”<br>355mm | 10 |
| TRC-A-214-RP-PR9-30 | 30”<br>762mm | 26”<br>660mm | 14”<br>355mm | 13 |

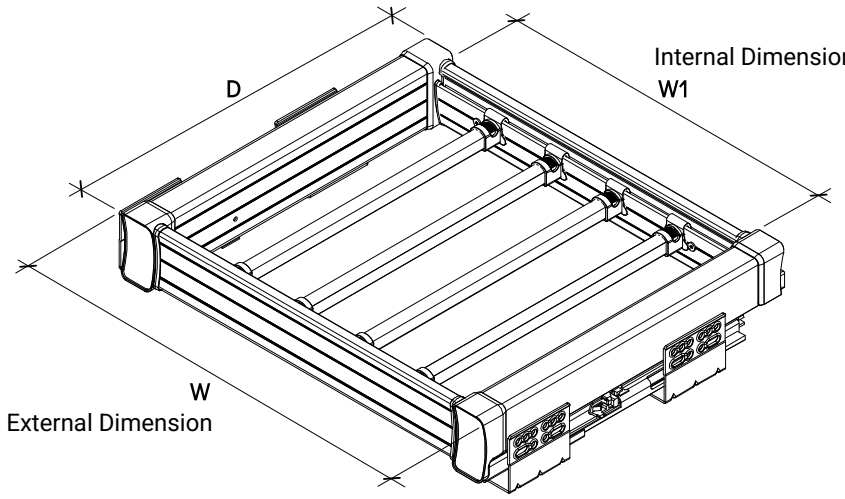


**Key Features:**

- Full-Extension Soft-Close Aluminum Frame: Full-extension soft-close slide system for smooth, quiet operation.
- Reusable Aluminum Frame: Compatible with interchangeable baskets, hampers, pant racks, and accessories without replacing the frame assembly.
- Adjustable Pant Holder Inserts: Adjustable configuration accommodates varying fabric types and thicknesses, while ribbed aluminum rails help minimize garment movement.

**Materials & Finishes:**

Satin aluminum frame and pant holder inserts.



**© Via Closets LLC. All rights reserved.** Unauthorized reproduction, distribution, or use of this document is strictly prohibited. Disclosure to third parties or use for unauthorized purposes is forbidden. Violators will be prosecuted.

This document and product are protected by copyright and pending design and utility patent applications.