Specifications

R-RHUCC30SWH

Under Cabinet Range Hood



Size	30 Inch
Mounting Type	Under Cabinet
Controls	Rocker Switch Controls
Filter	Aluminum Mesh Filter
Finish	White
Air Flow	Efficient
Noise Level	45 dB*
Vent Style	Ductless / Convertible
Lighting	1 x Front Light
Voltage	120V / 60Hz
Wattage	120W
Included Components	Bulb, Damper, Exhaust Vent, Fan Hardware, Installation Kit

2 Fan Speeds

Rocker Switch Controls

Front Light

Overview

The R-RHUCC30SWH makes a great addition to any modern or contemporary kitchen. The range hood features two fan speeds, built-in lighting and an aluminum mesh filter. Built with a white finish.

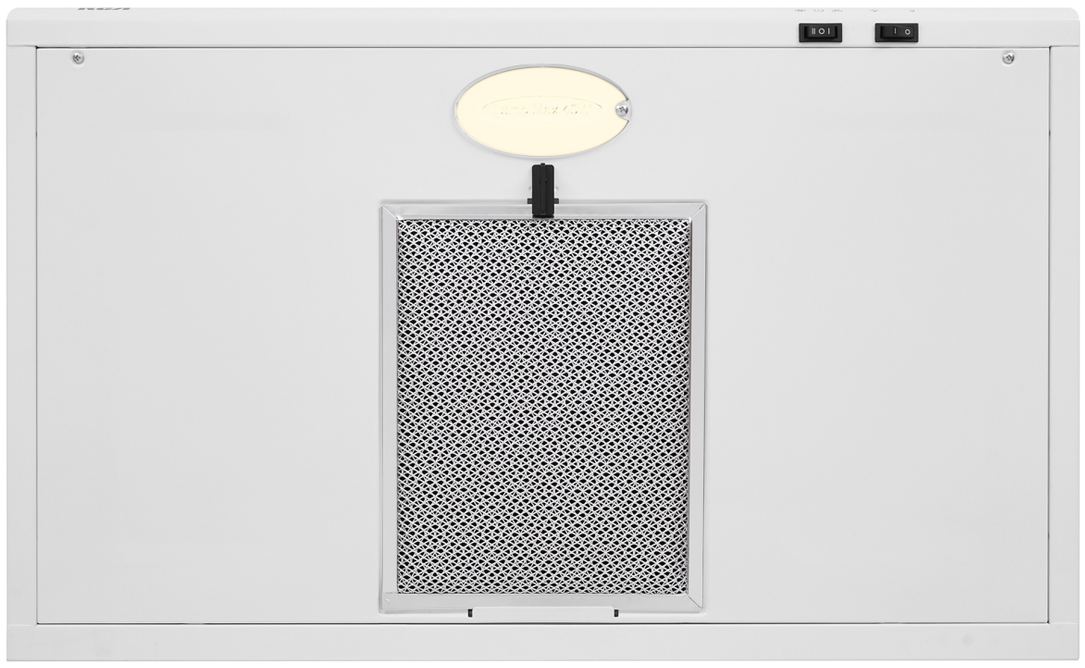

Features

- Designed for under cabinet installation
- 2 fan speeds
- Efficient airflow capacity
- Rocker switch controls
- Aluminum mesh filter
- Front light
- Noise level as low as 45 dB*
- White finish

See Page 2 for dimensions

For more information, please visit: www.fgsbrands.com

*Noise level at lowest fan speed with rigid ducting (sold separately) under optimal conditions

Dimensions

R-RHUCC30SWH

Under Cabinet Range Hood

Top Exterior Panel

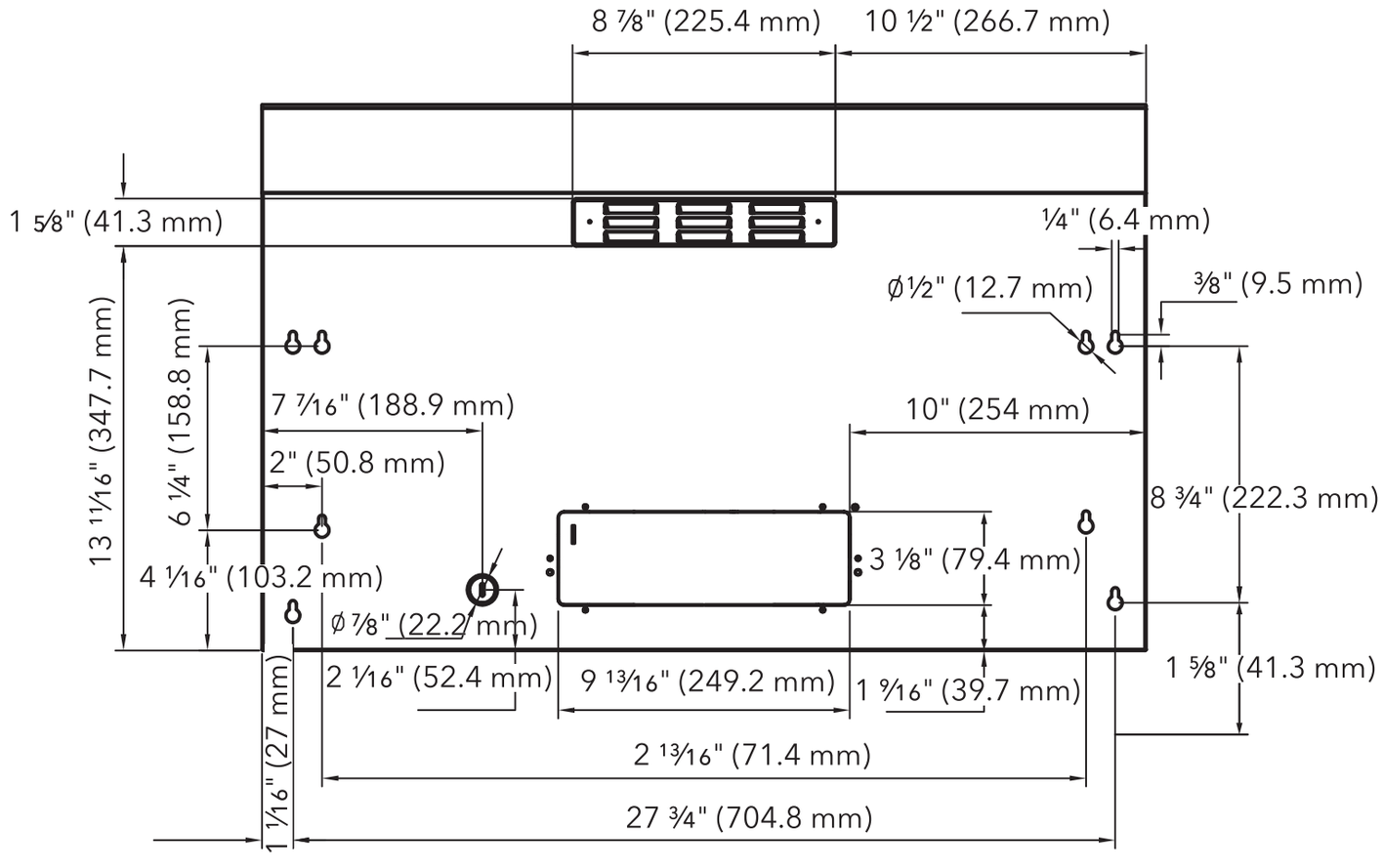

Button Panel

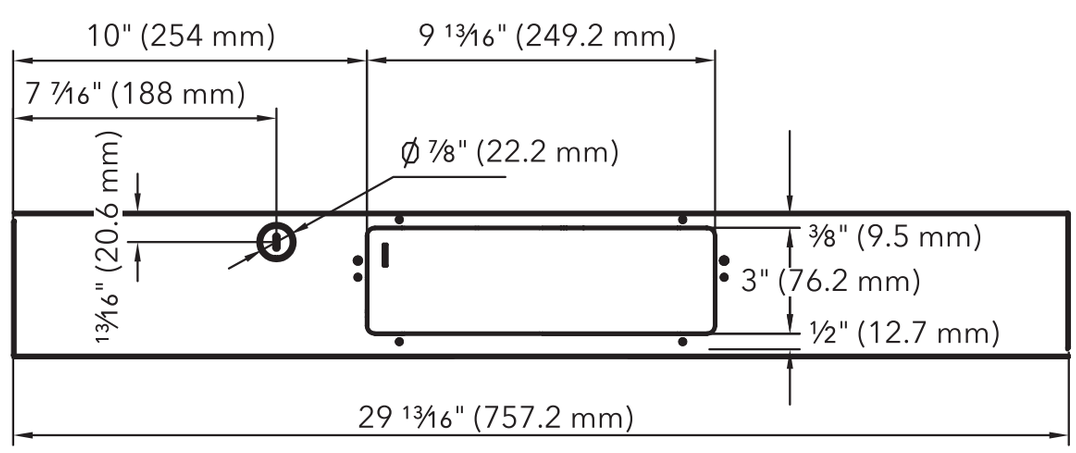

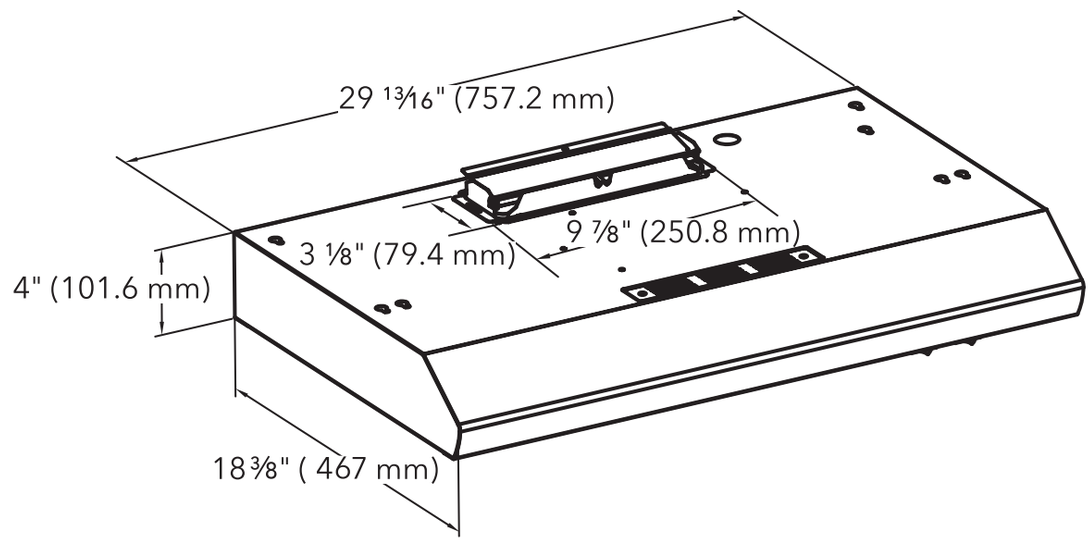

Dimensions (WxDxH): 29.8″ x 18.4″ x 4″

For more information, please visit: www.fgsbrands.com