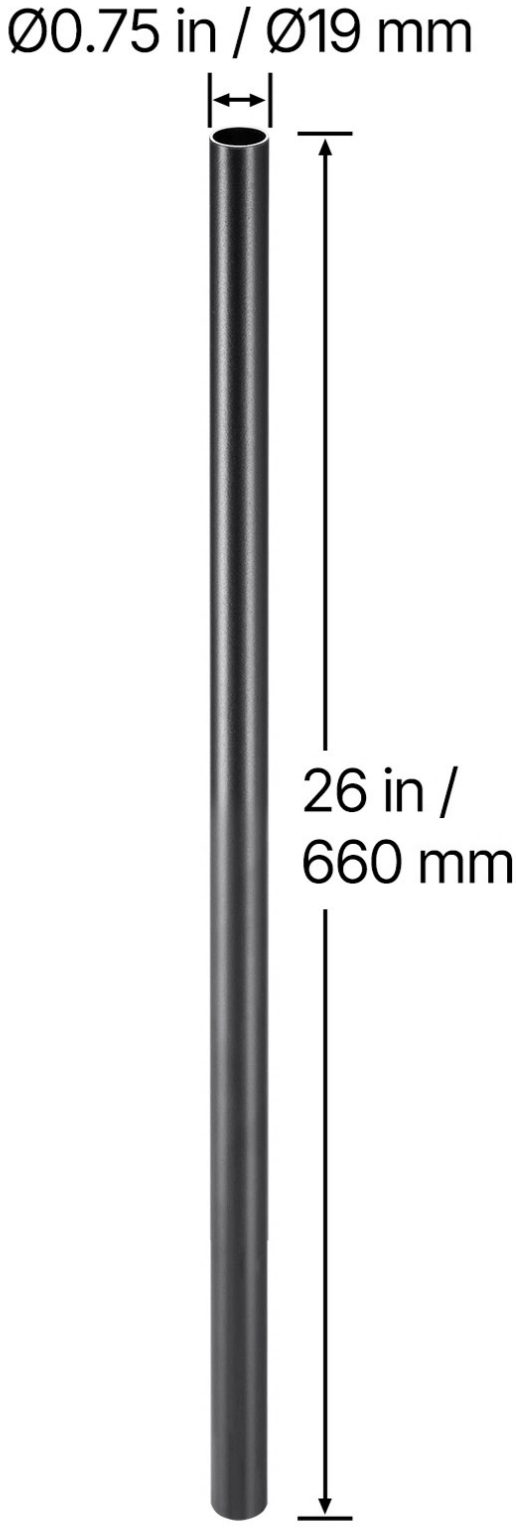
Ø0.75 in / Ø19 mm
26 in /
660 mm