SPEC SHEET

30 In. 5.5 Cu. Ft. Residential Auto Defrost Chest Freezer

Model: KM-CF-48AD

FEATURES

- **Compact 5.5 Cu. Ft. Chest Freezer for Flexible Storage:** Space-efficient design provides ample frozen storage while fitting easily in kitchens, garages, or utility areas.
- **Garage-Ready Performance for Flexible Placement:** Operates reliably in ambient temperatures from 32°F to 100°F while maintaining internal temperatures from -11°F to 10°F, making it ideal for garages, basements, and utility spaces.
- **Frost-Free Cooling System for Convenience:** Automatic defrost system reduces ice buildup and minimizes maintenance.
- **Digital Temperature Control with External Display:** Easy-to-use digital controls located on the exterior allow precise temperature adjustments without opening the lid.
- **Durable Steel Construction Inside and Out:** Built with steel interior and exterior for long-lasting durability and reliable performance.
- **Interior LED Lighting for Clear Visibility:** Integrated LED light on the lid illuminates contents for easy access, even in low-light conditions.
- **Removable Storage Basket for Organization:** Includes a basket for frequently used items, helping keep contents organized and accessible.
- **Quiet Operation for Residential Use:** Operates at approximately 42 dB, making it suitable for home environments.







CLOSE UP IMAGES









Technical Specs

Dimensions & Weight

Length	30.25 in.
Width	22 in.
Height	33.75 in.
Weight	73 lbs.
Interior Depth	15.83 in.
Interior Width	25.08 in.
Interior Height	27.4 in.
Height with Lid Open	53 in.
Minimum Back Air Clearance	2 in.
Minimum Side Air Clearance	Not Required

Electric & Certifications

Voltage	115
Wattage	80
Hertz	60
Amps	0.7
Phase	1
Plug Type	NEMA-5-15P
Power Cord Included	Yes
Power Cord Length	63 in.
Energy Consumption	230 kWh/Year
Certifications	UL Listed for Safety

Capacity

Gross Cubic Feet	5.5
Net Cubic Feet	4.9
Number of Freezer Baskets Bins	1
Individual Bin Capacity	20 lbs.

Features & Materials

Temperature Range	-11°F to 10°F
Ambient Temperature Range	32-100 F
Temperature Control	Digital
Control Location	Exterior
Defrost Type	Automatic
Cooling Unit Type	Automatic
Refrigerant Type	R600a
Horsepower	0.13
Interior Lights	LED
Interior Lights Location	On the Door
Interior Lights Brighthess	40 lm
Door Style	Vertical Swing
Door Material	Steel
Number of Doors	1
Exterior Material	Steel
Interior Material	Steel
Color Finish	Gray
Interior Color	White
Hinge Location	Rear
Safety Lock	No
Temp Control Lock	Yes
Noise	42 dB
Handle Type	Recessed
Installation Type	Freestanding
Commercial/Residential	Residential
Casters	4
Compressor Location	Bottom

Plan View

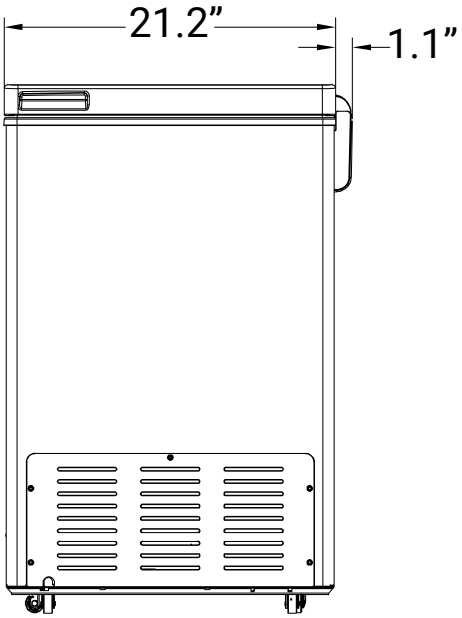

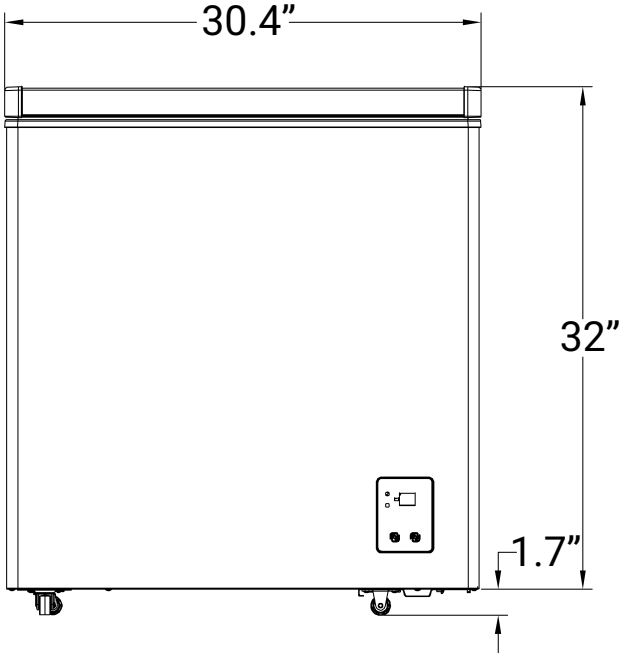

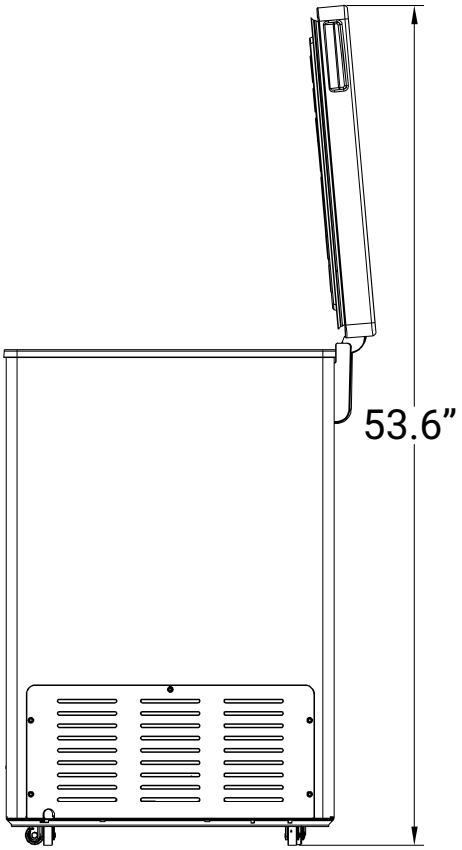

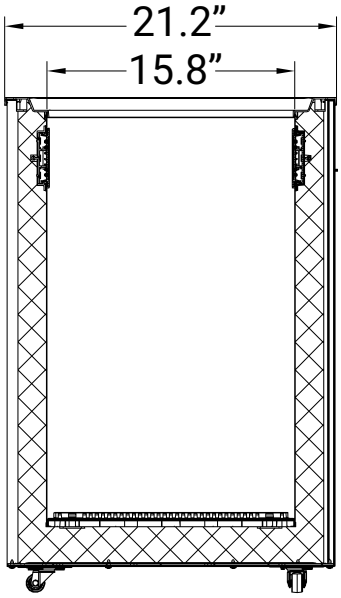

718-576-6342
info@koolmore.com

CERTIFICATIONS

UL LISTED