HDPE Chaise Lounge

Assembly Instructions 041-086-001

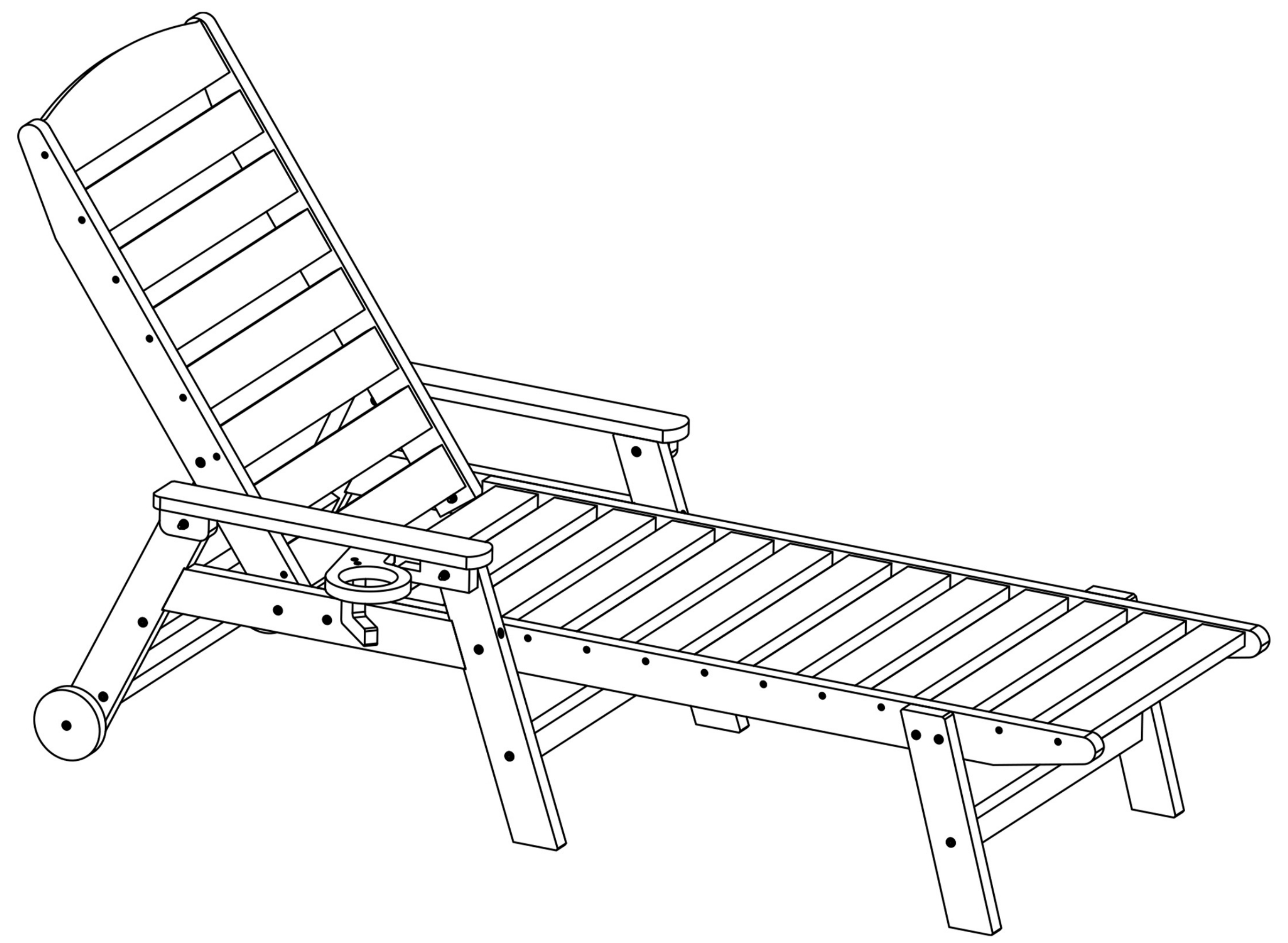

Important - Please read these instructions fully before starting assembly

HASSLE-FREE WARRANTY

We stand behind the quality of our products.

For full warranty policy, email: **poly@homeselecting.com**

360 LBS CAPACITY

1 PERSON ASSEMBLY

AROUND 15 MIN. ASSEMBLY

Components

Please check you have all the components listed below.

Note:The illustration of the product shows the exact position of each part. Check when assembing.

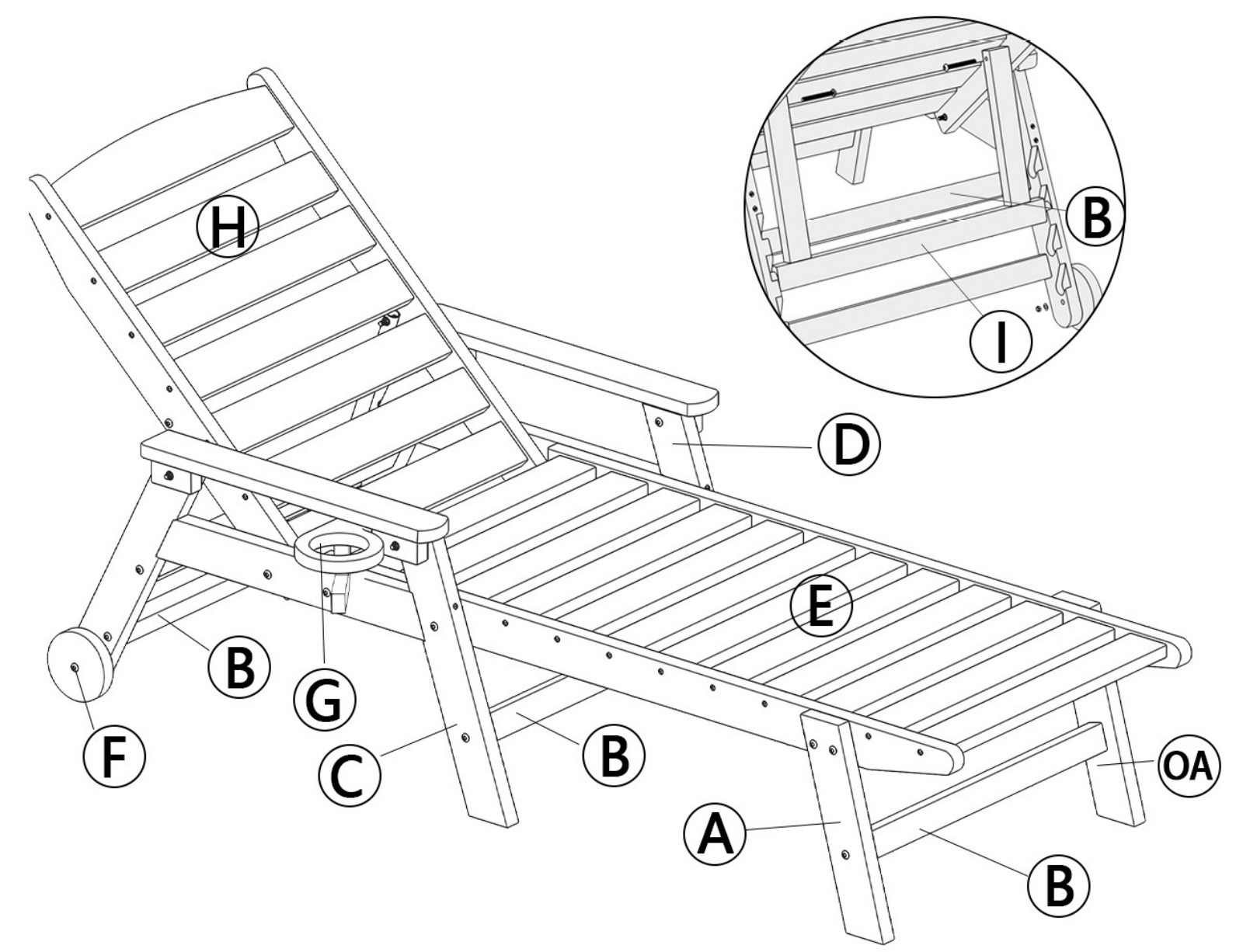

#		Description	Qty.
A	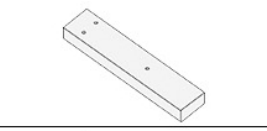	Right Front Leg	1
0A	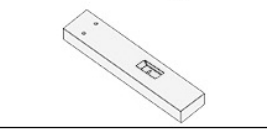	Left Front Leg	1
B		Stretchers	4
C		Right Armrest Frame	1
D	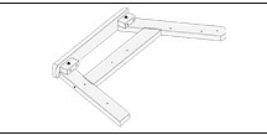	Left Armrest Frame	1
E		Seat	1
F		Wheels	2
G		Cup Holder	1
H	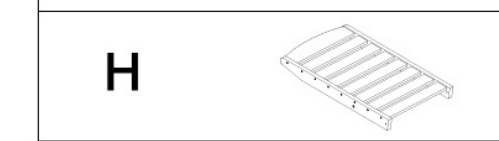	Backrest	1
I	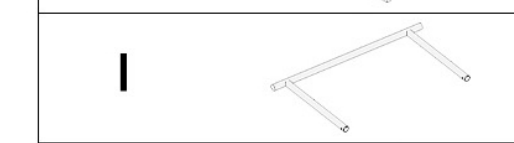	Reclining Adjuster	1

Hardware & Tools

Note: The quantities below are the correct amount to complete the assembly. In some cases more fittings may be supplied than required.

① x 8

M6 x 60MM Screws

② x 14

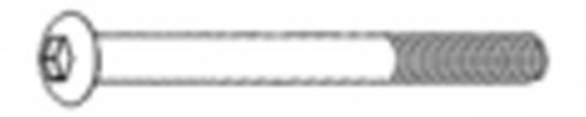

M6 x 60MM Bolts

③ x 1

M6 x 30MM Screws

④ x 15

Washer

⑤ x 14

Nut

⑥

Wrench (Included)

⑦

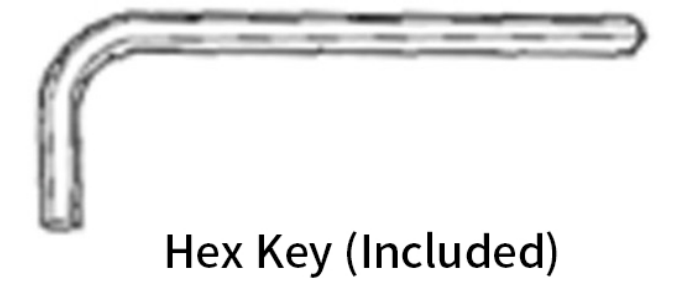

Hex Key (Included)

Assembly Instructions

⚠ Caution: Please do not over-tighten bolts and screws during assembly.

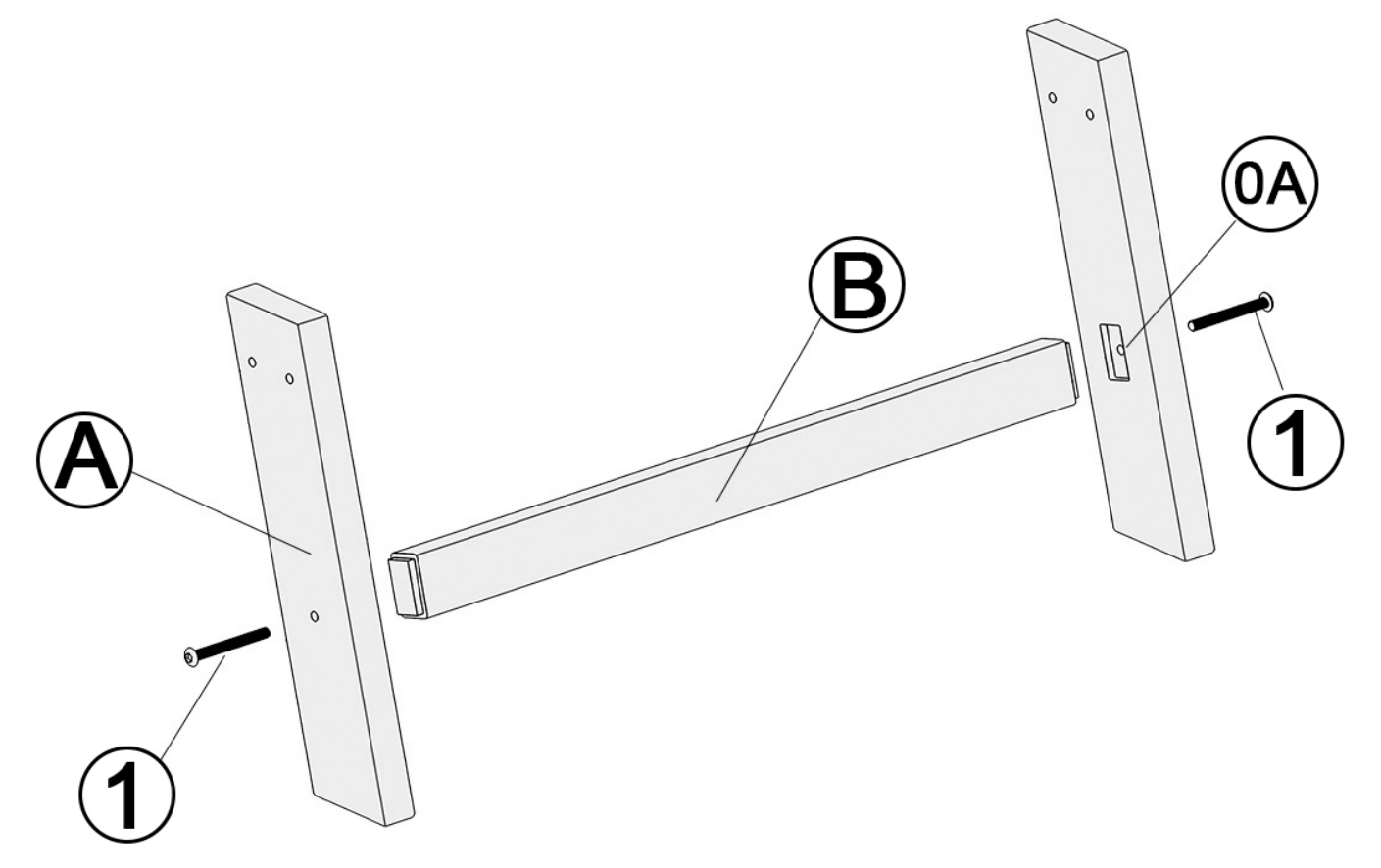

①×2

STEP 1

Attach "Front Legs (A)" with 1 "Stretcher (B)"- Using "①M6 x 50MM Screws", tighten with hex key.

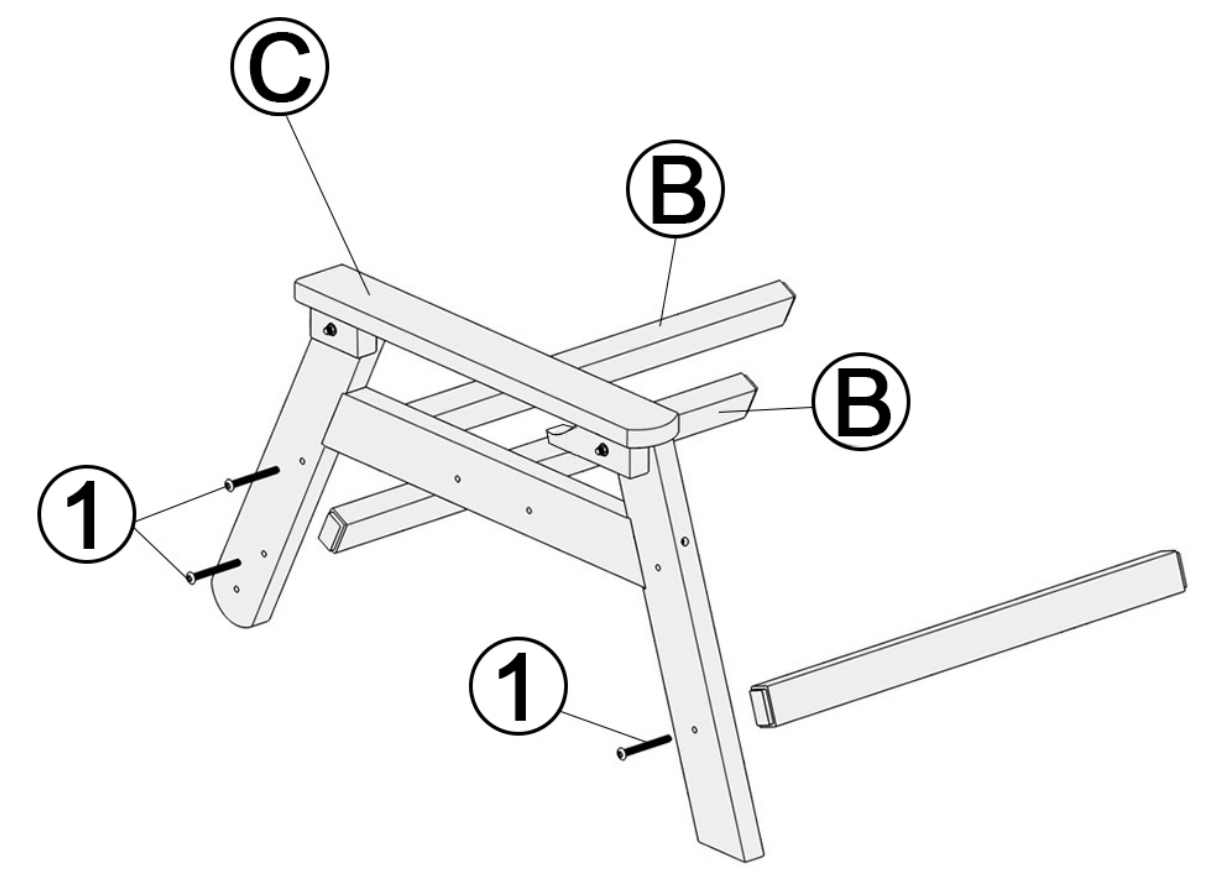

①×3

STEP 2

Assemble "Armrest Frame (C)" with 3 "Stretchers (B)" - Using "①M6 x 50MM Screws", tighten with hex key.

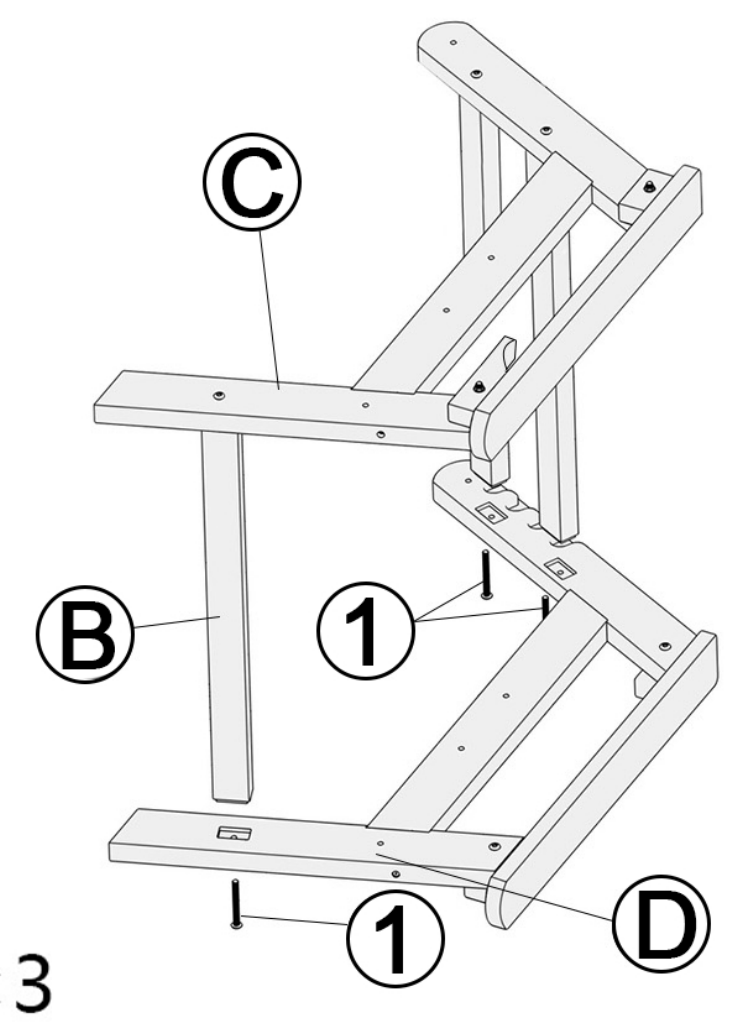

①×3

STEP 3

Assemble "Armrest Frame (D)" with 3 "Stretchers (B)" - Using "①M6 x 50MM Screws", tighten with hex key.

For easy assembly, please place the "Armrest Frame (D)" flat on the ground, insert the stretchers' tenons into the mortises from top to bottom, and then tighten them with screws.

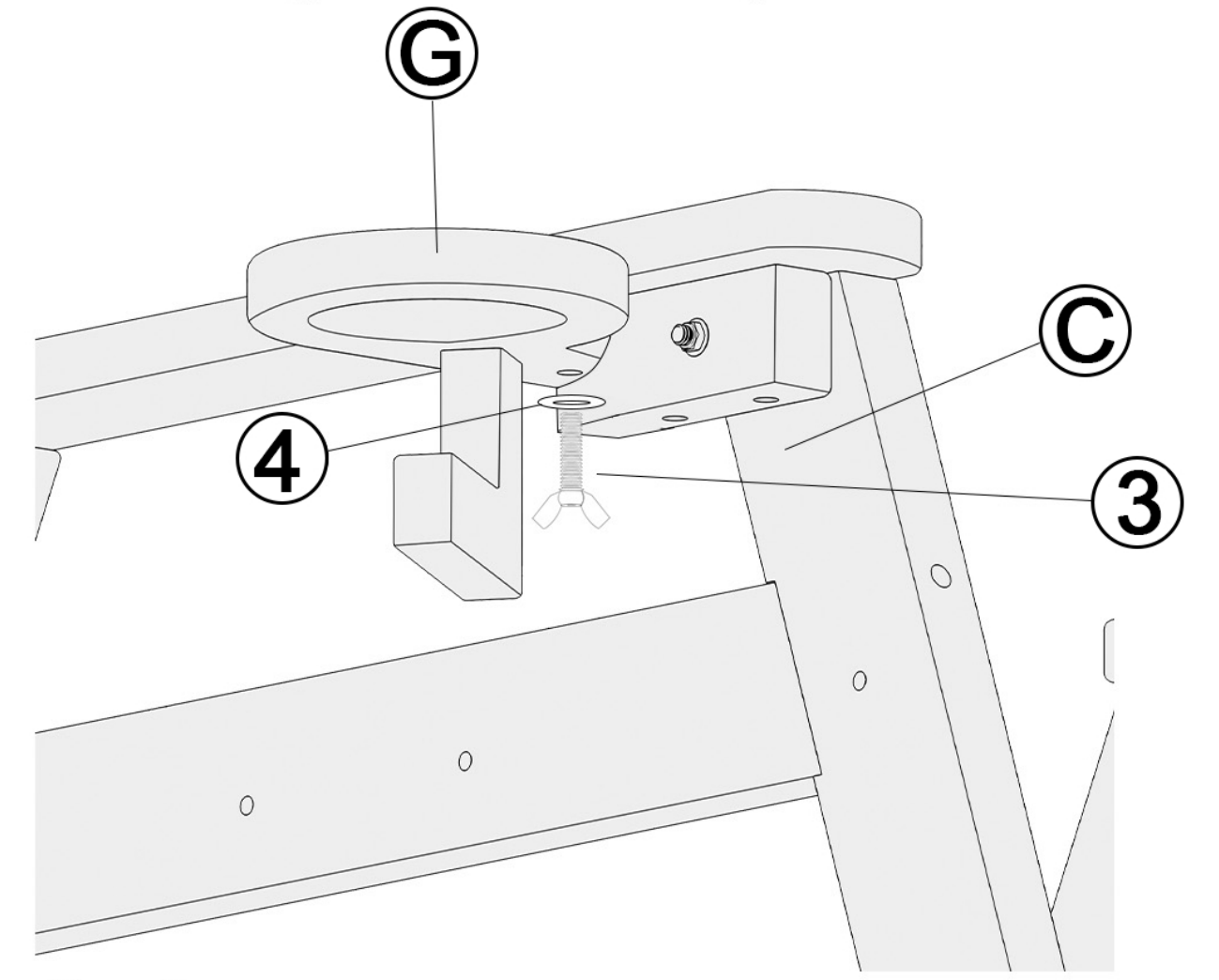

③×1

④×1

STEP 4

Attach “Cup Holder (G)" to “Right Armrest Frame (C)" - Using "③M6 x 30MM Screws" and "④Washers" ,tighten with hand.

Assembly Instructions

⚠ Caution: Please do not over-tighten bolts and screws during assembly.

②×4

④×4

⑤×4

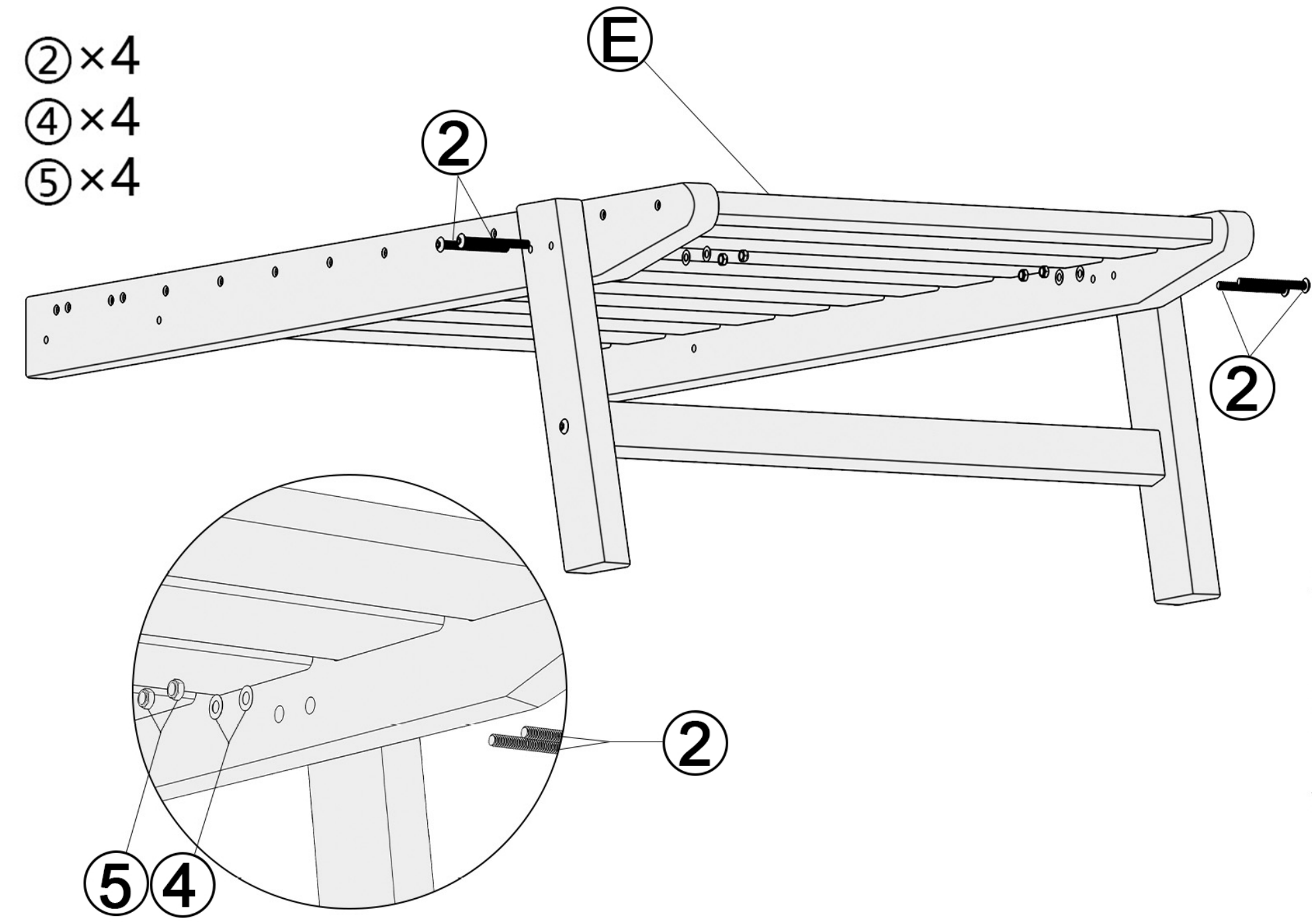

STEP 5

- Attach Front Legs (A) to "Seat (E)"- Using “②M6 x 60MM Bolts", "④Washers" and "⑤Nuts", tighten with hex key.

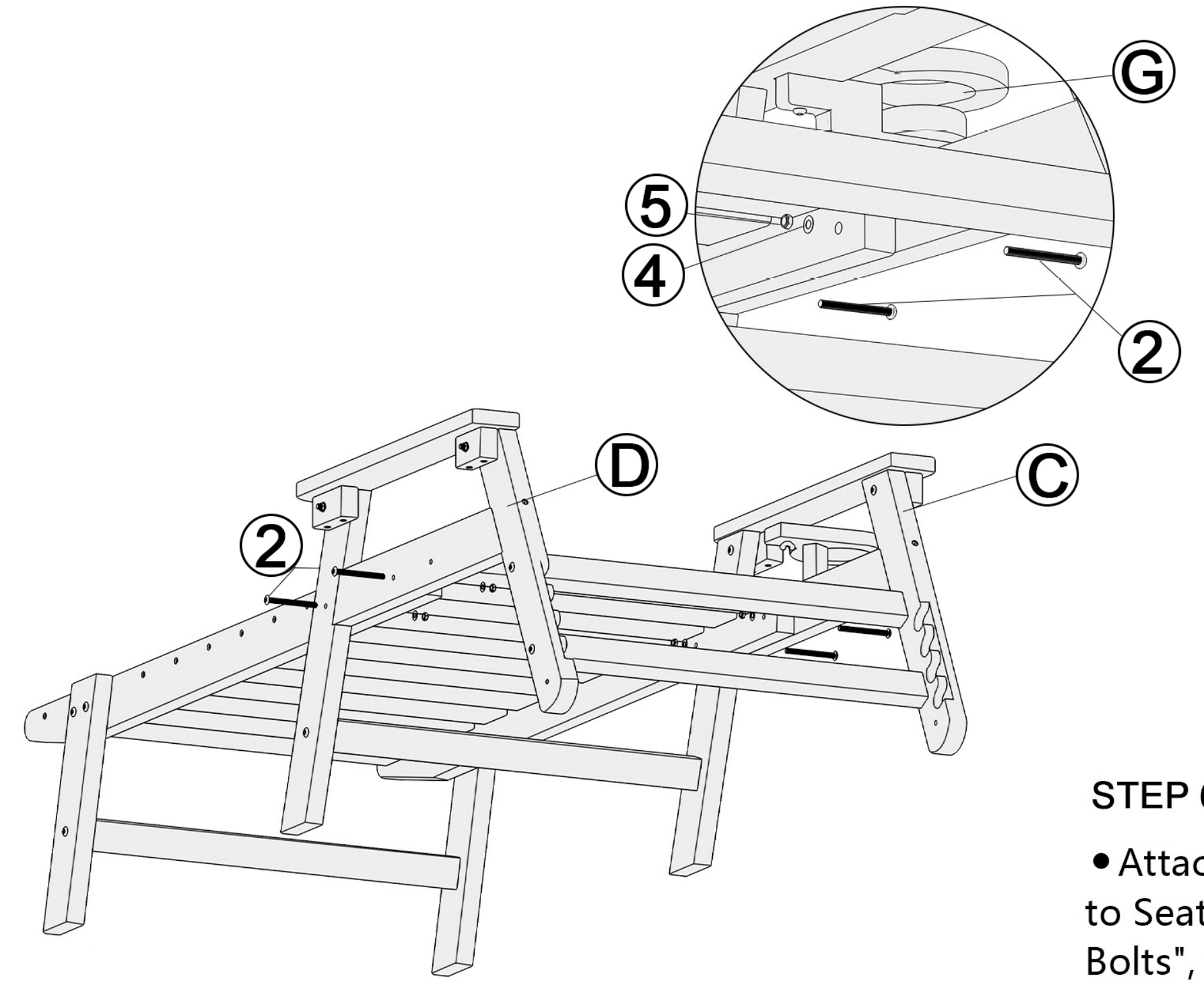

②×4

④×4

⑤×4

STEP 6

- Attach "Armrest Frame (C&D)" to Seat(E)-Using "②M6x6OMM Bolts", "④Washers" and "⑤Nuts", tighten with hex key.

Assembly Instructions

⚠ Caution: Please do not over-tighten bolts and screws during assembly.

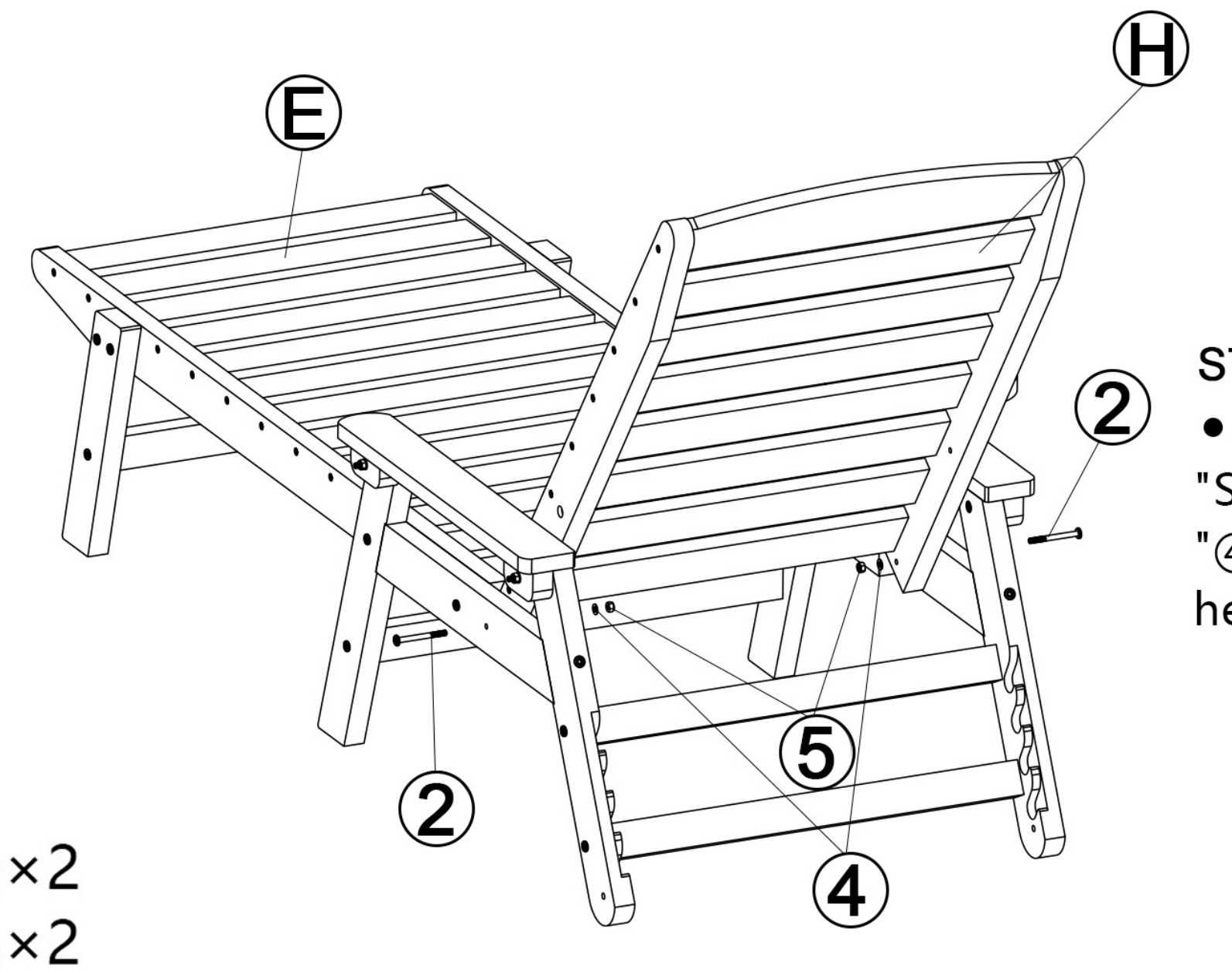

②×2

④×2

⑤×2

STEP 7

- Attach "Backrest (H)" to completed "Seat (E)"- Using "②M6 x 60MM Bolts", "④Washers" and "⑤Nuts", tighten with hex key.

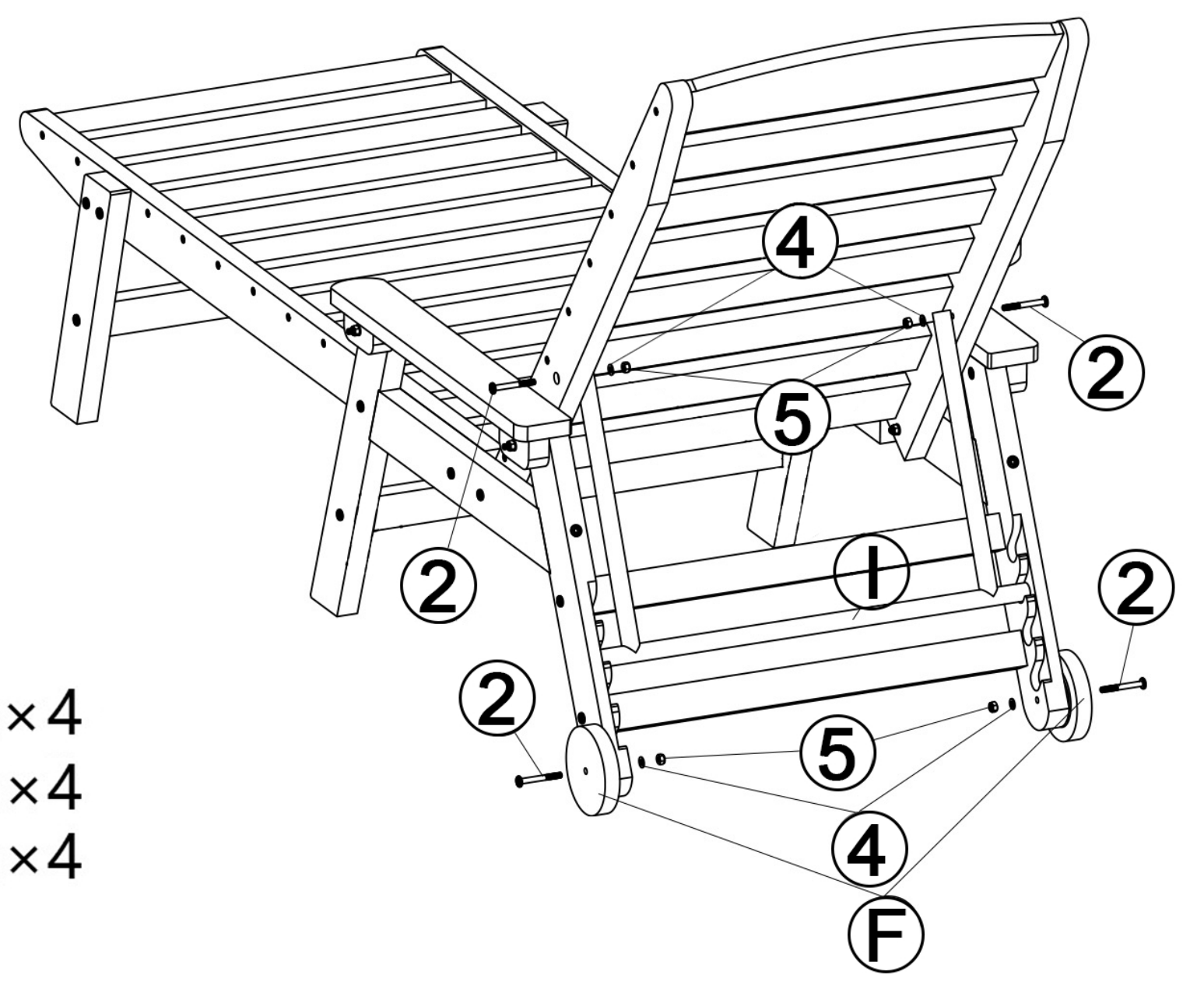

②×4

④×4

⑤×4

STEP 8

- Attach "Reclining Adjuster(I)" to Backrest-Using "②M6 x 60MM Bolts","④Washers" and "⑤Nuts",tighten with hex key.
- Attach "Wheels(F)" to the Armrest Frames - Using "②M6 x 60MM Bolts", "④Washers" and "⑤Nuts", tighten with hex key.

To ensure the wheels function properly,please do not over tighten the nuts.

Warnings

Important - Please read these instructions fully before starting assembly

Check you have all the components and tools listed on the page 2.

Remove all fittings from the plastic bags and separate them into their groups.

Keep children and animals away from the work area, small parts may cause choking if swallowed.

Make sure you have enough space to layout the parts before starting.

Assemble on a soft level surface to avoid damaging the unit or your floor.

Do not stand or put weight on the product, this could cause damage.

Assemble the item as close to its final position (in the same area) as possible.

Do not place furniture directly in front of radiators, fires, or any other source of heat.

The assembly will be easier with 2 people while 1 person could also do the job.

Refer to the LISTING page for specific installation videos.

Cleaning & Maintenance

- Clean the product with a solution of mild soap and water. Dip a soft cloth or sponge into the solution and wipe down the entire surface.
- After cleaning, thoroughly rinse the furniture with water to remove any remaining soap residue.
- When not in use, cover the product with a protective cover to keep it clean and prolong its lifespan.