141 FC-i
OPERATING MANUAL

ENGLISH

WELDING IN AMERICA.
SINCE THE BEGINNING.

ITEM# 262
REV 04.27.2026

FOUR WAYS TO ORDER

Web: www.forneyind.com

Phone: 800-521-6038

Fax: 970-498-9505

Mail: Forney Industries
2057 Vermont Drive
Fort Collins, CO 80525

U.S. Facilities:
- Fort Collins, CO
- Vandalia, OH

The Forney Promise

At Forney Industries, we are unwavering in our commitment to your success, no matter your location, size or needs.

A Message from Our President & CEO

Thank you for choosing a Forney product.

Since 1932, Forney has been at the forefront of innovation and excellence in all facets of our business. J.D. Forney was an entrepreneur who invented the instant-heat soldering iron and the first 110-volt Arc Welder. For over 90 years, we have continued this legacy, introducing our latest welding machines, plasma cutters and several new metal working products for the retail and industrial sectors.

When you choose Forney, you are investing in reliability, dependability, and quality, backed by a dedicated team:

- Our Expert-Tech® team of engineers and technicians are just a phone call away anytime you need help with a Forney machine or have questions about our products and accessories.
- The Forney Customer Service team is staffed Monday through Friday from 7am – 5pm Mountain Time to address any questions regarding products, services, or account maintenance.
- Our Product Development and Marketing Teams communicate new, innovative products on a regular basis. Learn about our newest product innovations by signing up for our emails at www.Forneyind.com.

At Forney, we are dedicated to surpassing your expectations. Because, when our customers succeed, we succeed.

Steven G. Anderson

STEVEN G. ANDERSON, President & CEO
FORNEY INDUSTRIES, INC.

Copyright© 2026 Forney Industries, Inc. All rights reserved. Unauthorized reproduction and/or distribution is subject to US copyright laws.

TECHNICAL ISSUES?

FORNEY CAN HELP!

Thank you for choosing Forney! Please note: The store you purchased this machine from DOES NOT handle product returns. Forney Industries will repair or replace defective products at no charge to you that are under warranty!

When you call Forney's Technical Service department, you will speak to a trained product and application expert. Forney's primary goal is to get your machine up and running in as little time as possible. In fact, the majority of issues can be fixed over the phone! Please be near your machine when you call, so the Forney technician can guide you.

Speaking to a Forney Technician directly helps us gather better data, and improve our products. It is our highest priority to ensure our customers are cared for.

WE MAKE IT EASY!

Please contact Forney Industries Technical Service at 800-521-6038 Ext. 2 or customerservice@forneyind.com for inquiries, technical and general questions.

Table of Contents

THE FORNEY PROMISE **2**
EXPERT-TECH® INFORMATION **3**
TABLE OF CONTENTS **4**
READ MANUAL **5**
SYMBOLS LEGEND **5**
SAFETY SUMMARY **6**
PRINCIPAL SAFETY STANDARDS 6
CALIFORNIA PROPOSITION 65 WARNING 6
ELECTROMAGNETIC FIELD INFORMATION 6
PERSONAL PROTECTION 7
FIRE PREVENTION 8
HIGH-FREQUENCY RADIATION 9
ELECTRIC SHOCK 9
NOISE 10
ADDITIONAL SAFETY INFORMATION 10
BOX CONTENTS **11**
INSTALLATION **12**
MACHINE SPECIFICATIONS 12
SITE SELECTION 12
CONNECT INPUT POWER 12
GROUNDING REQUIREMENTS 13
GENERATORS 13
EXTENSION CORDS 13
VENTILATION 13
ADDITIONAL WARNINGS 13
GETTING TO KNOW YOUR MACHINE **14**
DESCRIPTION 14
MACHINE LAYOUT AND CONTROLS 14
MIG
INSTALLING THE WELDING WIRE 16
SETUP FOR USE WITH 4″ AND 8″ SPOOLS 17
FEEDING THE WIRE THROUGH THE MIG GUN 18
OPERATION **20**
PERFORMANCE DATA PLATE & DUTY-CYCLE 20
INTERNAL THERMAL PROTECTION 21
WELDING AND CUTTING PREPARATION 21
GROUND CLAMP CONNECTION 21
MIG
FACTORS TO CONSIDER FOR BEST MIG WELDING RESULTS 22
WELDING WIRE SELECTION 22
SETUP FOR FLUX-CORE WIRE (FCAW) WELDING 22
MAINTENANCE & SERVICING **23**
GENERAL MAINTENANCE 23
MIG
CONSUMABLE AND MACHINE MAINTENANCE 23
TROUBLESHOOTING **24**
MACHINE PARTS DIAGRAM & CONSUMABLES DIAGRAM **27**

CAUTION!

BEFORE INSTALLING, OPERATING OR CARRYING OUT MAINTENANCE ON THE MACHINE, READ THE CONTENTS OF THIS MANUAL CAREFULLY, PAYING PARTICULAR ATTENTION TO THE SAFETY RULES AND HAZARDS.

In the event of these instructions not being clear, please contact your Forney Authorized Dealer or Forney Customer Service 1-800-521-6038.

Symbols Legend

SYMBOL	MEANING	SYMBOL	MEANING	SYMBOL	MEANING
	ARC RAYS HAZARD		FIRE HAZARD		NOISE HAZARD
	POISON HAZARD		ELECTRICAL HAZARD		WARNING/CAUTION
	BURN HAZARD		ELECTROMAGNETIC INTERFERENCE		EXPLOSION HAZARD
	FALLING EQUIPMENT HAZARD		FUMES, VAPORS, GASSES HAZARD		HF RADIATION INTERFERENCE
	MAGNETIC FIELD HAZARD		MOVING PARTS HAZARD		OVERHEATING HAZARD
	PERSONAL PROTECTIVE EQUIPMENT NEEDED		PLASMA ARC CUTTING		PLASMA CUTTING TORCH TRIGGERED
%	PULSE (% ON)		MIG (GMAW)	V	INPUT VOLTAGE
	STICK (SMAW)		TEMPERATURE		LINE CONNECTION
	TIG (GTAW)	V	VOLTAGE	1~	SINGLE PHASE ALTERNATING CURRENT (AC)
+	POSITIVE DINSE	A	AMPERAGE	⎓	DIRECT CURRENT (DC)
−	NEGATIVE DINSE		WIRE-FEED	S	SUITABLE FOR USE IN AN ENVIRONMENT WITH INCREASED RISK OF ELECTRIC SHOCK
	MATERIAL THICKNESS		FLUX-CORE (FCAW)	I	ON / O OFF

Safety Summary

The data within this safety summary are highlights of various safety standards. It is recommended that you familiarize yourself with the standards listed below before use.

Principal Safety Standards

- ANSI Z49.1: SAFETY IN WELDING AND CUTTING - Obtainable from the American Welding Society, 550 NW Le Jeune Road, Miami, FL 33126 Telephone (800) 443-9353, Fax (305) 443-7559 - www.aws.org.
- OSHA 29 CFR, Part 1910, Subpart Q.: WELDING, CUTTING AND BRAZING - Obtainable from your state OSHA office or U.S. Dept. of Labor OSHA, Office of Public Affairs, Room N3647, 200 Constitution Ave., Washington, DC 20210 - www.osha.gov.
- AWS F4.1: SAFE PRACTICES FOR THE PREPARATION FOR WELDING AND CUTTING OF CONTAINERS AND PIPING FOR WELDING AND CUTTING. - Obtainable from the American Welding Society, 550 NW Le Jeune Road, Miami, FL 33126 Telephone (800) 443-9353, Fax (305) 443-7559 - www.aws.org.
- AWS A6.0. WELDING AND CUTTING CONTAINERS WHICH HAVE HELD COMBUSTIBLES - Obtainable from the American Welding Society, 550 NW Le Jeune Road, Miami, FL 33126 Telephone (800) 443-9353, Fax (305) 443-7559 - www.aws.org.
- NFPA 70: NATIONAL ELECTRICAL CODE - Obtainable from the National Fire Protection Association, 1 Batterymarch Park, P.O. Box 9101, Quincy, MA 02269-9101 Telephone (617) 770-3000 Fax (617) 770-0700 - www.nfpa.org.
- CGA Publication P-1: SAFE HANDLING OF COMPRESSED GASES IN CONTAINERS - Obtainable from Compressed Gas Association, 14501 George Carter Way, Suite 103, Chantilly, VA 20151 Telephone (703) 788-2700 Fax (703) 961-1831 - www.cganet.com.
- CSA W117.2 - Code for SAFETY IN WELDING AND CUTTING. - Obtainable from Canadian Standards Association, 178 Rexdale Blvd., Etobicoke, Ontario M9W 1R3 - www.csa.ca.
- ANSI Z87.1 - SAFE PRACTICE FOR OCCUPATION AND EDUCATIONAL EYE AND FACE PROTECTION - Obtainable from the American National Standards Institute, 11 West 42nd St., New York, NY 10036 Telephone (212) 642-900, Fax (212) 398-0023 - www.ansi.org.
- NFPA 51B: STANDARD FOR FIRE PREVENTION DURING WELDING, CUTTING, AND OTHER HOT WORK- Obtainable from the National Fire Protection Association, 1 Batterymarch Park, P.O. Box 9101, Quincy, MA 02269-9101 Telephone (617) 770-3000 Fax (617) 770-0700 - www.nfpa.org.
- AWS C5.2 - RECOMMENDED PRACTICES FOR PLASMA ARC CUTTING AND GOUGING - obtainable from the American Welding Society, 550 NW Le Jeune Road, Miami, FL 33126 Telephone (800) 443-9353, Fax (305) 443-7559 - www.aws.org.

California Proposition 65 Warning

⚠ **WARNING:** This product can expose you to chemicals including lead, which are known to the State of California to cause cancer and birth defects or other reproductive harm. For more information go to www.P65Warnings.ca.gov. P65 details at forneyind.com. Wash hands after use.

EMF Information

Welding or cutting current, as it flows through the cables, will cause electromagnetic fields. There has been and still is some concern about such fields. However, after examination, the committee of the National Research Council concluded that: "The body of evidence, in the committee's judgment, has not demonstrated that exposure to power-frequency electric and a magnetic field is a human health hazard." However, studies are still going forth and evidence continues to be examined. Until the final conclusions of the research are reached, you may wish to minimize your exposure to electromagnetic fields when using machine.

To reduce magnetic fields in the workplace, use the following procedures:

1. Keep electrode and ground cables close together by twisting or taping them when possible.
2. Arrange cables to one side and away from the operator.
3. Do not coil or drape cables around your body.
4. Keep power source and cables as far away from operator as practical.
5. Connect ground clamp to workpiece as close to the cut or weld as possible.

ABOUT PACEMAKERS & HEARING AIDS: If you wear a pacemaker or hearing aids, please consult your doctor before using this product. If cleared by your doctor, following the above procedures is recommended.

Computers and computer driven equipment can be harmed with electromagnetic fields.

- Be sure all equipment is compatible with electromagnetic energy.
- Keep cables short to reduce interference.
- Follow manual to install and ground machine.
- If interference continues, shield the work area or move the machine.
- Locate cutting operation 100 meters from any sensitive electronic equipment.

Personal Protection

THE WELDING AND PLASMA CUTTING PROCESSES PRODUCES VERY BRIGHT ULTRAVIOLET AND INFRARED LIGHT. THESE ARC RAYS WILL DAMAGE YOUR EYES AND BURN YOUR SKIN IF YOU ARE NOT PROPERLY PROTECTED. To reduce the risk of injury from arc rays, read, understand, and follow the safety instructions. In addition, please ensure anyone using this equipment or located near the work area understands and follows the safety precautions listed below.

- Helmets and filter should conform to ANSI Z87.1 standards.
- Do not look at a welding or plasma cutting arc without proper eye protection. A welding and plasma cutting arc is extremely bright and intense. Without adequate eye protection, your retinas may be severely burned, leaving permanent dark spots in your field of vision. Refer to ANSI Z49.1 or OSHA 29CFR for proper eye protection recommendations.
- Provide shields or helmets fitted with an appropriate shade filter lens to any bystanders.
- Do not strike an arc until all bystanders and the operator have shields and/or helmets in place.
- Do not wear a cracked or broken helmet and replace any cracked or broken filter lenses immediately.
- Do not allow the uninsulated portion of the MIG torch, TIG torch, Plasma torch or Electrode holder to touch the ground clamp or grounded workpiece to prevent an arc flash from being created on contact.
- Wear appropriate protective clothing. The intense light of the welding and plasma cutting arc can burn the skin in much the same way as the sun, even through lightweight clothing. Wear dark clothing made of heavy materials. The shirt worn should be long sleeved and the collar kept buttoned to protect your chest and neck.
- Protect yourself against reflected arc rays. Arc rays can be reflected off shiny surfaces such as a glossy painted surface, aluminum, stainless steel and glass. It is possible for your eyes to be injured by reflected arc rays even when wearing a protective helmet or shield. If working with a reflective surface behind you, arc rays may bounce off the surface and off the filter lens. These may enter your helmet or shield and damage your eyes. If a reflective background exists in your work area, either remove it or cover it with something non-flammable and non-reflective. Reflective arc rays may burn your skin in addition to damaging your eyes.
- Flying sparks may cause injuries to you or any bystanders. To avoid this, always wear approved safety glasses with side shields under your helmet or shield. Wear proper protection and work in a safe location whenever you shape a tungsten electrode on the grinder. Always keep flammables at a safe distance to prevent flying sparks from starting a fire.
- The heat and force from the plasma arc may cause serious burns. The danger of injury is greatly increased by the intensely hot and powerful arc, which can easily cut though gloves and tissue. To prevent injury, use the following precautions:
  - A. Keep away from the torch CUTTING TIP.
  - B. Do not grip material near the cutting path.
  - C. The pilot arc may cause burns - keep away from torch CUTTING TIP when trigger is pressed.
  - D. Wear proper flame-resistant clothing covering all exposed body areas.
  - E. Point PLASMA TORCH away from your body and toward workpiece when pressing the torch trigger – pilot arc comes on immediately.
  - F. Turn OFF machine and disconnect INPUT POWER CABLE before removing SHIELD CUP, changing torch consumables or disassembling PLASMA TORCH.
  - G. Use only the PLASMA TORCH that came with your plasma cutting machine or a certified replacement.

WARNING: FUMES, GASSES AND VAPORS MAY CAUSE DISCOMFORT, ILLNESS OR DEATH!

To reduce the risk of injury or death, read, understand, and follow these safety instructions. In addition, ensure anyone using this equipment or located near the work area also understands and follows the safety precautions listed below.

- Read and understand manufacturers Safety Data Sheets (SDS) and Material Safety Data Sheets (MSDS).
- Do not weld or plasma cut in an area until it is checked for adequate ventilation as described in ANSI standard Z49.1. If ventilation is not adequate to exchange all fumes and gasses generated during the welding or cutting process with fresh air, do not weld or cut unless you and all bystanders are wearing air-supplied respirators.

- Do not heat metals coated with, or that contain, materials that produce toxic fumes (such as galvanized steel), unless the coating is removed. Ensure the area is well ventilated, and the operator and all bystanders are wearing air-supplied respirators.
- When cutting aluminum underwater or with the water touching the underside of the aluminum, free hydrogen gas may collect under the workpiece and cause an explosion or injury.
- Do not weld, cut or heat lead, zinc, cadmium, mercury, beryllium, antimony, cobalt, manganese, selenium, arsenic, copper, silver, barium, chromium, vanadium, nickel, or similar metals without seeking professional advice and inspection of the ventilation of the work area. These metals produce extremely toxic fumes which can cause discomfort, illness or death.
- Do not weld or cut in areas that are near chlorinated solvents. Vapors from chlorinated hydrocarbons, such as trichloroethylene and perchloroethylene, may be decomposed by the heat of an electric arc or its ultraviolet radiation. These actions may cause phosgene, a highly toxic gas to form, along with other lung and eye-irritating gasses. Do not weld or cut where these solvent vapors may be drawn into the work area or where ultraviolet radiation may penetrate areas containing even very small amounts of these vapors.
- Do not use machine in a confined area unless there is proper ventilation or the operator (and anyone else in the area) is wearing an air-supplied respirator.
- Stop using immediately if you experience eye, nose or throat irritation, as this may indicate inadequate ventilation. Stop work and take necessary steps to improve ventilation in the work area. Do not resume use if physical discomfort persists.

Fire Prevention

WARNING: FIRE OR EXPLOSION MAY CAUSE DEATH, INJURY OR PROPERTY DAMAGE! To reduce these risks, read, understand and follow these safety precautions. In addition, ensure anyone using this equipment or located near the work area also understands and follows the safety precautions listed below. NOTE: Arc welding and plasma cutting by nature produces sparks, hot spatter, molten metal drops, hot slag and hot metal parts that may start fires, burn skin and damage eyes.

- Do not wear gloves or other clothing that contains oil, grease, or other flammable substances.
- Do not wear flammable hair products or accessories.
- Do not touch the hot weld bead, weld puddle or work material until it has fully cooled.
- When plasma cutting aluminum underwater or with the water touching the underside of the aluminum, free hydrogen gas may collect under the workpiece and cause an explosion.
- Do not weld or cut in an area until it is checked and cleared of combustible and/or flammable materials. Be aware that sparks and slag may fly 35 ft and can pass through small cracks and openings. If work and combustibles cannot be separated by a minimum of 35 ft, protect against ignition with suitable, snug-fitting, fire resistant covers or shields.
- Do not weld or cut into walls before checking for and removing any combustibles touching the other side of the wall.
- Connect the ground cable to the workpiece as close as possible to the work area. Do not connect ground cables to building framing or other locations away from the work area. This increases the possibility of the electrical current passing through alternate circuits, creating a fire hazard and other safety hazards.
- Do not weld, cut or work on used barrels, drums, tanks, or any other containers where flammable or toxic substances have been stored. The techniques used to remove flammable substances and vapors to make used containers safe for welding or cutting are quite complex and require specialized training. Never allow any electrically "hot" parts to touch a cylinder. Doing so will create a brittle area capable of becoming a violent rupture.
- Ensure any compressed gas cylinders in the work area have properly operating regulators rated for the gas and pressure used. All hoses, fittings, etc. should be in good condition.
- Do not stand in front of or put your head or face in front of a cylinder valve outlet when opening the valve.
- If a cylinder is not in use or connected for use, keep a valve protection cap in place to protect the valve.
- Keep cylinders upright and securely chain them to a fixed support to prevent tipping.
- Keep cylinders away from areas where they may be subjected to physical damage or accidentally struck. Keep them a safe distance from any source of flame, sparks or heat.
- Do not weld or cut in an area where the air may contain flammable dust (such as grain dust), gas or liquid vapors (such as gasoline).
- Never handle hot metal, such as the workpiece or electrode stubs, with bare hands.
- Always wear leather gloves, a heavy long-sleeved shirt, cuffless pants, high-topped and closed-toed shoes, a helmet and welding cap when operating this product. Use additional fire-resistant protective clothing to cover and protect the upper and lower body as needed. Hot sparks or metal may become lodged in rolled up sleeves, pant cuffs or

pockets. Keep your sleeves and collars buttoned at all times and use a shirt without pockets on the front. Keep long hair securely pulled back.

- Have fire extinguisher equipment handy in case of an emergency. A portable chemical fire extinguisher, type ABC, is recommended.
- Wear ear plugs when welding or cutting overhead to prevent spatter or slag from falling into your ears.
- Choose a work area with a solid, safe floor. Concrete or masonry is recommended. Avoid floors that are tiled, carpeted or containing any flammable material.
- Protect flammable walls, ceilings and floors with heat-resistant covers or shields.
- Always ensure your work area is free of sparks, flames or glowing metal or slag before leaving the area.
- Remove any combustibles such as lighters and matches before doing any welding or cutting.
- Do not overload building wiring – ensure the building power supply system is properly sized, rated and protected to handle this unit.
- Always ensure your work area is free of sparks, flames or glowing metal or slag before leaving the area.
- Follow OSHA and NFPA requirements for hot work and always keep an extinguisher nearby.

High-Frequency Radiation

- High-Frequency (H.F) can interfere with radio navigation, safety services, computers and communication equipment.
- It is your responsibility to have a qualified electrician promptly correct any interference problems resulting from the installation. An electrician should regularly check and maintain the installation.
- Stop using the equipment if notified by the FCC about interference.
- Keep H.F. source doors and panels tightly shut and keep spark gaps at the correct setting.

Electric Shock

WARNING: ELECTRIC SHOCK CAN KILL! To reduce the risk of death or serious injury from shock, read, understand and follow these safety instructions. In addition, ensure anyone using this equipment or located near the work area also understands and follows the safety precautions listed below.

WARNING: TO REDUCE THE RISK OF DEATH, INJURY OR PROPERTY DAMAGE, DO NOT ATTEMPT OPERATING the equipment until you have read and understand the following safety summary.

- Never make physical contact with any part of the welding or cutting current circuit. The welding and cutting current circuit includes:
  a. The workpiece or any conductive material in contact with the welding/cutting current.
  b. The ground clamp.
  c. The electrode or welding wire.
  d. Any metal parts on the electrode holder, TIG torch, MIG gun, or Plasma Torch.
- Plasma arc cutting requires higher voltages than welding to start and maintain the arc (200 to 400 volts DC are common). It also uses a plasma torch designed with safety interlock systems which turn the machine output off when the SHIELD CUP is loosened or if the CUTTING TIP touches the ELECTRODE during operation. Incorrectly installed or improperly grounded equipment is hazardous.
- Do not weld or cut in a damp area or come in contact with a moist or wet surface.
- Do not attempt to weld or cut if any part of your body or clothing is wet.
- Do not allow the machine to come in contact with water or moisture.
- Do not drag cables, MIG gun, TIG torch, Plasma torch, or machine's INPUT POWER CABLE through, or allow them to come into contact with, water or moisture.
- Do not touch the machine, or attempt to turn the equipment ON or OFF, if any part of your body or clothing is moist or if you are in physical contact with water or moisture.
- Do not attempt to plug the machine into the power source if any part of your body or clothing is wet or moist, or if you are in physical contact with water or moisture.
- Do not connect the ground clamp to electrical conduit and do not weld or cut on electrical conduit.
- Do not alter the INPUT POWER CABLE or plug in any way.
- Do not attempt to plug the machine into the power source if the ground prong on INPUT POWER CABLE plug is bent over, broken off or missing.

- Do not allow the machine to be connected to the power source or attempt to use if the machine, cables, work site or machine's INPUT POWER CABLE are exposed to any form of atmospheric precipitation or salt water spray.
- Do not carry coiled cables around your shoulders or any other part of your body when they are plugged into the machine.
- Do not modify any wiring, ground connections, switches or fuses in this equipment.
- Wear welding gloves to help insulate your hands from electrical circuit.
- Keep all liquid containers away from the machine and work area to prevent liquids from coming into contact with any part of the machine or electrical circuit.
- Immediately replace any cracked or damaged parts that are insulated or act as insulators, such as cables, INPUT POWER CABLE, Plasma torch or electrode holder.
- When not MIG welding, cut the wire back to the contact tip. When not stick or TIG welding, remove the electrode from the electrode holder or TIG torch.

Noise

WARNING: Noise can cause permanent hearing loss. Welding and plasma cutting processes may create noise levels that exceed safe limits. You must always protect your ears from loud noise while operating this machine to prevent permanent hearing loss.

- To protect your hearing from loud noise, wear protective ear plugs and/or earmuffs.
- Noise levels should be measured to ensure the decibels (sound intensity) do not exceed safe levels.

Additional Safety Information

For additional information concerning welding and plasma cutting safety, refer to the standards listed at the beginning of this safety summary.

Box Contents

ITEM	DESCRIPTION	ITEM	DESCRIPTION	ITEM	DESCRIPTION
	Machine		15-20A Plug Adapter		Nylon Carry Strap
ITEM	**DESCRIPTION**	**ITEM**	**DESCRIPTION**	**ITEM**	**DESCRIPTION**
	Integrated 8′ MIG Gun		Contact Tips .030″x1 .035″ x1		6′ Ground Clamp with Lead
ITEM	**DESCRIPTION**				
	Installed .030″/.035″ K Drive-Roll				

Installation

Machine Specifications

Primary (Input) Volts	120VAC
Phase	Single
Frequency	50/60Hz
Maximum Output	140A
Recommended Circuit Breaker	20A time-delay (slow-blow) breaker minimum (30A for maximum performance) Refer to the ratings label and set the output amperage so that the listed input amperage is not exceeded.
Extension Cord Recommendations	3 conductor #12 AWG or larger up to 25′.
Generator Requirements	Minimum 4,000W continuous output with no low-idle function (or low-idle off), 5% THD Max
CSA Rated Output and Duty-cycle	Refer to the data plate of your machine and the Duty-cycle section of this manual
Weight	18.6 lbs. (8,4 kg)
Dimensions	18.4″ (466mm) X 8.3″ (211mm) X 11.7″ (296mm)
Recommended Diameter	Wire Diameter: Up to .035″ (0,9mm)

Site Selection

BE SURE TO LOCATE THE WELDER ACCORDING TO THE FOLLOWING GUIDELINES:

- Position your machine near a 120V electrical outlet.
- Place at a distance of 12″ or more from walls or similar obstructions that could restrict natural airflow for cooling.
- Arrange an open space workspace of at least 15′ (5m) near the machine.
- In areas free from moisture and dust.
- In areas with ambient temperature between 30° to 90°F.
- In areas free from oil, steam and corrosive gases.
- In areas not subjected to abnormal vibration or shock.
- In areas not exposed to direct sunlight or rain.
- If the machine must be moved, always disconnect the INPUT POWER CABLE from the electrical outlet and gather the cables so as not to damage them.

Connect Input Power

Before you make any electrical connection, ensure the POWER SWITCH is OFF and the electrical circuit ratings meet those stated in the ratings label of your machine.

The main supply voltage should be within ±10% of the rated main supply voltage. Too low of a supply voltage may cause poor performance. Too high of a supply voltage will cause components to overheat and possibly fail. The electrical outlet must be:

- Correctly installed, if necessary, by a qualified electrician;
- Correctly grounded (electrically) in accordance with national and local regulations;
- Connected to an electric circuit that is rated for sufficient amperage per the ratings label of your machine.
- Check the electrical outlet for proper output voltage.
- Plug in the INPUT POWER CABLE to a 120V 20A electrical outlet (with a 30A time-delay breaker).
- A 120V 15A electrical outlet (with a 20A time-delay breaker) can be used with supplied adapter at lower output amperage settings.

If you are unsure of any of the above, have your outlet inspected by a qualified electrician before using the machine.

CHECK LOCAL AND NATIONAL ELECTRICAL CODES TO BE SURE THE USE OF A 30A BREAKER WITH A 20A ELECTRICAL OUTLET IS ALLOWABLE IN YOUR AREA.

NOTE:

- Periodically inspect the INPUT POWER CABLE for any cracks or exposed wires. If it is not in good condition, have it repaired by a Service Center.
- Do not cut off the grounding prong or alter the plug in any way. Only use the included adapter between the machine's INPUT POWER CABLE and the power source receptacle.

- Do not violently pull the INPUT POWER CABLE to disconnect it from electrical outlet.
- Do not lay material or tools on the INPUT POWER CABLE. The cable may be damaged and result in electrical shock.
- Keep the INPUT POWER CABLE away from heat sources, oils, solvents and sharp edges.
- Do not use this machine on a circuit with a Ground Fault Circuit Interrupter (GFCI). GFCIs are tripped by welding and cutting arcs and your operations will be interrupted regularly

Grounding Requirements

- To ensure personal safety, proper operation and to reduce electromagnetic interference (EMI), the machine must be properly grounded.
- The machine must be grounded through the INPUT POWER CABLE according to national and local electrical standards.
- Single-phase service must be of the 3-wire type with a green or green/yellow wire for the protective earth ground. Do not use 2-wire service.

Generators

This machine can be operated from an AC generator. The generator must supply a minimum of 4,000W of continuous output. Do not use a generator with an auto-idle fuel saving feature unless it has the option to turn auto-idle off. The generator must always run at full speed while your machine is plugged into it to avoid damaging your machine. Any other power draws on the generator or anything that could reduce the generator RPM, may damage your machine. If the Total Harmonic Distortion (THD) of the generator exceeds 5% THD, it may damage your machine.

Extension Cords

For optimum machine performance, an extension cord should not be used unless absolutely necessary. If necessary, care must be taken in selecting an extension cord appropriate for use with your specific machine.

Select a properly grounded extension cord that will connect directly with the AC power source receptacle and the machine INPUT POWER CABLE. Use only the included adapter if necessary to adapt the machine's INPUT POWER CABLE and the extension cord. Ensure that the extension cord is properly wired and in good electrical condition. Extension cords must fit the following wire size guidelines:

- Use #12 AWG or larger wire.
- Do not use an extension cord over 25′ in length.

Ventilation

Since the inhalation of toxic fumes may be harmful, ensure that your work area is properly ventilated. See SAFETY SUMMARY of this manual for more details.

Additional Warnings

FOR YOUR SAFETY, CLOSELY FOLLOW THESE INSTRUCTIONS BEFORE CONNECTING THE POWER SOURCE TO THE OUTLET:

- An adequate two-pole breaker must be inserted before the main outlet. This breaker must be equipped with time-delay fuses.
- When working in a confined space, the machine must be kept outside the work area and the ground cable should be fixed to the workpiece. Never work in a damp or wet confined space.
- Do not use a damaged INPUT POWER CABLE or damaged cables.
- The welding or cutting torch/electrode should never be pointed at the operator or other people.
- The machine must never be operated without its panels attached. This could cause serious injury to the operator and could damage the equipment.

Getting to Know Your Machine

Description

Your new Forney Easy Weld® 141 FC-i is backed by our Colorado-based Expert-Tech® service and has been rated by CSA, certifying its safety and welding output. The unit is factory-configured to run flux-core wire, negating the need for shielding gas. This means you can weld anywhere you have power. Its ability to run off standard household power or a generator allows it to fit into any shop. The 140A of welding output allows for single pass welding of mild steel up to 1/4". With a lightweight design and a nylon carrying strap, you can easily and comfortably take your welder wherever you need. This machine also features a simple, two-knob interface that makes it easy to use, even with a gloved hand. Additionally, this Easy Weld® machine is backed by a 1-year warranty.

Machine Layout and Controls

1. **INDICATOR LIGHTS:**
   a. **INPUT VOLTAGE LIGHT:** Will be lit when input power is present.
   b. **TEMPERATURE LIGHT:** Will be lit solid if machine has reached duty cycle. Will flash if MIG gun trigger was pulled before machine was powered on.
2. **VOLTAGE ADJUSTMENT KNOB:** Adjust the voltage by turning the knob to the desired setting (See settings chart inside cabinet).
3. **WIRE FEED SPEED ADJUSTMENT KNOB:** Adjust the speed at which the wire is being pushed.
4. **GROUND CABLE ATTACHMENT:** 25mm dinse connector.
5. **INTEGRATED MIG GUN**
6. **WIRE SPOOL SPINDLE**
7. **TWO-ROLL WIRE FEEDER**
8. **POWER CORD:** Fitted with a NEMA 5-20 style plug.
9. **POWER SWITCH:** Turns the machine ON and OFF. (Make sure the POWER SWITCH is in the OFF position before performing any maintenance on the machine).

FRONT VIEW OF FORNEY EASY WELD® 141 FC-i

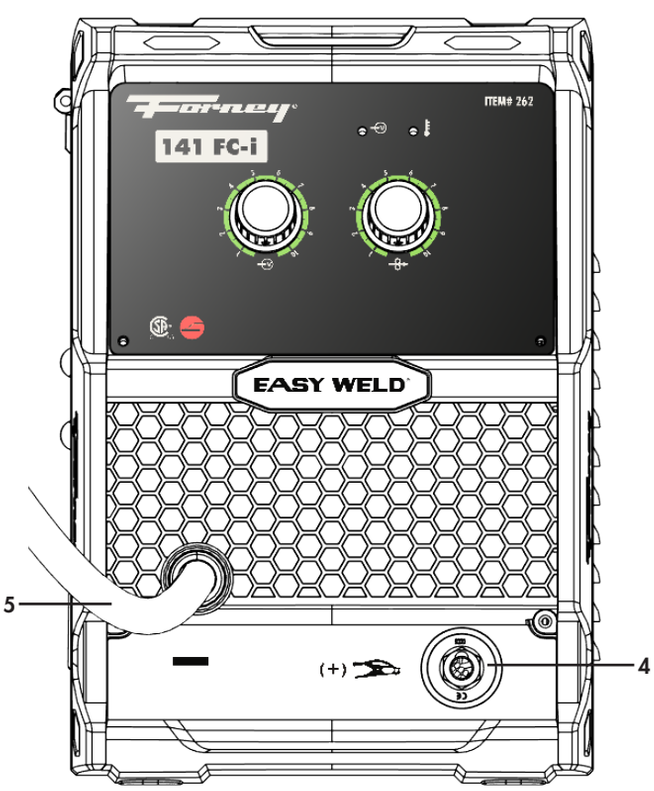

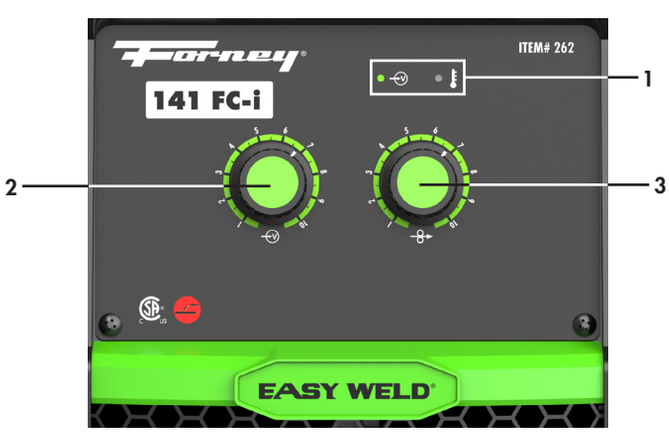

REAR VIEW OF FORNEY EASY WELD® 141 FC-i

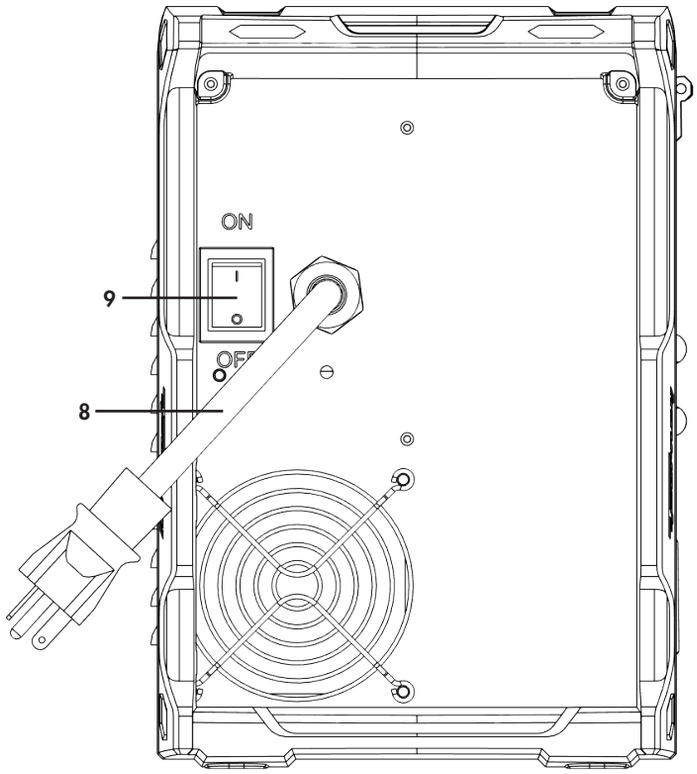

SIDE VIEW OF FORNEY EASY WELD® 141 FC-i

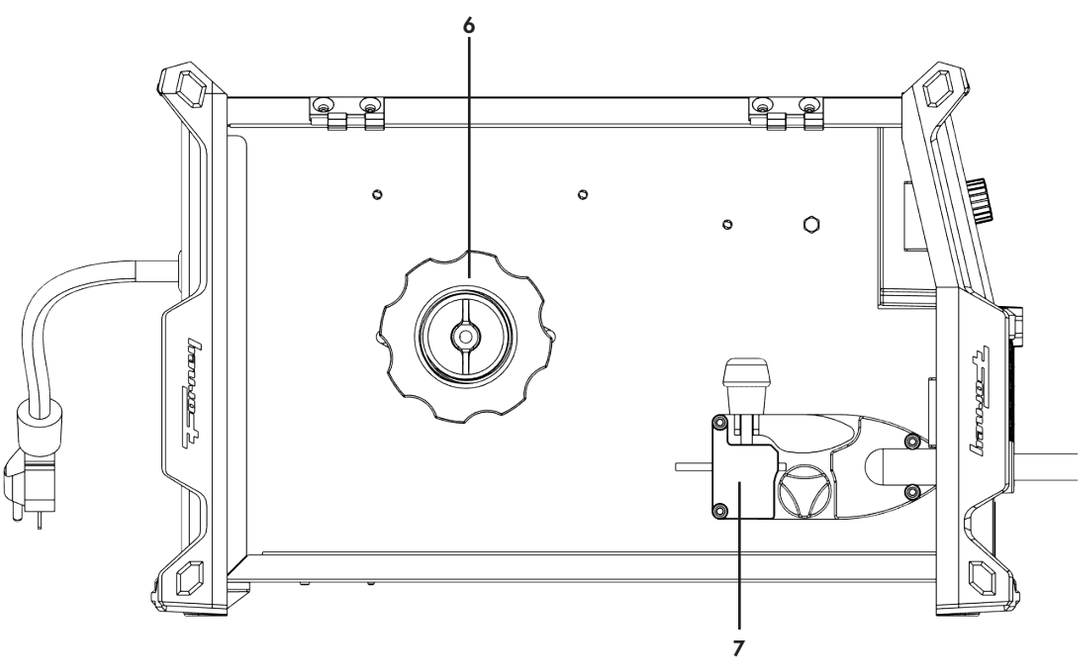

Installing the Welding Wire

ENSURE ELECTRICAL SUPPLY IS DISCONNECTED. Before proceeding, remove the nozzle and the contact tip from the gun.

WARNING: ELECTRIC SHOCK CAN KILL! Always turn the ON/OFF SWITCH to the OFF position and unplug the welder's INPUT POWER CABLE from the AC power source before installing wire. When the gun trigger is depressed, the drive rolls, spool of wire, wire being fed and electrode are all electrically live (hot).

NO.	PART NUMBER	ITEM DESCRIPTION	NO.	PART NUMBER	ITEM DESCRIPTION
1	60171	Tip (Tweco® 11-30)	2	85793	Diffuser
	60172	Tip (Tweco® 11-35)	3	85332	Flux-Core Welder Nozzle

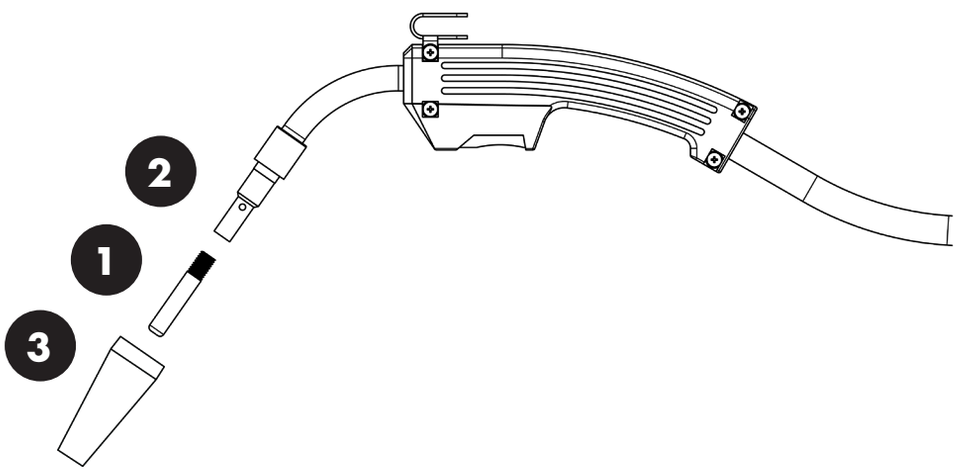

Setup for Use With 4″ and 8″ Spools:

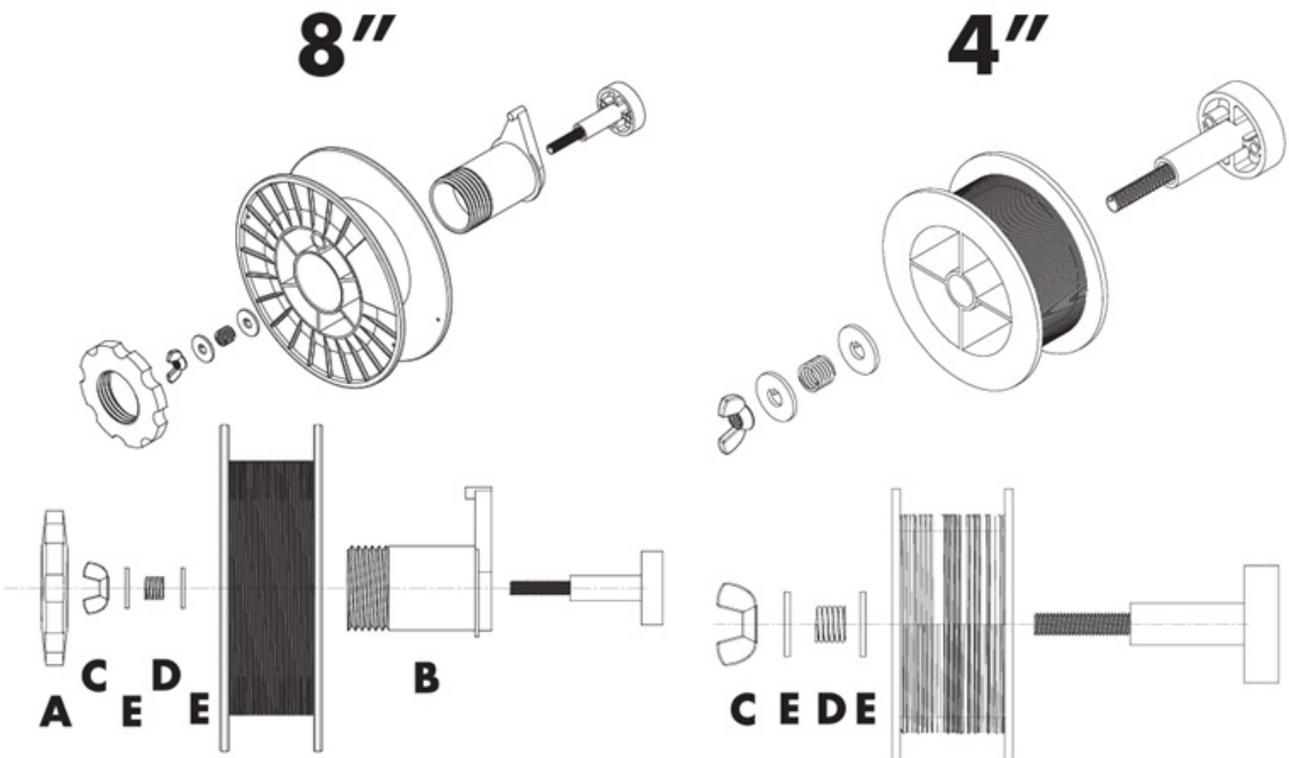

NOTE: These steps assume the despooler is completely assembled for the 8″ spool arrangement (default configuration from the factory).

INSTALLING 4″ SPOOL (SEE FIGURE FOR PART IDENTIFICATION):

1. Open the wire cabinet door.
2. Remove the nut (C), spring (D) and washers (E).
3. Remove the spindle adapter (B) and wire spool retention cap (A) for 8″ spools and store them someplace safe.
4. Remove the outer wrapping from the spool of wire and then find the leading end of the wire (it goes through a hole in the outer edge of the spool and is bent over the spool edge to prevent the wire from unspooling) but do not unhook it yet.
5. Place the spool on the WIRE SPOOL SPINDLE (number 6 under the Machine Layout and Controls section) in such a manner that when the wire comes off the spool, it will look like the illustration on the next page. The wire should unspool from the bottom, and the spool will rotate in a counter-clockwise fashion.
6. Place the washers (E) and spring (D) back in place and apply tension with the wing nut (C). It will look like the illustration above when done correctly.
7. Proceed to the "Feeding Wire Through the MIG gun" instructions.

INSTALLING 8″ SPOOL (SEE FIGURE FOR PART IDENTIFICATION):

1. Open the wire cabinet door.
2. Unscrew and remove the wire spool retention cap (A).
   NOTE: If the wire spool retention cap and the spindle adapter for 8″ spools (B) are not present (machine was last used with a 4″ spool), put the spindle adapter for 8″ spools back in place.
3. Make sure all of the components used for a 4″ spool are still in place. They are necessary for 8″ spools as well (nut (C), spring (D) and washers (E).
4. Remove the outer wrapping from the spool of wire and then find the leading end of the wire (it goes through a hole in the outer edge of the spool and is bent over the spool edge to prevent the wire from unspooling) but do

not unhook it yet.

5. Place the spool on the spindle adapter for 8″ spools in such a manner that when the wire comes off the spool, it will look like the illustration below. The wire should unspool from the bottom and the spool will rotate in a counter-clockwise fashion.
   NOTE: Be sure the alignment pin near the base of the spindle adapter for 8″ spools is inserted in the corresponding hole on the spool.
6. Thread the wire spool retention cap (A) back in place.

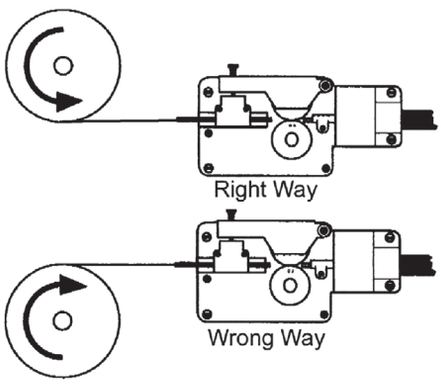

FEEDING WIRE THROUGH THE MIG GUN:

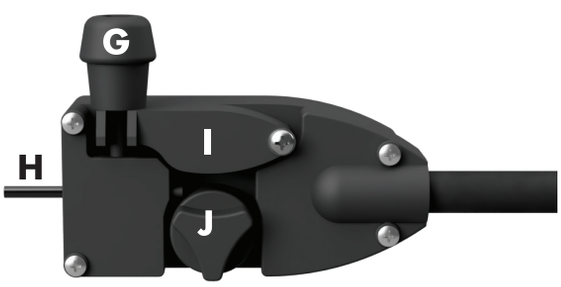

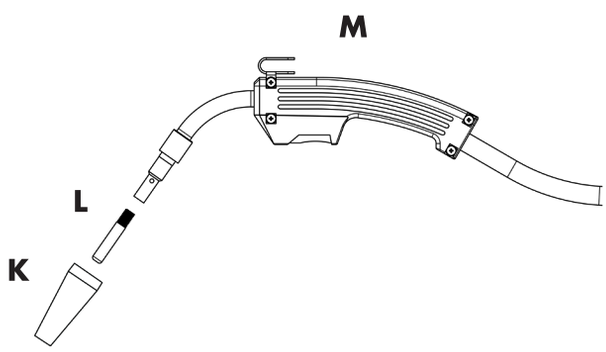

1. Unhook the wire from the spool and hold the wire end while preventing the spool from turning with one hand.
2. While holding the wire in place, use a wire cutter to cut the bent end of the wire so that only a straight end remains.
3. Continue to hold the wire end in one hand and release the drive roll pressure arm (I) by pulling the adjustment knob (G) toward you. With the drive roll pressure arm (I) up and off the drive roller, insert the leading end of the wire into the inlet guide tube (H). Push the wire across the drive roller (J) and into the gun towards the gun lead approximately 6″.
4. Line the wire up in the inside groove of the drive roller and push the drive pressure arm (I) back down onto the drive roller. Pull the adjustment knob (G) back over the pressure arm (I) and tighten (turn clockwise) the pressure adjusting knob until the pressure roller is applying enough force on the wire to prevent it from slipping out of the drive assembly. Aligning the nut in the top of the adjustment knob (G) to be flush with the threaded shaft is a good starting point for the recommended pressure (when the correct drive roll is used with the wire in use). **NOTE:** Too much pressure will cause wire-feeding problems and may burn out the wire-feed motor.
5. Let go of the wire.
6. Remove the nozzle (K) and contact tip (L) from the end of the gun assembly (M).

7. Plug the welder's INPUT POWER CABLE into the AC power source and power on the machine. Adjust the settings on the front panel per the setup chart on the inside panel door of the welding machine according to the size of the wire and workpiece.
8. Pull the trigger on the MIG gun to feed the wire through the gun assembly. Check if the drive roll is slipping on the wire and adjust pressure on the adjustment knob, if necessary. (See Expert-Tech® Tip below).
9. When at least an inch of wire sticks out past the end of the gun, release the trigger.
10. Slide the contact tip (L) over the wire protruding from the end of the gun (M). Screw the contact tip into the end of the gun and hand-tighten securely.
11. Install the nozzle (K) on the gun assembly.
12. Cut off the excess wire that extends past the end of the nozzle.
13. If necessary, make fine adjustments to the wire drive pressure by turning the adjustment knob (clockwise increases the drive pressure, counterclockwise decreases it) until the wire seems to feed smoothly without slipping.

Expert-Tech® Tip: You can check for optimal drive roll pressure by squeezing the wire between two gloved fingers with moderate force as it comes out of the gun. If this stops the wire from feeding, increase pressure until the wire feeds through your fingers without issue. If the wire feeds through your fingers at the beginning, decrease your pressure until the wire is stopped by your hand. Then increase slowly until it feeds through the fingers without issue. This ensures optimal drive roll pressure.

KEEP THE GUN STRAIGHT. WHEN FEEDING NEW WIRE THROUGH THE LINER, ENSURE THE WIRE IS CUT CLEANLY (NO BURRS OR ANGLES) AND THAT AT LEAST 1" FROM THE END IS STRAIGHT (NO CURVES). FAILURE TO FOLLOW THESE INSTRUCTIONS COULD CAUSE DAMAGE TO THE LINER.

WHEN CHECKING THE CORRECT EXIT OF THE WIRE FROM THE GUN, DO NOT BRING YOUR FACE NEAR THE GUN. YOU MAY RUN THE RISK OF BEING WOUNDED BY THE OUTGOING WIRE. DO NOT BRING YOUR FINGERS CLOSE TO THE FEEDING MECHANISM WHEN WORKING! THE ROLLS, WHEN MOVING, MAY CRUSH FINGERS. PERIODICALLY CHECK THE ROLLS. REPLACE THEM WHEN THEY ARE WORN AND COMPROMISE THE REGULAR FEEDING OF THE WIRE.

Operation

Performance Data Plate and Duty-Cycle

The data plate of a machine holds a lot of information. This includes the machine name, process and various duty cycle charts, among other things. While the below section does not show the actual data found on your machine, it does provide you with the tools needed to understand any data plate regardless of model or brand.

The duty-cycle rating of a machine defines how long the operator can work and how long the machine must rest and be cooled. Duty-cycles are expressed as a percentage of 10 minutes and represents the maximum work time allowed. The balance of the 10-minute cycle is required for cooling. It is common for machines to show three separate rates, showing the difference in duty cycle based on the set output. For example, using a machine with a duty-cycle rating of 30% at the rated output of 90A, you can weld/cut at 90A output for three (3) minutes out of 10 with the remaining seven (7) minutes required for cooling. A sample of the data plate can be found in the diagram below. A completed data plate with duty-cycle and other specifications can be found affixed to the machine. Referring to the sample below, J., K., and L. list duty-cycle percentages while P., Q., and R. list the output amperage and T., U., and V. list the output voltage. Various duty-cycles at other amperages/voltages are listed on your data plate.

The data plate also shows both the maximum amperage draw, Y., for a given input voltage, X. Data plates can be very complex and show duty cycle rates for different input voltages and breaker sizes. Pay close attention to the breaker on the circuit the machine is plugged into and follow the appropriate ratings. User settings on the machine may need to be reduced or limited to avoid exceeding the rated input amperage. Failure to do so could result in frequent breaker trips or electrical hazards.

Machines capable of multiple processes and/or multiple input powers will see sections F-Z, below, repeated on the data plate for every combination of process and input power (voltage and breaker size) the machine is capable of.

Forney Industries 2057 Vermont Drive, Fort Collins, CO 80525 A					
B Machine Name		C Serial Number:			
D 1~ f1 f2					E C US
F	G	H Minimum AMP/Volt to Maximum AMP/Volt			
		I X	J ###%	K ###%	L ###%
M S	N U_0 = ###V	O I_2	P ###A	Q ###A	R ###A
		S U_2	T ###V	U ###V	V ###V
W 1-50/60Hz	X U_1 = ###		Y I_{1max} = ###A		Z I_{1eff} = ###A

a. Manufacturer.

b. Machine name.

c. Serial number.

d. Electrical phase line diagram.

e. Independent product safety certificates

f. Process diagram:

MIG (GMAW) Flux-Core (FCAW) Stick (SMAW) TIG (GTAW) Plasma Cutting (PAC)

g. Signifies the output current:

Direct Current (DC) Alternating Current (AC) Alternating & Direct Current (AC/DC)

h. Minimum output amperage/voltage to maximum output amperage/voltage

i. Duty cycle chart

j. Duty cycle rating #1

k. Duty cycle rating #2

l. Duty cycle rating #3

m. Identifies a welding power source suitable for welding in an environment with an increased risk of electric shock

n. $U_{(0)}$ indicates the open circuit voltage

o. $I_{(2)}$ indicates the output amperage the duty cycle above it represents

p. Output amperage of duty cycle rating #1

q. Output amperage of duty cycle rating #2

r. Output amperage of duty cycle rating #3

s. **$U_{(2)}$ indicates the output voltage that the duty cycle above it represents**

t. **Output voltage of duty cycle rating #1**

u. **Output voltage of duty cycle rating #2**

v. **Output voltage of duty cycle rating #3**

w. **Indicates input power phase and hertz requirements**

x. **$U_{(1)}$ indicates the input power voltage:** This indicates the input power voltage of the machine for the duty cycle chart shown. Multi-voltage machines will have both 120V and 240V duty cycle charts. This will indicate which chart is shown here.

y. **$I_{(max)}$ indicates the maximum amperage draw:** Metal working machines have a high amperage draw when initiating the arc. It is brief and will drop to the running amperage once the arc is initiated.

z. **$I_{(1eef)}$ indicates the running amperage:** This is the maximum running amperage draw of the machine while operating under normal conditions, after arc initiation and at the highest output settings.

Internal Thermal Protection

If you exceed the duty-cycle of the machine, the thermal protection system will engage and shut off all machine output. After cooling, the thermal protector will automatically reset and the welding or cutting functions can resume. This behavior is normal and automatic and does not require any user action. However, you should wait at least 10 minutes after the thermal protector engages before resuming welding or cutting. You must do this even if the thermal protector resets itself before the ten minutes is up or you may experience less than specified duty-cycle performance.

CAUTION: DO NOT REGULARLY EXCEED THE DUTY-CYCLE OR DAMAGE TO THE MACHINE CAN RESULT.

Welding and Cutting Preparation

An important factor in making a satisfactory weld or cut is preparation. This includes studying the process and equipment and practicing welding or cutting before attempting to complete a finished product. An organized, safe, ergonomic, comfortable and well-lit work area should be prepared for the operator. To make the work area safe, all combustible materials should be kept a safe distance away and a fire extinguisher and bucket of sand should be kept near the work area at all times.

To properly prepare for welding or cutting with your new machine, it is necessary to:

- Read the safety precautions at the front of this manual.
- Prepare an organized, well-lit work area with proper ventilation.
- Provide protection for the eyes and skin of the operator and bystanders.
- Attach the ground clamp to the bare metal to be welded or cut, ensuring good contact.
- Plug the machine into a suitable outlet.
- Completely open the gas cylinder valve. Adjust the gas pressure regulator to the correct flow rate. (Not applicable to stick “SMAW”, flux-core “FCAW” or cut processes.)
- Provide a source of clean, dry air or nitrogen. (Only applicable for Plasma Cutting).

EXPOSURE TO A WELDING OR CUTTING ARC IS EXTREMELY HARMFUL TO THE EYES AND SKIN. PROLONGED EXPOSURE TO A WELDING OR CUTTING ARC MAY CAUSE BLINDNESS AND BURNS. NEVER STRIKE AN ARC OR BEGIN WELDING UNLESS YOU ARE ADEQUATELY PROTECTED. WEAR FIRE-RESISTANT WELDING GLOVES, A LONG-SLEEVED SHIRT, CUFFLESS PANTS, HIGH-TOPPED SHOES AND A WELDING HELMET.

Ground Clamp Connection

Connect the GROUND CABLE CLAMP to the workpiece to be cut or welded, or to the metallic workbench.

Take following precautions:

- Ensure that the GROUND CLAMP is attached with a good connection to an area of the workpiece that is clean and free from any coatings such as paint, rust, oil/grease or scale.
- Make ground connections as close as possible to the work area to reduce EMI.
- When plasma cutting, do not make a ground connection on the piece which is to be removed.

Factors to Consider for Best Flux-Core Welding Results

Some experience is required to adjust and use a Flux-Core welder. In Flux-Core welding, two parameters are fundamental: the welding voltage and the wire feed speed. The resulting welding current is a result of these two settings but is more directly related to the wire feed speed.

- Set the voltage and wire feed speed to positions suitable for the thickness of the material to be welded (See "141 FC-i FCAW Setup Chart" below).

Welding current varies in relationship to wire feed speed. For low wire feed speed, welding current output will be low. Turning the wire feed speed control clockwise will result in increased wire feed speed and welding current. Welding voltage should be adjusted to match the wire feed speed/welding current. Progressively select higher voltage positions when increasing wire speed.

Increasing welding voltage leads to a longer arc (without substantially affecting the current). Conversely, a decreased welding voltage results in a shorter arc (the current again is not substantially changed). A change in wire diameter results in changed parameters. A larger diameter wire will draw a higher current than a smaller diameter wire at the same wire feed speed. If certain limits are exceeded, a satisfactory weld cannot be obtained. These limits are:

1. Feeding wire too fast (speed too high with regard to the welding voltage) results in pulsing within the gun. This is because the wire electrode dips into the puddle and cannot be melted off fast enough.
2. Setting welding voltage too high (too high with regard to the wire feed speed), will result in an excessive and unstable arc. Increase the voltage even higher and the contact tip will burn.
3. Excessive wire speed can be corrected through the arc voltage increase. The limit of this adjustment depends on the thickness of the material to be welded (a certain limit exceeded will result in burn through).

Place the gun on the joint you want to weld: the angle between the gun and the workpiece should be around 45°. The distance between the gun and the workpiece should be about 1/2" - 5/8". Lower your welding helmet and press the gun trigger to start the arc. When the arc has struck, move the nozzle slowly from left to right along the joint. Adjust the wire feed speed until the arc makes a "crisp" sound (experience will help you recognize the right sound).

Welding Wire Selection

Flux-Core
This welder can work with .030" – .035" (0,8mm – 0,9mm) diameter flux-cored wire (flux-cored wire welding, "FCAW").

Setup for Flux-Core Wire (FCAW) Welding

- Load the spool of wire inside the cabinet and feed it through the WIRE FEEDER into the gun (see the "Installing the Welding Wire" section of this manual).
- Switch the unit ON with the ON/OFF SWITCH.
- Ensure the ground clamp has a good connection to the workpiece and is connected on clean, bare metal (not rusty or painted).
- Set the welding parameters:
  1. Adjust arc voltage with the VOLTAGE ADJUSTMENT KNOB.
  2. Adjust wire feed speed with the WIRE FEED SPEED KNOB.
- Bring the gun close to the workpiece and press and hold the trigger to begin the weld.
- Release trigger to end weld.

141 FC-i FCAW SETUP CHART

MATERIAL	WIRE ø	MATERIAL THICKNESS															
		20 Gauge .036" (0,9mm)		18 Gauge .048" (1,2mm)		16 Gauge .063" (1,6mm)		14 Gauge .075" (1,9mm)		12 Gauge .105" (2,7mm)		1/8" (3,2mm)		3/16" (4,8mm)		1/4" (6,4mm)	
Regulation Knob		V		V		V		V		V		V		V		V	
Mild Steel	.030" (0,8 mm)	1-1.5	1-1.5	1.5-2.5	1.5-2.5	2.5-3.5	2.5-3.5	3-4	3-4	5-6	5-6	7-8	7-8	9-10	9-10	-	-
	.035" (0,9mm)	-	-	1-1.5	1-1.5	1.5-2.5	1.5-2.5	2.5-3.5	2.5-3.5	3-4	3-4	5-6	5-6	7-8	7-8	9-10	9-10

CANNOT WELD ALUMINUM

Maintenance & Servicing

General Maintenance

This machine has been engineered to need minimal service providing that a few very simple steps are taken to properly maintain it.

WARNING: ELECTRIC SHOCK CAN KILL! Be aware that the ON/OFF SWITCH, when OFF, does not remove power from all internal circuitry in the welder. To reduce the risk of electric shock, always unplug the welder from its AC power source and wait several minutes for electrical energy to discharge before removing the side panels

1. Always keep the cabinet cover closed unless changing the wire or the drive pressure.
2. Keep all consumables clean and replace them when necessary. See "Consumable Maintenance" (below) and "Troubleshooting" for detailed information.
3. Replace INPUT POWER CABLE, ground cable, ground clamp, welding torch or plasma torch if damaged or worn.
4. Avoid directing grinding particles towards the machine. These conductive particles can build up inside the machine and cause severe damage.
5. Periodically clean dust, dirt, grease, etc. from your machine. Every six months or as necessary, remove the cover from the machine and use compressed air to blow out any dust and dirt that may have accumulated inside the machine.
6. Check all cables periodically. They must be in good condition and not cracked.

Consumable & Machine Maintenance

IT IS VERY IMPORTANT TO MAINTAIN THE CONSUMABLES IN GOOD CONDITION TO AVOID THE NEED FOR PREMATURE REPLACEMENT OF THE GUN ASSEMBLY.

WARNING: DISCONNECT FROM THE POWER SOURCE WHEN CARRYING OUT THIS OPERATION.

MAINTAINING THE CONTACT TIP:

The purpose of the CONTACT TIP is to transfer welding current to the welding wire while allowing the wire to pass through it smoothly.

Always use a contact tip stamped with the same diameter as the wire it will be used with.

1. If the wire burns back into the tip, remove the tip from the gun and clean the hole running through it with an oxygen-acetylene torch tip cleaner or tip drill. If the burned-back wire cannot be removed, the tip must be replaced.
2. With extended use over time, this hole will become worn. Increased wear on the hole causes increased resistance in the transfer of welding current from the contact tip to the wire. This will result in less stable arc characteristics and difficult arc starting.

CAUTION: KEEP THE NOZZLE CLEAN!

During the welding process, spatter and slag will build up inside the nozzle and must be cleaned out periodically. Failure to clean and/or replace the nozzle in a timely fashion will cause damage to the front end of the gun assembly, which is not replaceable. Therefore, damage to this area may require the replacement of the entire gun assembly.

Failure to keep the nozzle adequately clean may result in the following problems:

A shorted nozzle results when spatter buildup bridges across the insulation in the nozzle, allowing welding current to flow through it as well as the contact tip. When shorted, a nozzle will steal welding current from the wire whenever it contacts the grounded workpiece. This causes erratic welds and reduced penetration. In addition, a shorted nozzle overheats the end of the gun, which can damage the front-end of the gun.

TESTING FOR A SHORTED NOZZLE

Arcing between the nozzle and the workpiece always means the nozzle is shorted, but this can be hard to detect through the lens of a welding helmet. The following testing method is another way to determine if a nozzle is shorted.

With the welder unplugged from the AC power source, touch the probes of an ohmmeter or continuity tester to the end of the contact tip and the outside of the nozzle. If there is any continuity at all, the nozzle is shorted. Clean or replace it as needed.

MAINTAINING THE DRIVE-ROLL

The wire-feed drive roller will eventually wear during normal use. With the correct pressure, the idler roller must feed the wire without slipping. If the grooves in the wire-feed drive roller are worn deep enough so that the idler roller and the wire-feed drive roller make contact when the wire is in place between them, the wire-feed drive roller must be replaced.

Troubleshooting

PROBLEM	POSSIBLE CAUSE	POSSIBLE SOLUTION
The wire feeds but there is no arc.	A bad ground or loose ground connection.	Check the connection of the ground cable to the ground clamp. Tighten the cable connection to the ground clamp if needed.
		Ensure that the connection between the ground clamp and the workpiece is good and is on clean, bare (not painted or rusted) metal.
The machine arcs, but does not feed the wire.	There is no pressure on the drive roller; the pressure on the drive roller is insufficient or excessive.	Adjust the drive pressure. See the "Installing The Welding Wire" section of this manual.
	The wire spool is empty.	Check if the wire is in place and replace it if necessary.
The feed motor operates, but the wire will not feed.	The wire feed drive roller pressure is incorrect.	Adjust the drive pressure. See the "Installing The Welding Wire" section of this manual.
	There is a burr on the end of the wire.	Re-cut the wire so it is square with no burr.
	The liner is blocked or damaged.	Clear the liner.
The wire pushes the gun back from the workpiece.	The gun is being held too far from the workpiece.	Hold the gun at the right distance.
The fan operates normally (it can be heard) but there is no arc or wire feed.	The gun trigger is not being pulled or is not making contact.	Pull the trigger while making contact with the workpiece. The machine will not arc unless the trigger is pulled. Depress the trigger ALL THE WAY until the trigger stops moving into the gun.
	The thermal protector was engaged because the duty-cycle was exceeded.	Observe and maintain the proper duty-cycle while you allow the welder to cool for at least 10 minutes with the machine ON.
	Insufficient airflow caused the machine to overheat before reaching the duty cycle.	Check for obstructions blocking the airflow and ensure there are 12" of clearance between any obstacles and the vents on all sides of the machine.
The fan does NOT operate normally (it cannot be heard) and there is no arc or wire feed.	There is no voltage or the incorrect voltage is being supplied to the welder.	Ensure the machine is plugged in.
		Check the voltage of your outlet. If it is 10% more or less than optimal, call a qualified electrician.
	The ON/OFF SWITCH is in the OFF position.	Turn the ON/OFF SWITCH to the ON position.
	The circuit breaker has been tripped.	Ensure the circuit breaker has been reset.
The wire is "bird-nesting" at the drive roller or jamming.	Too much pressure on the drive roller.	Adjust the drive pressure. See the "Installing The Welding Wire" section of this manual.
	The contact tip is clogged or damaged.	Replace the contact tip.
The wire burns back to the contact tip.	The wire feed speed is set too low for the voltage setting being used.	Increase the wire feed speed (turn the RIGHT KNOB clockwise).
	The stick-out is too short.	Increase the stick-out (the amount the wire extends past the contact tip).
	The contact tip is the wrong size.	Use the correct size contact tip.
	The contact tip is clogged or damaged.	Replace the contact tip.

PROBLEM	POSSIBLE CAUSE	POSSIBLE SOLUTION
The gun nozzle arcs to the work surface.	There is slag buildup inside the nozzle or the nozzle is clogged.	Clean or replace the nozzle as needed.
Low output or non-penetrating weld.	The weld parameters are too low.	Adjust the welding parameters
	The extension cord is too long or improper.	Use a proper extension cord. See the "Extension Cords" section of this manual.
	The wire is the wrong type or size.	See the "Welding Wire Selection" of this manual.
	The ground connection is poor.	Reposition the clamp and check the cable to the clamp connection.
	The contact tip is the wrong size or worn.	Use the contact tip size that corresponds to the size of the wire you are using.
		Replace the contact tip if it is worn.
	The input power is too low.	Have a qualified electrician verify the voltage at your outlet.
	The stick-out is too long.	Decrease the stick-out (the amount the wire extends past the contact tip).
Poor quality welds.	The settings being used are incorrect.	Check the welding parameters.
	The workpiece is rusty, painted, oily or greasy.	Ensure the workpiece is clean and dry.
	The wire is rusty or dirty.	Ensure the wire is clean and dry.
	The ground connection is poor.	Check the ground clamp/workpiece connection and all other connections to the machine.
The weld deposit is "stringy" and incomplete.	The gun was moved over the workpiece too quickly.	Move the gun more slowly.
The weld deposit is too thick.	The gun was moved over the workpiece too slowly.	Move the gun more quickly.
	The welding voltage/amperage is too low.	Increase the welding voltage/amperage.
The GREEN LED is ON and the YELLOW LED is ON. The fan is operating properly but there is no output.	The thermal protector was engaged because the duty-cycle was exceeded.	Observe and maintain the proper duty-cycle while you allow the machine to cool for at least 10 minutes with the machine ON. The fault state will clear after the machine has cooled.
	Insufficient air flow caused the machine to overheat before reaching the duty cycle.	Check for obstructions blocking the airflow and ensure there are 12" of clearance between any obstacles and the vents on all sides of the machine.
The GREEN LED is ON and the YELLOW LED is FLASHING. The fan is operating properly but there is no output.	The torch triggered before the machine was powered on.	The MIG gun, TIG or plasma torch triggered or turned on before the machine was powered on. Simply release the gun trigger and the machine will reset within five seconds.

PROBLEM	POSSIBLE CAUSE	POSSIBLE SOLUTION
Frequent circuit breaker trips.	The machine is drawing too much amperage because the electrode/weld wire is too large or the output amperage setting is too high.	Use a smaller electrode/weld wire or turn the output settings down.
	The machine is not the only piece of electrical equipment on the circuit.	Ensure the machine is on a dedicated circuit or is the only item plugged into a circuit.
	The circuit breaker is incorrect/insufficient for use with this machine.	Verify the circuit breaker is the correct one. See the "Machine Specifications" section of this manual.
The ground clamp or ground cable get hot.	The ground clamp is not properly placed or the ground clamp cable is not properly connected to the machine.	Check the connection of the ground clamp and gun to the machine.
		Check the connection of the ground cable to the ground clamp. Tighten the cable connection to the ground clamp if needed.
		Ensure the connection between the ground clamp and the workpiece is good and on clean, bare (not painted or rusted) metal.
		Ensure the cable is not damaged.
Difficult arc start.	The output setting is too low.	Increase the output setting.
	Ensure the base metal is clean.	Properly clean the base metal.
	Ensure the electrode and/or torch is not damaged.	Replace them as needed.

Machine Parts Diagram & Accessories

NO.	PART NUMBER	ITEM DESCRIPTION
1	262	141 FC-i
2	78040	15-20A Plug Adapter
3	-	Nylon Carry Strap
4	-	6′ Ground Clamp with Lead
5	-	Integrated 8′ MIG Gun
6	60171	Contact Tip .030″ x1
7	60172	Contact Tip .035″ x1
8	78007	Installed .030″/.035″ K Drive-Roll

MIG Gun Consumables List

NO.	PART NUMBER	ITEM DESCRIPTION	NO.	PART NUMBER	ITEM DESCRIPTION
1	60171	Tip (Tweco® 11-30)	2	85793	Diffuser
	60172	Tip (Tweco® 11-35)	3	85332	Flux-Core Welder Nozzle

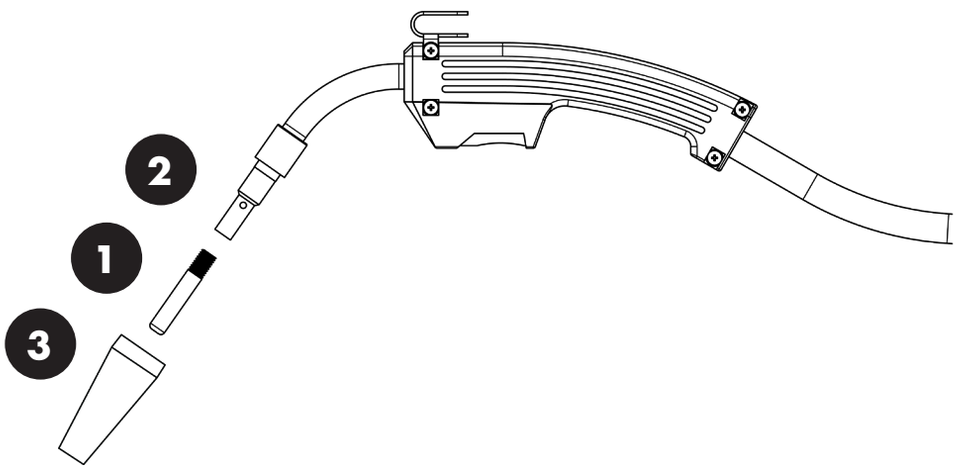

User Notes

User Notes

Forney Industries, Inc.
2057 Vermont Drive
Fort Collins, CO 80525
+1-800-521-6038
www.forneyind.com