LOS FLEXI

CRAFTING YOUR HOME STORY



C18 One-Piece Toilet

INSTALLATION & CARE GUIDE

cs@losflexi.com www.losflexi.com +1 (662) 502-5099

PRIOR TO INSTALLATION:

GET READY TO TRANSFORM YOUR BATHROOM!
INSTALLING YOUR TOILET

Hello, DIY Champion!
Before you embark on the exciting journey of installing your sleek toilet, let's ensure you're fully equipped to tackle this task with finesse.
We're here to guide you through this process with clear and user-friendly instructions, making it as easy as a warm handshake.

Before You Dive In:

- Take a moment to peruse these instructions, ensuring you have the right tools and materials on hand. This step is your secret weapon to success.
- Give your new toilet a quick once-over to make sure it's in perfect condition after its voyage to your home. We want it to shine as brilliantly as it's designed to.
- Show your commitment to following the plumbing and construction regulations in your area. We're all about keeping things on the up-and-up.
- Bid farewell to your old toilet. Trust us; this upgrade will redefine your bathroom experience!

Here's a valuable tip: Ensure that your water supply pressure meets or exceeds a minimum of 35 PSI (2.5 kg/cm^2). This is the power your new toilet needs to deliver peak performance. No pressure, no performance, right?

- Give that mounting surface a little love – cleanliness and levelness are the keys to a comfortable seat for your toilet.

You're all set, bathroom virtuoso! Get ready to transform your bathroom into the talk of the town. Remember, we're just a message away if you require any assistance. Now, go ahead and install that toilet like the superstar you are!

FOR HIGH-RESOLUTION DIGITAL MANUAL

TOOLS AND MATERIALS REQUIRED (Not Supplied)

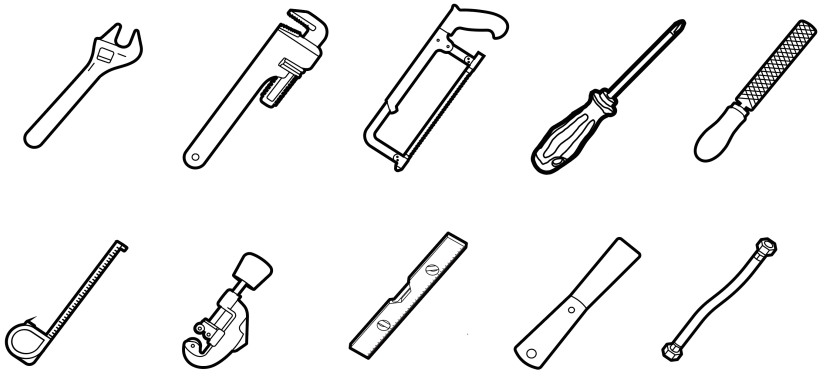

1. 10" (254mm) adjustable wrench
2. 12" (305mm) pipe wrench
3. Hacksaw
4. Flathead Screwdriver
5. Metal file (file cut)
6. Tape measure
7. Tubing cutter
8. Level
9. Putty knife
10. Water supply line

PACKAGE INCLUDED:

- One-Piece Toilet
- Toilet Seat
- Installation Kit

Quick heads-up: If your current toilet doesn't sport a supply shut-off valve beneath the tank, make sure to pop one in before you dive into setting up your shiny new throne.

START INSTALLATION

1. Remove Old Toilet

- Turn off the water supply.
- Flush the toilet to empty the tank. Remove any water left in the tank or bowl.
- Disconnect the supply line from the tank.
- Remove decorative caps. Unscrew nuts that attach the toilet to the floor. Remove toilet.
- Make sure the water supply valve is shut off before installation.
- Remove old toilet bolts from toilet flange. Clean any old wax, putty, etc. from base area.

2. Install or relocate the water supply and outlet as necessary to conform to the rough-in dimensions of your new toilet. Ensure that the shut-off valve is greater than 7 1/2" from the center of the drain to the center of the shut-off valve on either side.

NOTE: This model is available in both 10" and 12" rough-in versions. The measurement is taken from the finished wall to the center of the drain (ensure no less than the specified dimension). Please note that baseboard thickness may reduce the actual rough-in space available.

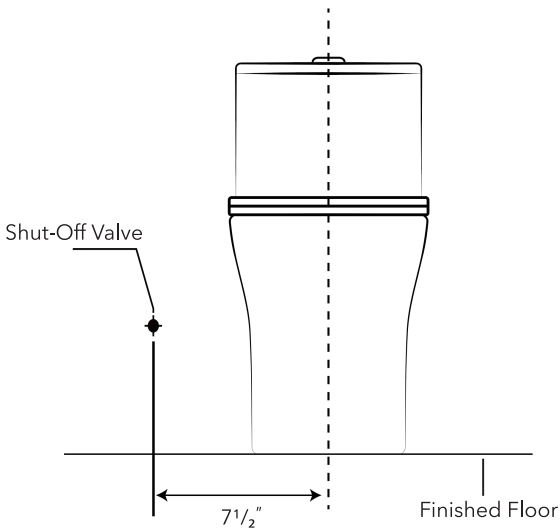

3. If replacing a toilet, scrape off and remove all wax residue with a cleaner. Toilet flange must be clean and dry.

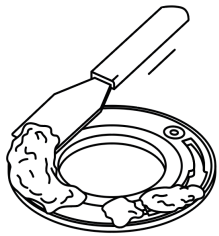

4. Insert the new T-bolts and plastic washers. (Flange is not included.)

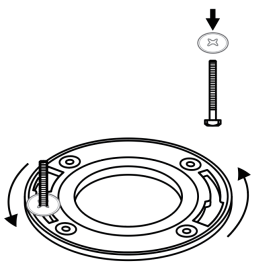

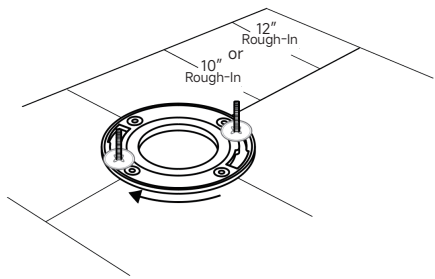

5. Connect the water supply line to the toilet. A 7/8″ to 1/2″ fill valve adapter is included for optional use.

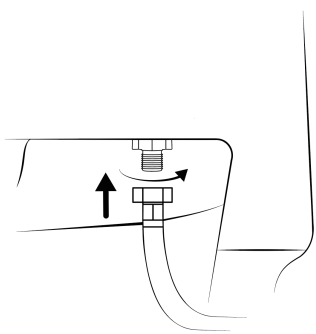

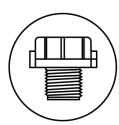

Adapter
(Fits 1/2″ toilet water supply line)

6. Place the wax seal

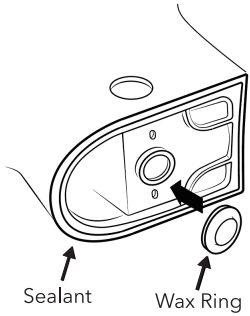

7. Apply weight evenly.

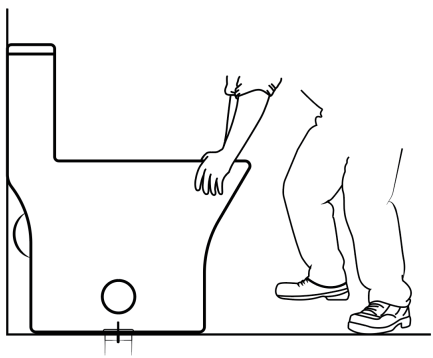

8. Install floor mounting kit as shown below. DO NOT OVERTIGHTEN!

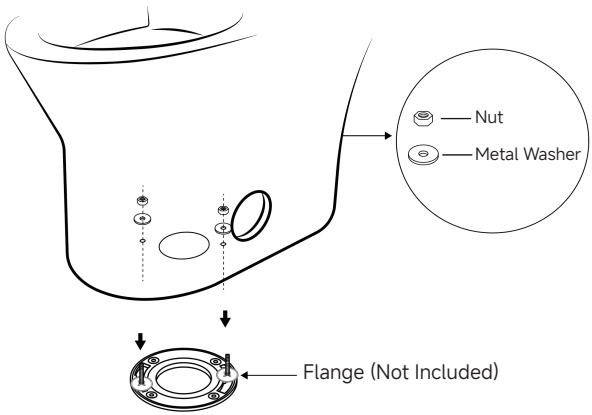

9. Install the decorative side cover.



Removal Tip: To remove the cap, insert the provided screw from the inside and push the cap outward.

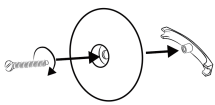

① Install the components in the order shown in the illustrations.

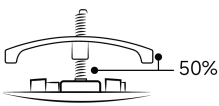

Assembly Tip: Thread the plastic anchor halfway onto the screw before insertion to ensure proper anchoring.

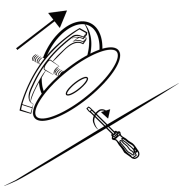

② Insert the pre-assembled unit into the side access hole. Tighten the screw until secure.

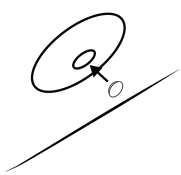

③ Snap the decorative cap into place to conceal the screw head.

10. Tank Button Assembly

• Screw the two rods into the push button.
• Attach the button to the tank lid and tighten the large white nut from the back.
• Place the tank lid onto the toilet and test the flush buttons, adjusting the rods if necessary.

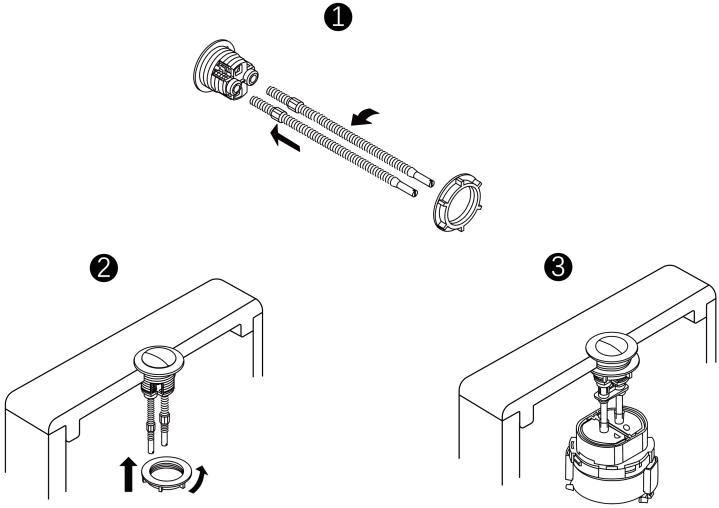

11. Connect the water supply line to the water valve. Do not overtighten.

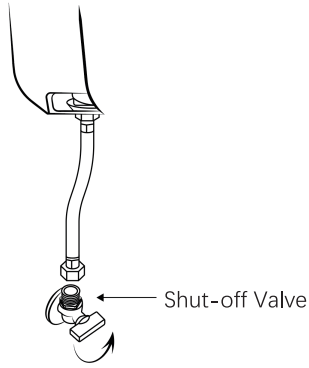

12. Install the seat per the seat instructions provided. Use the supplied seat bolts and hinges. After installation, flush several times and check for leaks.

❶

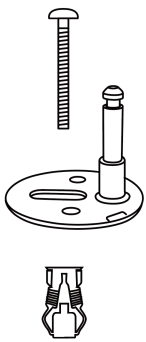

Hinge Assembly

❷

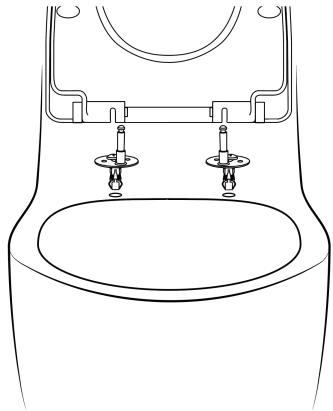

Install the hinges and seat
Align the seat and bowl, then remove it

❸

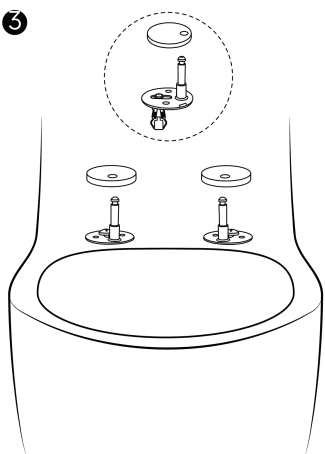

Place the cover caps onto the hinges

❹

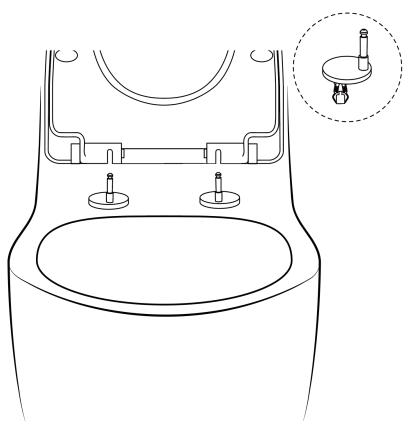

Reattach the seat onto the bowl

PRODUCT CLEANING & CARE

- Do not use in-tank cleaners in your toilet. Products containing chlorine can seriously damage fittings in the tank. This can cause leakage and damage.
- Do not use cement while installing toilet.
- Wipe surfaces clean and rinse completely with water immediately after applying cleaner. Rinse and dry any overspray that lands on nearby surfaces. Do not allow cleaners to soak on surfaces.
- Use soft, dampened sponge or cloth. Never use abrasive materials such as hard-bristle brushes or scouring pads to clean surfaces. Use of any abrasive materials may damage the porcelain glaze.
- If you live in a hard water area, make certain that the rim-jet holes underneath the rim of the toilet bowl are kept clean to ensure proper flushing.

TROUBLESHOOTING GUIDE

PROBLEM & RECOMMENDED ACTION

Poor flush
- Adjust the tank water level to match the waterline.
- Fully open the water supply shut-off valve.
- Clear obstructions from the trapway, jet or rim holes.

No flush
- Clean or replace the flapper if it is worn, dirty, or misaligned with the flush valve opening.
- Clean area around the flush valve opening to allow flapper to seal.
- Adjust the tank water level if it is too high.
- Replace the fill valve if the valve float sinks.

Tank takes excessive time to fill
- Fully open the water supply shut-off valve.
- Check supply line for a kink and remove if necessary.
- Clean valve inlet, valve head, or supply line. Flush lines to clear any debris.

There is excessive noise when the tank is filling
- Partially close the water supply shut-off valve if the water pressure to the toilet is too high. Check the toilet performance following any such adjustment.
- Remove dirt or obstructions from the fill valve head. Flush the lines to clear any debris.

IMPORTANT CONSUMER INFORMATION

Consumer Responsibilities

- If you live in a hard water area, make certain that the holes in the toilet rim are kept clean to ensure proper bowl flushing.
- Toilet bowl cleaners should be used at least once a week.
- Use a long-handled brush to clean the rim holes and to clean as far into the trap as possible to prevent mineral deposits from forming.
- Most toilet bowl cleaners are not harmful to the vitreous china surface of the toilet bowl. Please follow the bowl cleaning instructions carefully.

WARNING

- DO NOT USE ABRASIVE CLEANERS OR SOLVENTS.
- DO NOT USE ANY CEMENT WHILE INSTALLING THE TOILET
- Expansion due to heat may damage the base of the toilet. Los Flexi will not be responsible for any heat damage.
- Do not throw material into the toilet can easily clog such as newspaper, paper towels, or sanitary napkins.
- Take care not to strike vitreous china with force to prevent damage and leaks.
- Do not use the toilet with water below 0°C (32.0°F).

LIMITED WARRANTY COVERAGE

TWO YEAR LIMITED WARRANTY

Los Flexi products are crafted with superior materials and impeccable workmanship, offering our customers reliable and long-lasting products. If defects in materials or craftsmanship are detected under standard use within the first two years of installation, Los Flexi will either supply replacement parts at no charge or, if deemed necessary, replace the product or its parts.

This warranty is exclusive to the original purchaser, and proof of purchase is mandatory for any claim.

This Warranty Will Be Voided If:

- The product's installation did not follow our recommendations.
- The product was relocated from its initial installation site.
- The product underwent any modifications from its original condition.
- The product suffered from neglect, misuse, chemical overuse, accidents, or any other damages.

Los Flexi does not imply that our products adhere to local building or plumbing codes. Consumers must ascertain local code compliance before and during installation. This warranty is strictly for the original purchaser and first consumer.

Los Flexi won't be held responsible for any consequential damages linked to the product's installation, replacement, return, or usage. This includes, but is not limited to, freight charges, labor, downtime, home damages, and other associated costs (e.g., professional services, investigations, audits, legal fees).This Los Flexi warranty clearly delineates our liability. Items not specified in this warranty fall outside Los Flexi's responsibility. In states with variations concerning implied warranties, our compliance is ensured.

For any queries or concerns, feel free to reach out to us at

Email: cs@losflexi.com
Voicemail: (+1) 662-502-5099
Site: www.losflexi.com