INSTALLATION INSTRUCTIONS

Item#2335-66A (Pendant For Cord Pendant)

READ AND SAVE THESE INSTRUCTIONS

WARNING! SHUT POWER OFF AT FUSE OR CIRCUIT BREAKER.

AVERTISSEMENT! COUPER LE COURANT AU NIVEAU DES FUSIBLES OU DU DISJONCTEUR.

PREPARATION (Fig. 1)

1. Shut off power at the fuse box or circuit breaker box and remove the old fixture including the mounting hardware.
2. Carefully unpack your new fixture and lay out all the parts in a clean area. Take care not to misplace any small parts necessary for installation.

ASSEMBLING THE FIXTURE (Fig.1)

3. Place cap (J) on all thread on top of socket, loosening set screw (F1), and thread coupling on all thread and tighten set screw (F1) to ensure wire not pulling out.
4. Determine the desired hanging height by loosening set screw (F). Once desired height is achieved, tighten set screw (F) and cut excess wire above canopy (C). Make sure to leave at least 8" of wire above.
5. Attach mounting plate (A) to junction box (Not included) with screws (B).

CONNECTING THE WIRES (Fig. 2)

6. Connect the electrical wires as shown in Fig 2, making sure that all wire connectors are secured. If your junction box has a ground wire (green or bare copper), connect the fixtures ground wire to it. Otherwise, connect the fixture's ground wire directly to the mounting plate (A) using the green screw (E) provided.
7. Tuck wire connectors neatly into junction box.

COMPLETING THE INSTALLATION (Fig. 1)

8. Place canopy (C) over mounting plate (A) and secure with screws (D).
9. Install (1) one medium base bulb (I) up to 60 watts each or CFL or LED equivalent (not included) in accordance with the fixture specification—**DO NOT EXCEED THE MAXIMUM WATTAGE RATING! (NE PAS DEPASSER LA PUISSANCE NOMINALE MAXIMALE!)**

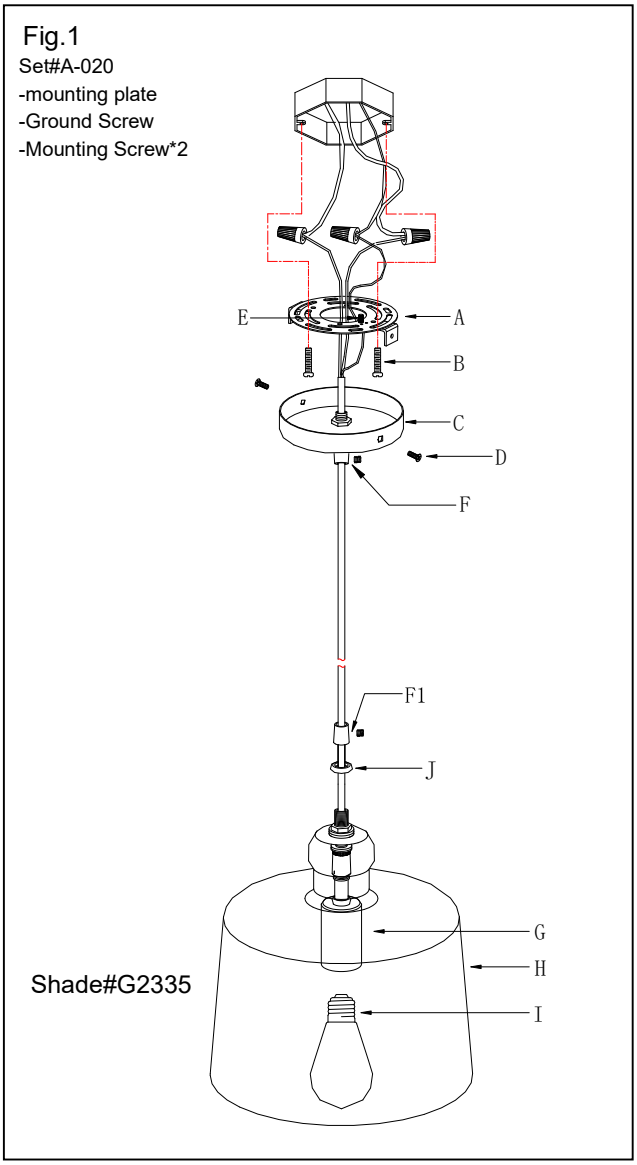

Your installation is now complete. Return power to the junction box and test the fixture.

Note: Illustration (Fig. 1) on this manual is for installation purposes only. It may or may not be identical to the fixture purchased.

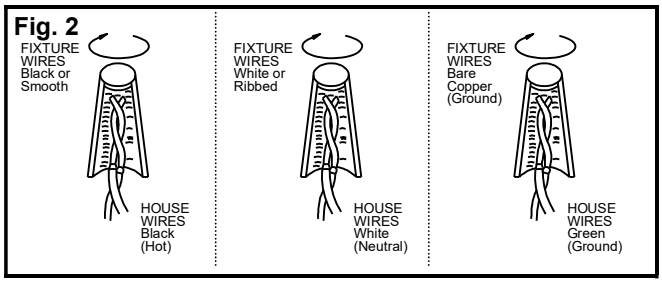

Intertek

american lighting association

Fig.3

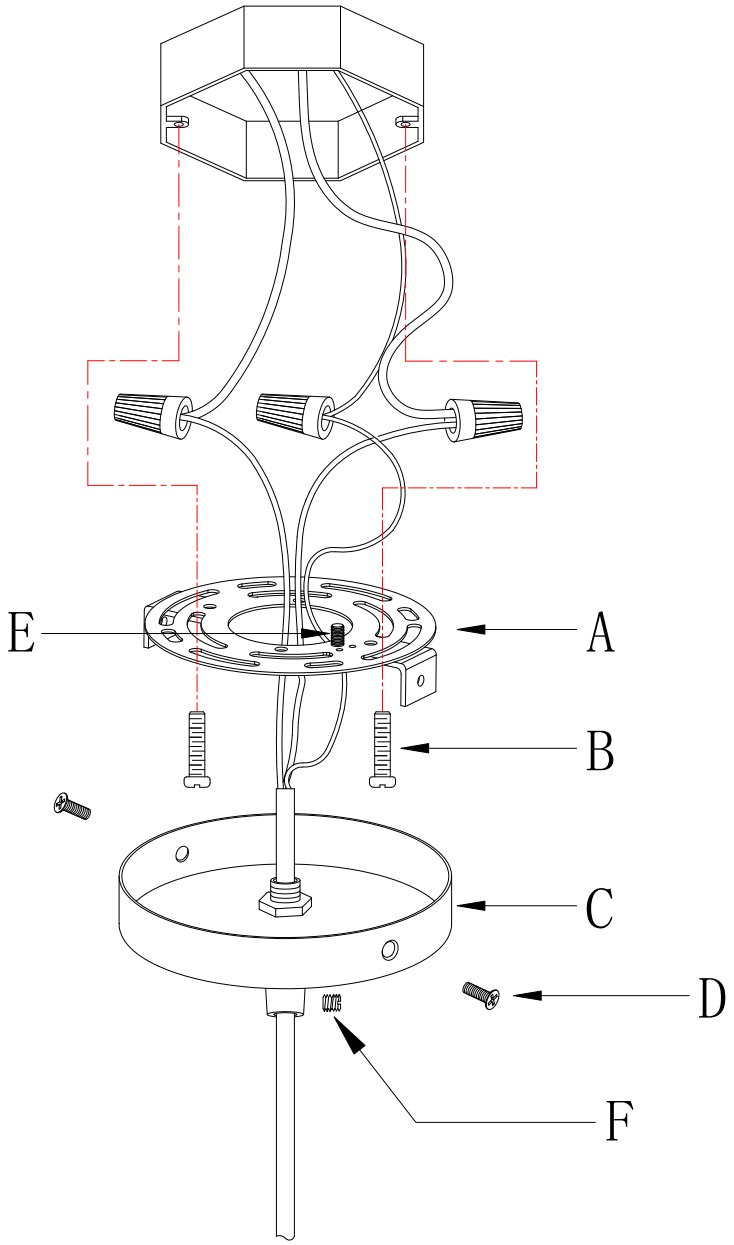

a. Hardware Bag:
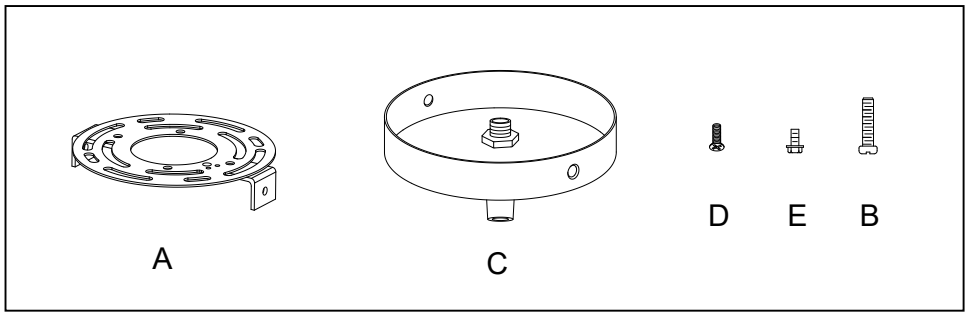
A. Mounting plate*1
B. Outlet box Screw*2
C. Canopy *1
D. Screw*2
E. Ground screw*1