Pitch® | K-T49990-4G

Rite-Temp® shower trim kit with push-button diverter, 1.75 gpm

Features

- Faceplate with handle and push-button diverter
- A single handle controls both on/off activation and temperature setting
- Pressure-balancing diaphragm technology maintains outlet temperature within +/-3°F during water pressure fluctuations
- Single-function 1.75 gpm (6.6 lpm) showerhead
- 1.75 gpm (6.6 lpm) maximum flow rate at 60 psi (4.14 bar)
- Box includes: Showerhead, faceplate with lever handle and diverter, shower arm with flange
- Coordinates with products in the Hint® collection



Sustainability

Available Colors/Finishes

Color tiles intended for reference only.

	CP	Polished Chrome
	BN	Vibrant Brushed Nickel
	BL	Matte Black
	2MB	Vibrant Brushed Moderne Brass

1-800-4KOHLER (1-800-456-4537)
Kohler Co. reserves the right to make revisions without notice to product specifications.
For the most current specification sheet, go to www.kohler.com USA or www.kohler.ca Canada.
3-27-2026 18:15 - US-CA

Codes/Standards

ASME A112.18.1/CSA B125.1
DOE - Energy Policy Act 1992
EPA WaterSense®
California Energy Commission (CEC)

Technical Information

All product dimensions are nominal.

Handle

Handle Style/ Type:	Lever

Flow Rate

Shower/Rainhead Rated Maximum Flow:	1.75 gpm (6.6 l/min)

Valves

Included Valves:	Diverter, Pressure Balance

Material

- Premium material construction for durability and reliability
- KOHLER finishes resist corrosion and tarnishing

Recommended Products/Accessories

K-23723 Faucet cleaner

Warranty

See website for detailed warranty information.

KOHLER® Faucet Lifetime Limited Warranty

1-800-4KOHLER (1-800-456-4537)
Kohler Co. reserves the right to make revisions without notice to product specifications.
For the most current specification sheet, go to www.kohler.com USA or www.kohler.ca Canada.
3-27-2026 18:15 - US-CA

THE BOLD LOOK OF KOHLER.

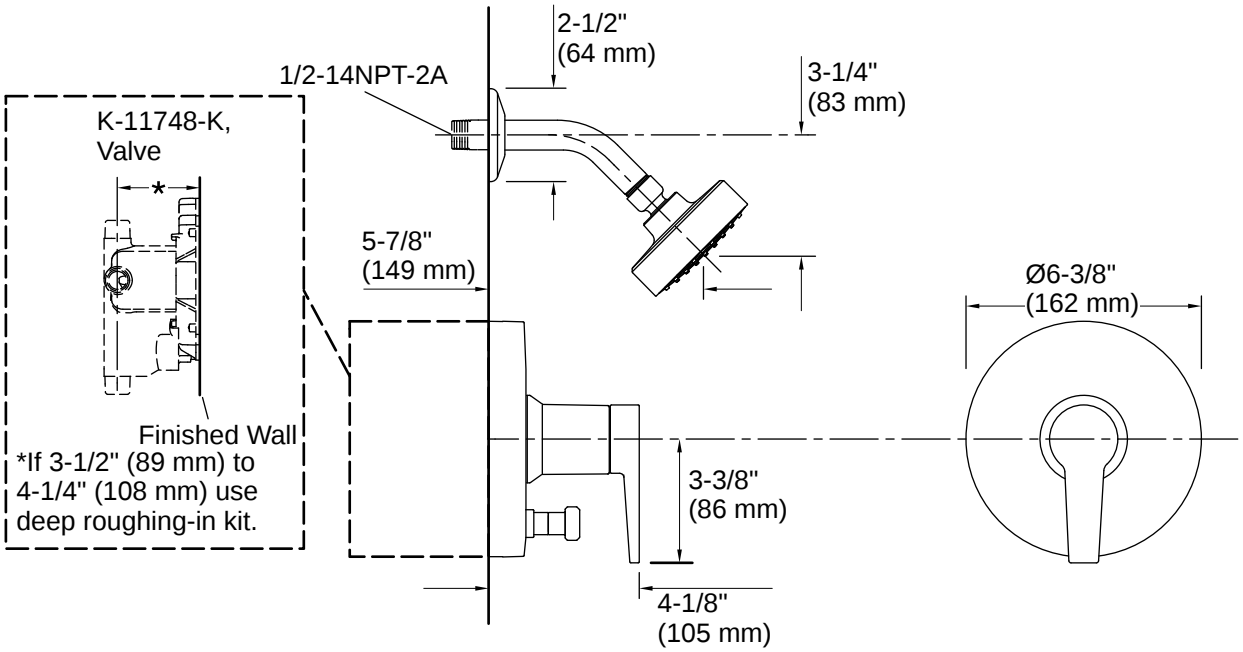

Installation

- Wall-mount
- Trim only; requires K-11748-K or K-11748-KS Rite-Temp pressure-balancing valve (sold separately)

Installation Notes

Install this product according to the installation instructions.

Avoid cross-flow conditions. Do not install a shut-off device on either valve outlet.

1-800-4KOHLER (1-800-456-4537)
Kohler Co. reserves the right to make revisions without notice to product specifications.
For the most current specification sheet, go to www.kohler.com USA or www.kohler.ca Canada.
3-27-2026 18:15 - US-CA

THE BOLD LOOK OF KOHLER.