Installation Instructions for 20-Minute Fire Rated Wood Edge Steel and Fiberglass Doors (JII-90000)

20-Minute Wood Jamb - Installation Instructions

Opening

a. Opening for door frame is to be prepared with nominal 2 x 4 buck up both jambs and across header. A wood stud partition requires double studs and header for backing the frame.

b. Maximum 1/8" clearance between the frame and door slab is allowed.

c. Maximum spacing between door jambs and opening framing (header and jack studs) shall be 1/2" or less.

Hardware

d. Minimum 20-minute rated lockset, minimum 1/2" throw.

e. Steel butt hinges, 4" x 4" x 0.097" (up to 3' 0" x 7' 0" opening), or follow NFPA 80.

Fastening Instructions

f. Side jamb is to be securely fastened to head jamb.

g. Jambs to be fastened with 2 1/2" fasteners (8d or 12 gauge finish nail), in pairs 16" on centers to stud and header.

h. Hinges are to be fastened through jamb into stud with screws provided by hinge manufacturer. Two screws in each hinge, to be minimum of 2" long, must penetrate through the hinge jamb and into the stud by 3/4" minimum. The remaining hinge screws will be used to mount hinge to the side jamb.

i. Latch strike plate is to be attached to jamb with two 2" long screws penetrating through the latch jamb into the stud.

j. Shims are required at each hinge elevation on both jambs 16" on center at header. Where gaps of 1/4" to 1/2" are present, fill gap with fiberglass insulation packing. No gaps over 1/2" allowed.

k. Casing nailed to stud and door jambs with 6d (13 gauge) finish nails 16" on center and within 4" of each end of the casing.

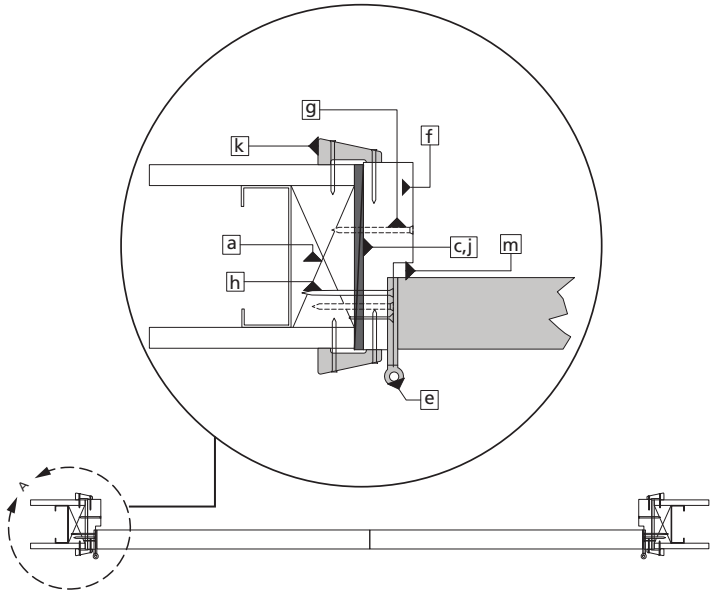

General

l. All installations must be according to NFPA 80 and this installation instruction.

m. If gasketing/edge seal is not provided by the manufacturer and local codes require that a labeled gasket/edge seal system be used, a listed fire rated gasket/edge seal must be installed. Gasket/edge seal must be listed for use with a wood frame and type of door being installed.

©2017 JELD-WEN, inc.; This publication and its contents are owned by JELD-WEN, inc. and are protected under the U.S. Copyright Act and other intellectual property laws. All trademarks, service marks, logos and the like (whether registered or unregistered) are owned or controlled by JELD-WEN, inc. or others. Unauthorized use or duplication of JELD-WEN intellectual property is prohibited.
JELD-WEN reserves the right to change product specifications without notice. Please check our website, **jeld-wen.com**, for current information.