

Ceiling Fan

Installation Instruction

SAFETY INFORMATION

Please read all safety information and instructions before installing the ceiling fan and save this manual for future reference.

SAFETY INFORMATION	01
PRE-INSTALLATION	02
INSTALLATION INSTRUCTION	04
OPERATION INSTRUCTION	09
SPECIFICATIONS	10
TROUBLESHOOTING	10

SAFETY INFORMATION

WARNING

- Before connecting the power supply, make sure that the power supply used matches the specifications of the ceiling fan.
- All wiring must comply with national and local electrical codes ANSI/NFPA70. If you are not familiar with wiring, please use a qualified electrician.
- To reduce the risk of fire or electric shock, turn off the power to the fuse box or circuit breaker before installing the fan.
- To reduce the risk of personal injury, attach the fan directly to the building's support structure and ensure that it can accept at least 35 pounds (15.9 kg).
- Make sure that the installation location allows the fan blades to rotate without obstacles.

Installation Location

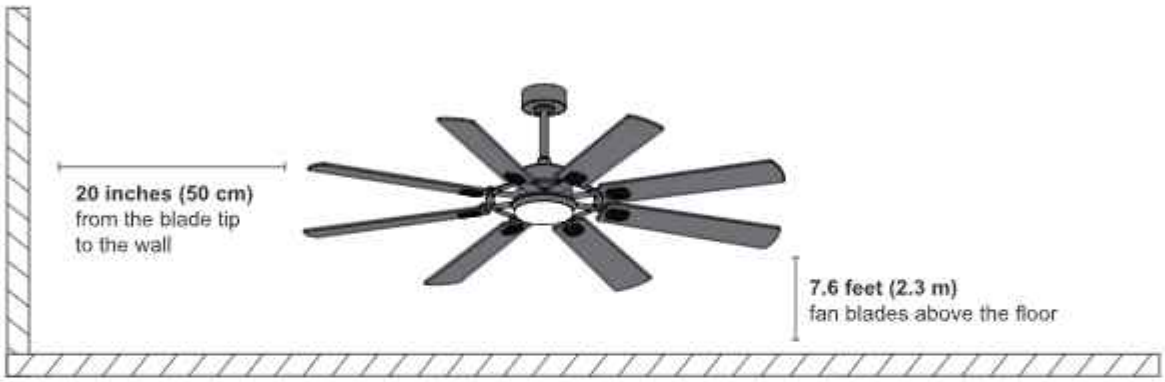

WARNING

- Do not install the fan with wet hands.
- Do not insert foreign objects between the rotating fan blades.
- Do not bend the fan blades when installing or cleaning the fan.
- Do not disassemble or modify this product or use non-original parts without permission.
- Keep children away from your working area.
- Properly dispose of the fan's packaging material.
- Make sure the ceiling fan is firmly secure to the ceiling. Double check all connections before you restore power.
- Turn off the fan and wait for the blades to stop completely before performing any maintenance or cleaning.

PRE-INSTALLATION

Tools Required (Not Included)


Power Drill

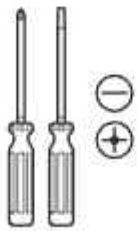
Screwdriver


Step Ladder


Wire Stripper

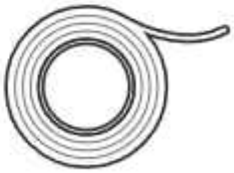
Electrical Tape

Parts List



Mounting Bracket X 1

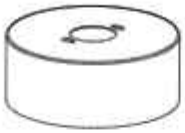

Canopy X 1



LED & Light Kit Pan X 1

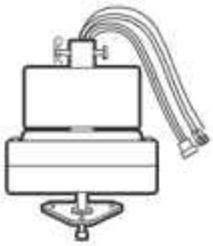

Fan Motor Assembly X 1



Coupling Cover X 1

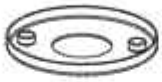

Canopy Cover X 1



Light shade X 1

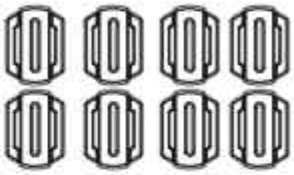

Decorative Cover X8



Blade Holder Screw X26



Blade Screw X26



Remote Control Bracket X 1



Remote Control X 1



Downrod X 2

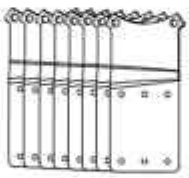

Blade holder X 8

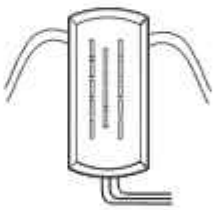

Receiver X 1



Aircraft Cap X 2

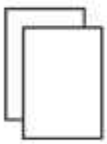

Balance Kit X 2

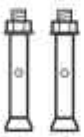

Expansion Bolt X 2

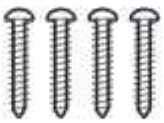

Self-tapping Screw X 4



Remote Bracket Screw X 2



Fan blade disk X 4



15X6 Decorative Nut X18

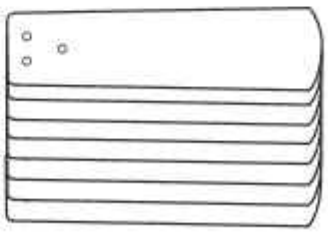

Fan Blade X6

INSTALLATION INSTRUCTION

Step 1: Mounting Bracket Installation

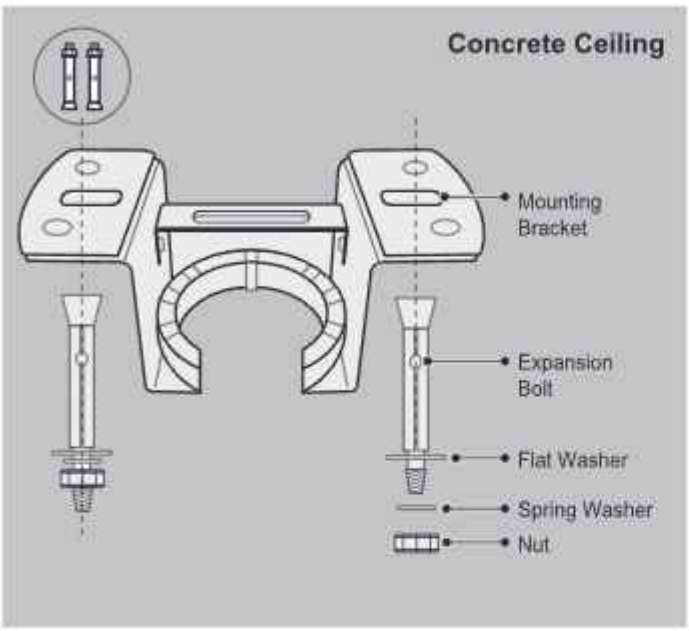

1. Drill holes with electric drill (φ8 mm).
2. Use expansion screws to fix the mounting bracket to the ceiling.

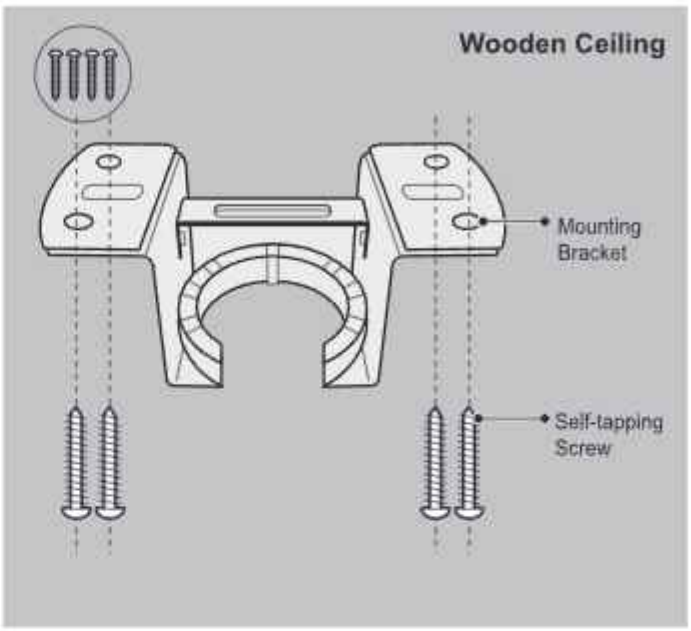

Fasten the mounting bracket to the ceiling with self-tapping screws.

Step 2: Fan Blade Installation

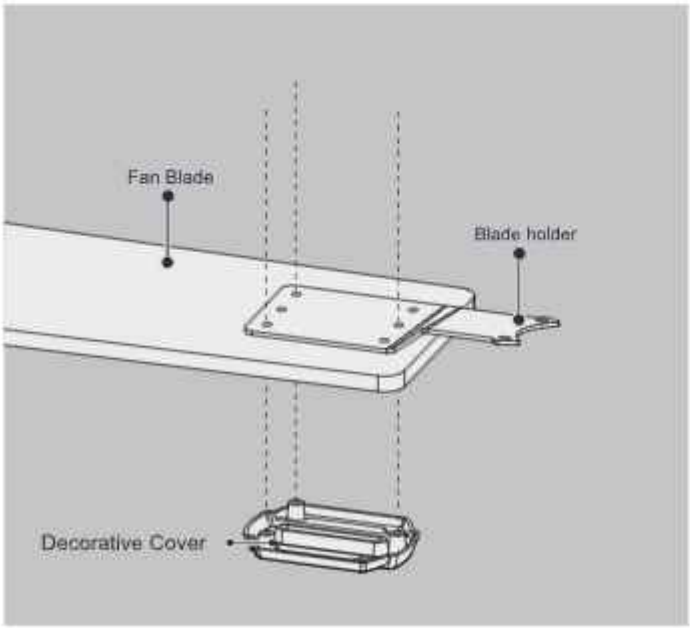

❶ Install the decorative cover in the screw hole at the bottom of the fan blade.

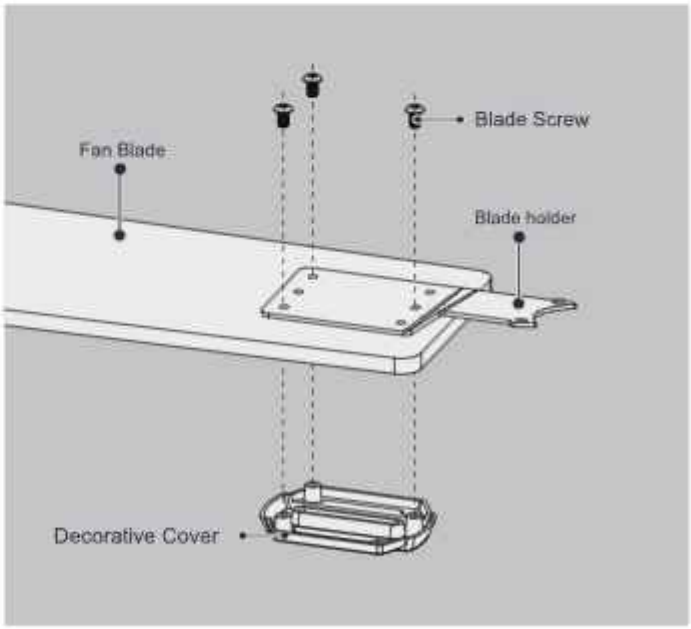

❷ Align the blade holder with screw holes in front of the fan blades and tighten the screws.

Note:

- Install the fan fork label face up.
- Fan blades need to be aligned with the "center" of the screw hole set.

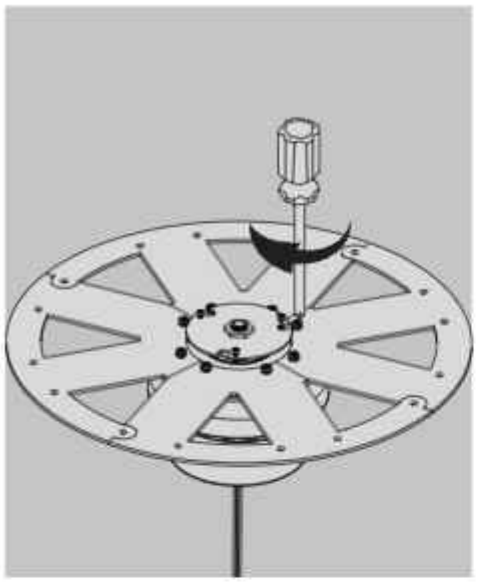

❸ Secure the fan blade disc to the motor with screws.

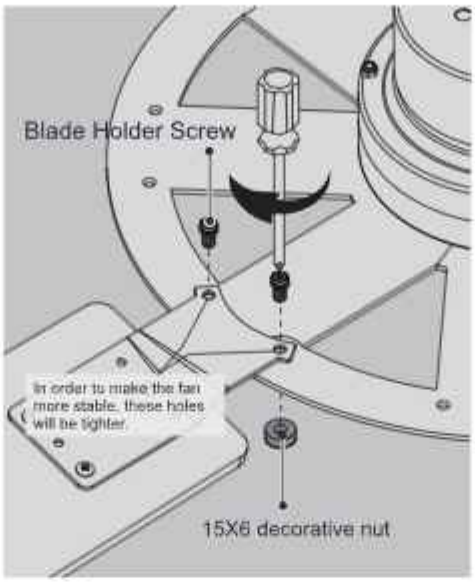

❹ Secure the assembled fan blades to the fan blade disc with screws, a total of 8 sets.

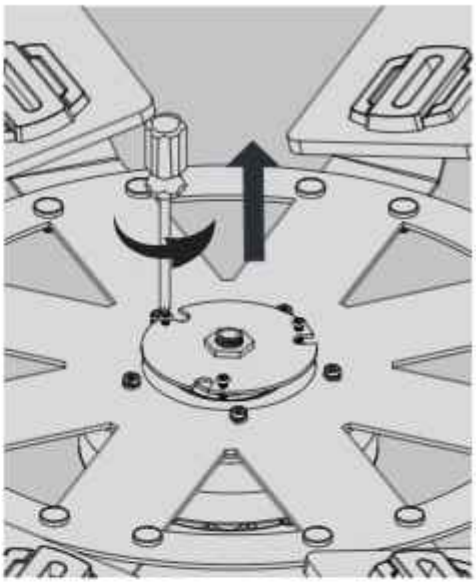

❺ Loosen the screws of the triangular cover on the motor with an electric drill

Note:

- The fan blade needs to be aligned with the "center" position of the screw hole group.
- Do not lock the screws when installing the blades and then tighten all the screws after all the fan blades are installed.

Step 3: Installation of LED Board

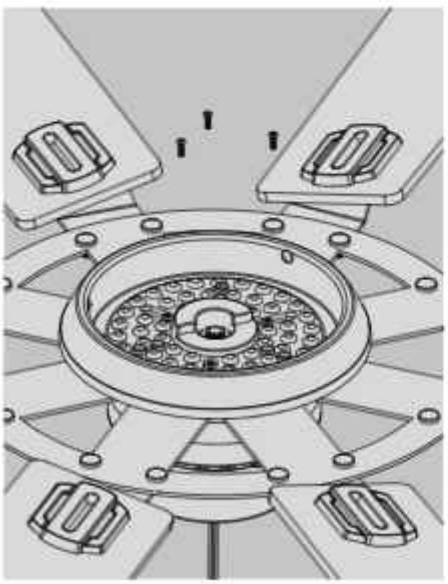

❶ Align the LED board with the triangular cover on the motor and put it on.

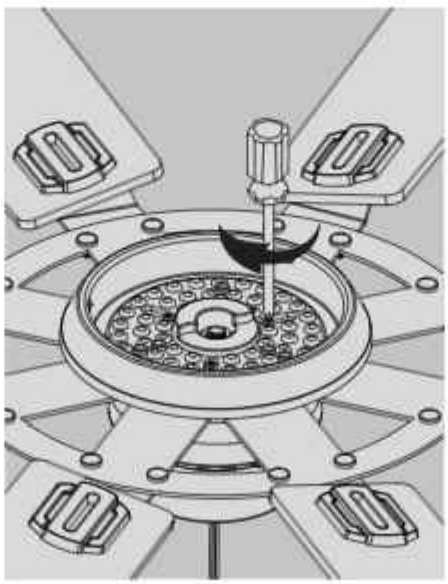

❷ Install the screws on the triangular cover into the corresponding holes.

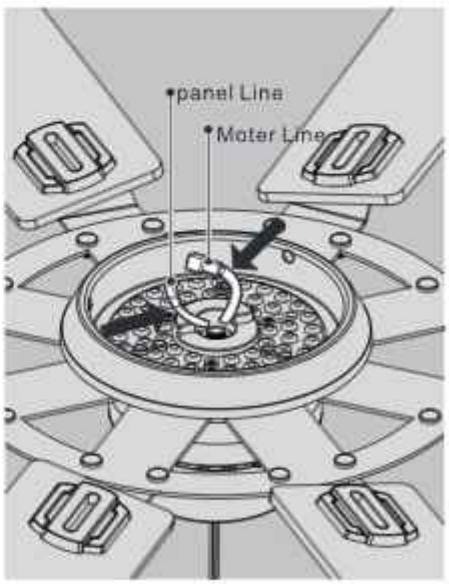

❸ Thread the light line through the LED board, then connect the motor line and the lamp panel line.

Step 4: Downrod Installation

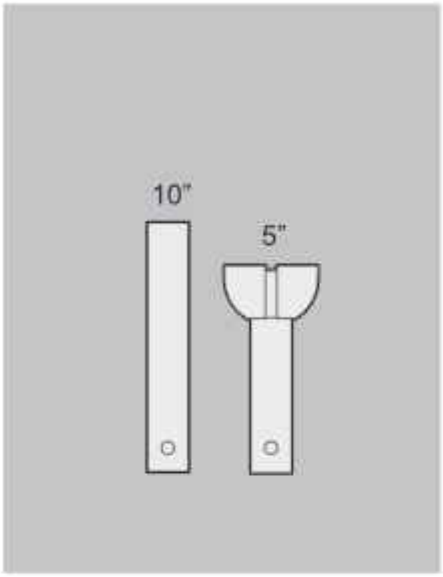

❶ Select a suitable downrod. (2 lengths are available 5"/10")

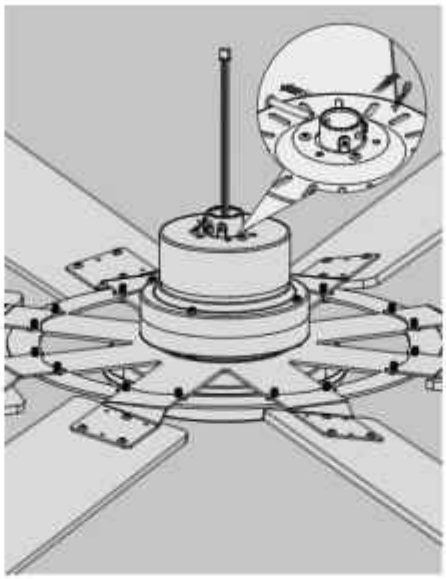

❷ Take out clevis pin on the motor.

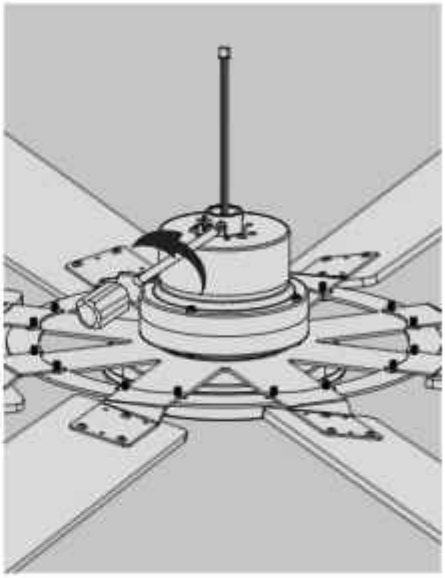

❸ Loosen the screws on the motor, and do not take them out completely.

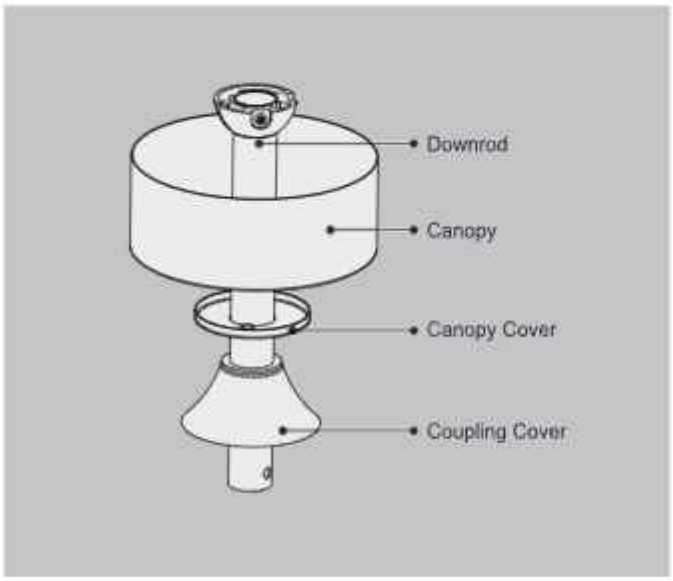

❹ Assemble the canopy, canopy cover and coupling cover to the downrod in turn.

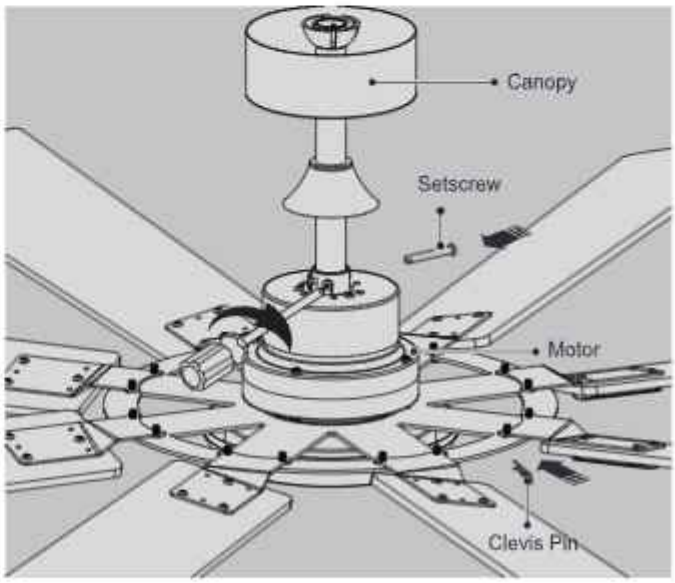

❺ Thread the motor wire through the lower pull rod, lock the fixing screw with the clevis pin, and tighten the motor screw.

Step 5: Installation of the Assembled Fan

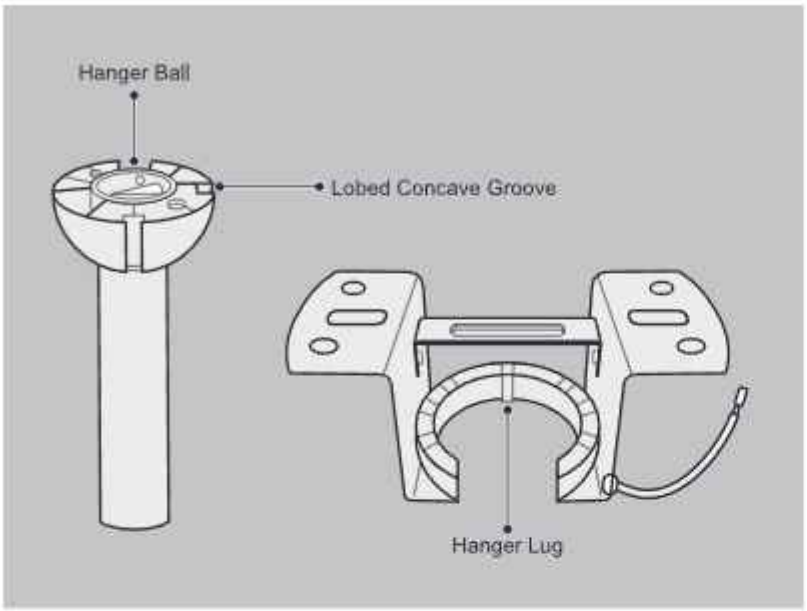

❶ Lift the assembled fan onto the mounting bracket.

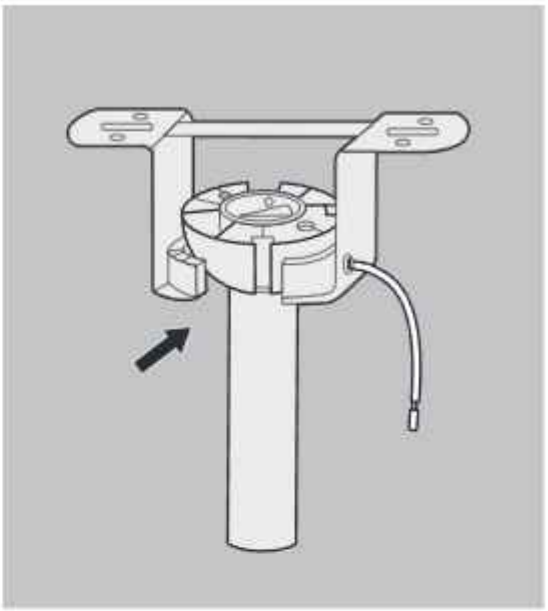

❷ Ensure the concave groove of the hanger ball is positioned on the hanger lug of the mounting bracket.

Step 6: Wiring Instruction

⚠ Shut off the power to the fuse box or circuit breaker before wiring.

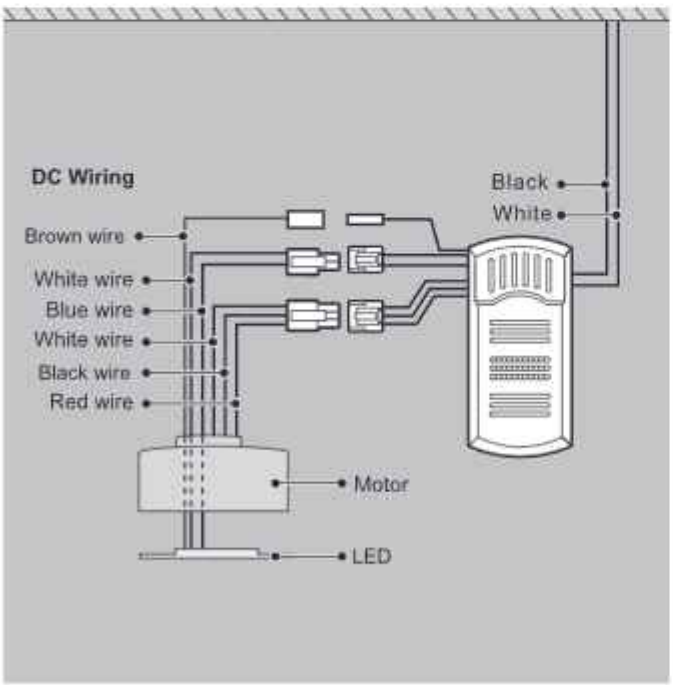

❶ The receiver is connected to the motor power cord and the ceiling power cord respectively.

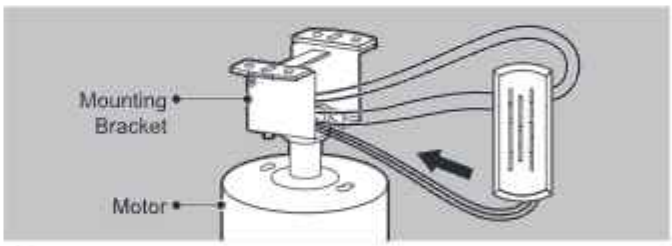

❷ Put the receiver into the mounting bracket.

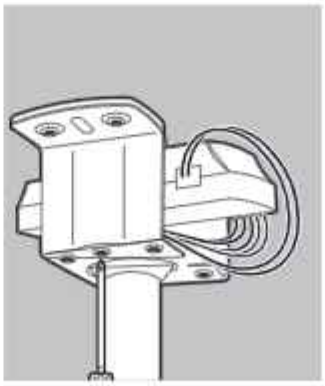

❸ Cover the receiver and power cord and tighten the screws.



❹ Decorative cover on, rotate, tighten.

Note:
Connect wires color to color, plug to plug.

L Live Wire

N Neutral Wire

Ground Wire

Step 7: Install the Lampshade

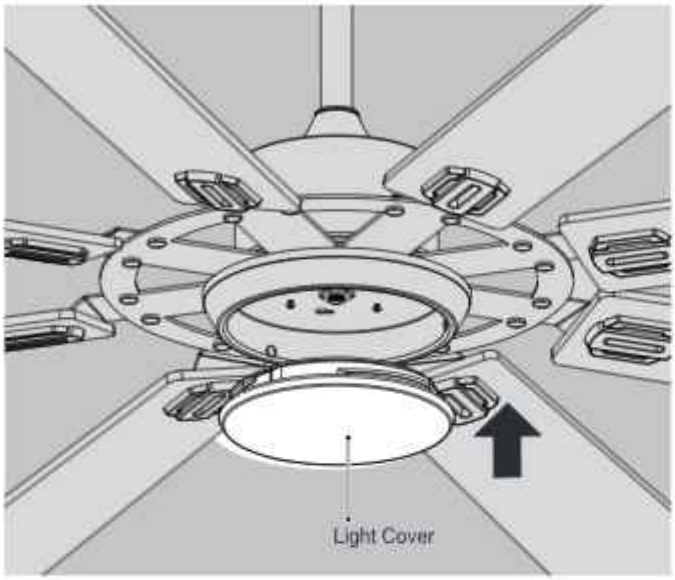

❶ Put the light cover to the LED board.

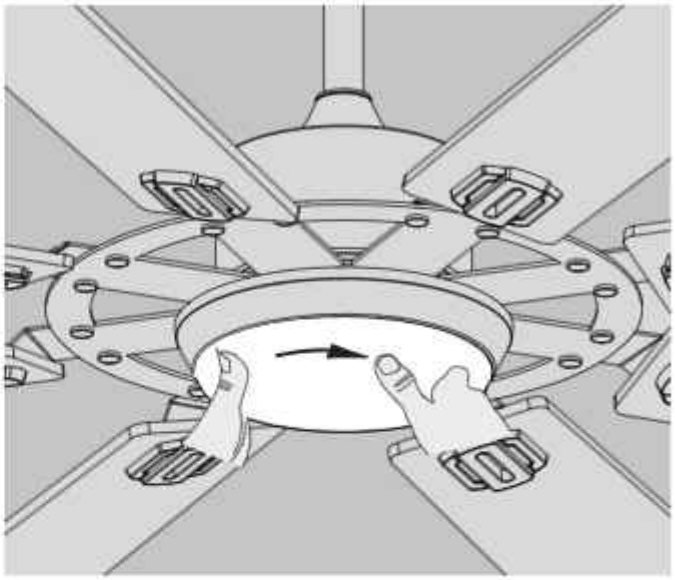

❷ Spin forward to tighten the light cover.

Step 8: Change Downrod(OPT)

How to choose different lengths of downrod

1. The ceiling of the house is 100 inches from the ground, suitable for installing a 5-inch downrod.
2. The ceiling distance of the house is 110 inches, which is suitable for installing a 10-inch downrod.
3. The ceiling of the house is 120 inches from the ground, which is suitable for installing a 14-inch downrod.
4. If the space requires a longer boom, you will need to use a longer extension wire, the wire thickness should be selected close to the motor wire thickness, too thick or too thin (changing the resistance required by the receiver), the motor may not work.

NOTICE

If the house suitable for installing a 1.5m(590 inches), it should a new controller, Please contact us for customization

If you need to change different length downrod, please follow these steps:

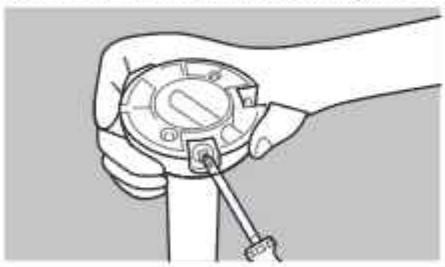

❶ Loosen the screws on the hanging ball.

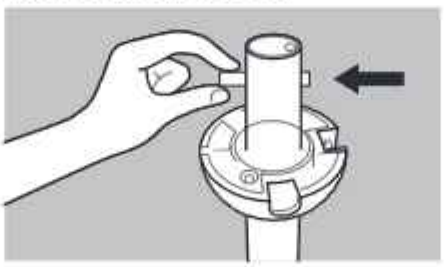

❷ Remove the metal bar.

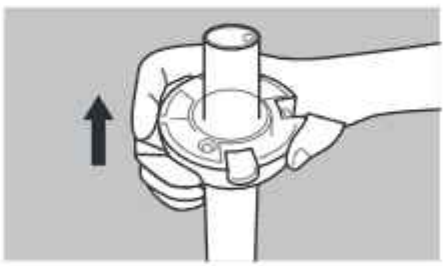

❸ Take off the hanging ball from the original downrod.

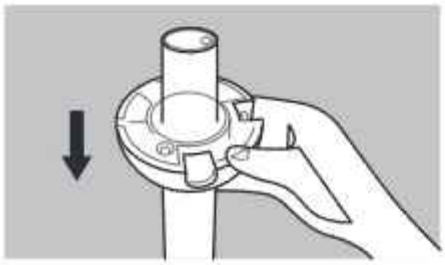

❹ Install the hanging ball to an appropriate downrod.

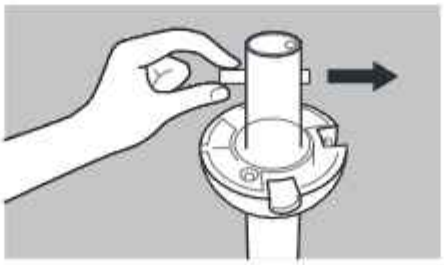

❺ Insert the metal bar .



❻ Tighten the screws.

OPERATION INSTRUCTION

Control Method

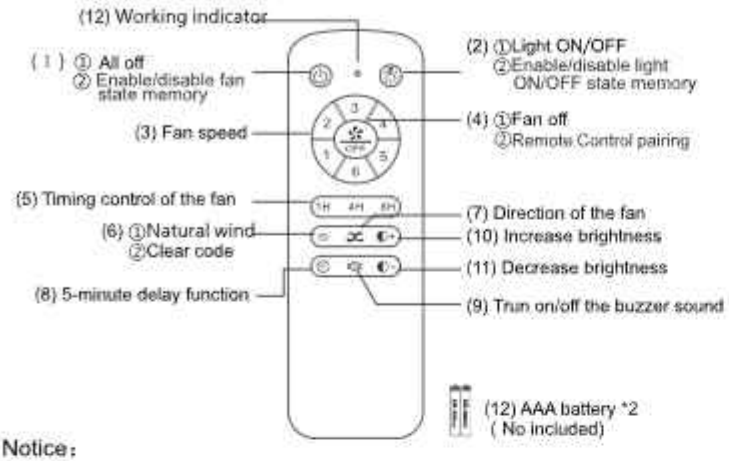

Notice：

The remote controller only needs to be paired once. After the paired product, the controller will have memory. The products have been paired before leaving the factory. When the remote control is damaged or lost, it is necessary to implement remote control pairing before using a new remote control.

(1) **All OFF:**
- Turn OFF the Fan and Light together.
- Long press:press and hold the key for 2-3 seconds. A long press produces a long beep to activate the memory function for the fan's state before power-off. A long Pressing again will produce two short beeps to deactivate the memory function.

(2) **Light ON/OFF:**
- Press the key to turn on or turn off the light.
- Long press:press and hold the key for 2-3 seconds. A long press produces a long beep to activate the memory function for the light's state(on or off) before power-off. A long Pressing again will produce two short beeps to deactivate the memory function.

(Just remember the state (on or off) of the light, not the light's color temperature)

(3) **Fan speed:**
- Press keys 1-6 to adjust the fan speed.

(4) **Fan OFF / Remote control pairing:**
- Turn OFF the fan.
- For remote control pairing, press and hold the button for 3-5 seconds within 30 seconds of powering on. The buzzer will emit a long beep to confirm that the pairing is complete.
  Note: The remote controller only needs to be paired once. After pairing, it will retain memory. Products are pre-paired at the factory. If the remote control is damaged or lost, pairing with a new remote control is necessary before use.

(5) **Timing control of the Fan:**
- Press the 1H/4H/8H keys to set the fan timer for 1, 4, or 8 hours. The fan will automatically turn off when the timer ends. During the timing function, all functions of the ceiling fan can be operated.To cancel the timer setting, press key(1) or key(7) while the timing function is active.

(6) **Natural wind:**
- Press the key to activate the natural wind mode, which automatically adjusts the fan speed between levels 1 and 6.
- Press and hold this button until a long beep is heard to clear the code. Then, press and hold the 'FAN OFF' button to re-pair and restore the program to factory settings.

(7) **Direction of the fan:**
- Change the direction of the fan using the appropriate controls.

(8) **5-minute delay function:**
- Press the key to activate the 5-minute delay function for the light, after which it will automatically turn off.
- Note: After the delay, the fan remains unchanged. This function is primarily for pre-sleep lighting delays. If used before leaving, you'll need to manually turn off the fan with 'Fan OFF'.

(9) **Turn ON/OFF the buzzer sound:**
- Press the key to toggle the buzzer sound on or off.

(10) **Increase brightness:**
- Press the key to increase brightness.

(11) **Decrease brightness:**
- Press the key to decrease brightness.

AAA battery (2):
- Install 2 AAA batteries before use.
- Remove the batteries when not in use for an extended period.

Reversible Function



Summer (Forward):
A downward airflow creates a cooling effect.



Winter (Reverse):
An upward airflow increases the indoor temperature.

PS: If you want to change the fan's rotation direction, please press the button while the fan is running.

Timing Control

1H: The fan will automatically shut off after 1 hour.
4H: The fan will automatically shut off after 4 hours.
8H: The fan will automatically shut off after 8 hours.

Close the Timing Control: Press the button "FAN ON/OFF"

Memory function of LED light color temperature.

Our LED Light comes with a color temperature memory function. If the light is turned off for less than 7 seconds and then turned on again, it will switch to the next color temperature. If the light is turned off for more than 7 seconds and then turned on again, it will remember the color temperature from before it was turned off.

Note: The LED light may not correspond with the image. Please refer to the actual product.



SPECIFICATIONS

Product Name	Ceiling Fan	Size	72"
		Gross Weight	9KG
Rated Voltage	120V 60Hz	Motor Power	45W
Lamp configuration	22W LED	Motor Spec	ø153X15
Lampshade size	ø230mm	Overall height	335mm(with 5" rod)
control method	Remote Control	Fan blade	8 Splint Fan Blades

TROUBLESHOOTING

If there is a problem with the fan during use, please check the following tips for solutions. If the problem still cannot be solved, please contact our after-sales team.

The Fan Dose Not Respond to the Remote Control.

- Check that all wire connections are correct and secure.
- Verify that the power is turned on and reaching the receiver.
- Verify that the batteries of the remote control are installed with the correct polarity, making sure to install the + (positive) end of the batteries on the solid end and the - (negative) end on the spring.

The Fan Makes a Humming Noise.

- Make sure the controls you use are supplied with your fan.
- Make sure all accessories are securely fastened. Loose parts often cause a vibrating noise or buzzing sound.
- Disassemble the fan and reinstalling it can sometimes remedy this resonant vibrating noise.

The Fan Makes a Repetitive Ticking Noise.

- Check for obstructions in the rotor path.
- Make sure mounting hardware at the ceiling is firmly fasten.
- Make sure all other hardware and blade attachments are tight.
- Give the fan a "Break in Period" of a few hours to a few days, then repeat the steps above.

The Fan Wobbles.

- Make sure the mounting plate and hardware at the ceiling are firmly fastened.
- Make sure all screw fittings on the fan are tight.
- If necessary, use the self-tapping screws provided to further secure the bracket to the joist.

Warning sound.

- In the case of a motor fault, a buzzer is typically used to emit a warning sound. When the motor lacks a phase, meaning that one of the phases is not functioning properly, the buzzer will emit a continuous single beep as a warning. This indicates that the motor is unable to operate correctly.
- if the motor gets stuck and cannot rotate, the buzzer will emit a continuous double beep as a warning. These warning sounds are intended to alert users to the abnormal conditions of the motor and prompt them to perform necessary repairs or inspections.

About light' color temperature

The remote control's light memory function can only remember the light's on/off state, not the color temperature. Therefore, we have added a program to remember the light's color temperature in the LED light itself. You can select/remember the light's color temperature by using the "light on/off" switch on the remote control. When you turn the light on and then off, the program will record the time of turning off. If the light is turned off for less than 7 seconds, when you turn it on again, the light will switch to the next color temperature. If the light is turned off for more than 7 seconds, when you turn it on again, the light will remember the last color temperature used. This program is designed this way because most people tend to use a specific color temperature continuously until they no longer need it and turn it off, which usually takes more than 7 seconds.

It is normal for some LED light to require to be turned off for more than 30 seconds to remember the last color temperature used. The exact time required for the light source to remember the last color temperature may vary depending on the specific light source and its programming. However, the default time of 7 seconds for remembering the last color temperature used is suitable for most LED lights.

CONTACT INFORMATION

We want to hear your voice! Feel free to touch base if you encounter any issue when using our product(s) or want to know more about our brand.
We will be more than happy to provide top-notch pre-sales & after-sales service 24/7.