Duravit No.1 Toilet seat and cover # 0020710000

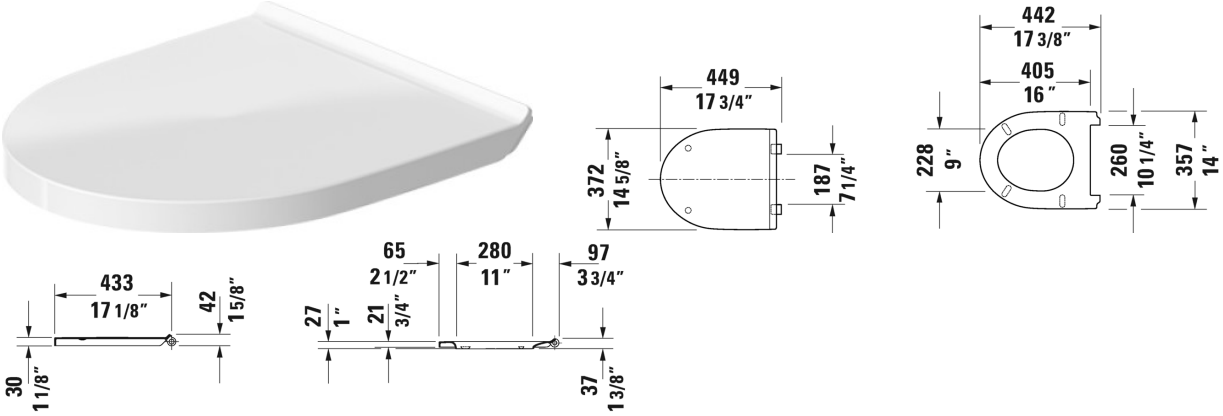

Toilet seat and cover	Dimension	Weight	Order number
hinges stainless steel, without slow close			
Colors			
00 White			
Variant			
		6.4 lb	0020710000
Suitable products			
Toilet wall-mounted Duravit Rimless® rimless, washdown model, cUPC® listed*, WaterSense® listed, 14 3/8" x 21 1/4" Inch	14 3/8" x 21 1/4" Inch		256209
Toilet close-coupled Duravit Rimless® rimless, (without tank), washdown model, hardware included, Outlet for Vario connector set, for horizontal and vertical outlet, length adjustable from 2 3/4" - 6 3/4", and vario connecting bend, vertical outlet from 6 1/4" - 9", WaterSense® listed, cUPC® listed*, 14 3/8" x 25 5/8" Inch	14 3/8" x 25 5/8" Inch		218209

All drawings contain the necessary measurements which are subject to standard tolerances. They are stated in inch & mm and are non-binding. Exact measurements, in particular for customized installation scenarios, can only be taken from the finished ceramic piece.