DROP-IN KITCHEN SINK

Installation Instructions

Thank you for choosing our Drop-in Kitchen Sink! Please carefully read the instructions before installation and save them for future reference.

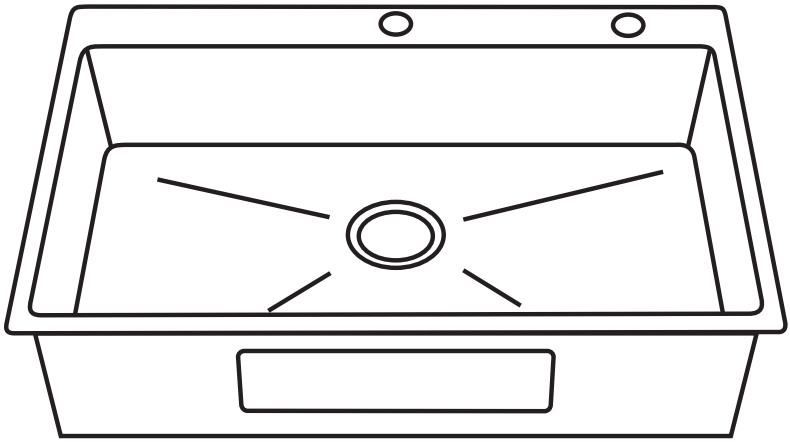

Installation Instructions

● Ask a professional plumber or installer experienced in handling drop-in kitchen sinks to install the sink or consult them to minimize the risk of leaks or damage if unsure about the installation details.
● Do not attempt to install the drop-in kitchen sink alone. Ask one or more partners for help.
● Be careful to avoid any damage to the countertop, sink fixture, faucet, or personal injury during installation.
● Ensure the drop-in kitchen sink is installed correctly and secured adequately before use.

Tools Required

The following tools ***(Not Included)*** may be required during installation. Please prepare them well following the actual condition.

① Safety Glasses ② Marker ③ Silicone Adhesive Sealant
④ Jigsaw ⑤ Cleaning Rags ⑥ Wood Braces
⑦ Level Screws ⑧ Flat-Bladed Screwdriver ⑨ Pencil
⑩ Tape Measure ⑪ Glove

Installation Steps

1 Prepare the Countertop

Measure the size and trace a sink bottom layout on the countertop with a pencil.

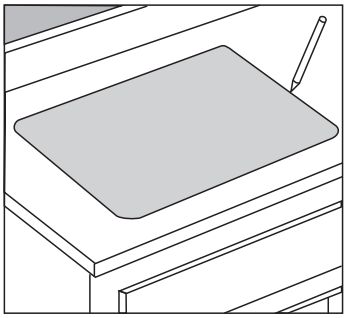

2 Cut the Countertop

● Carefully cut a suitable opening in the countertop following the layout trace, using a jigsaw suitable for cutting the material of your countertop.
● Test and ensure that the sink fits the opening,

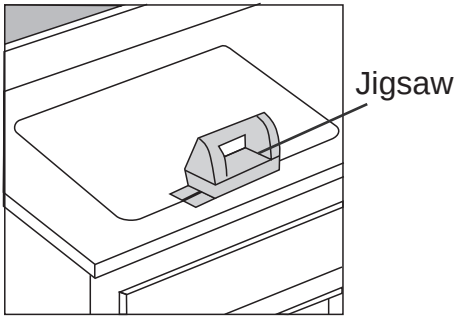

3 Apply Silicone Sealant or Plumber's Putty

● Clean and dry the rim surface of the sink.
● Turn the sink upside down and apply the sealant/plumber's putty ***(Not Included)*** to the sink rim bottom.

4 Fit the Sink to the Countertop

● Place the sink down into the pre-cut opening.
● Press the sink rim surface to make the sink rim and countertop contact firmly.
● Remove excess sealant/plumber's putty.
● ***Allow the sealant/plumber's putty to settle for 30-60 minutes.***

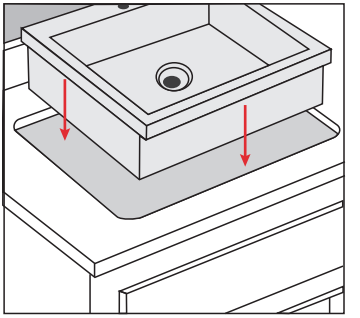

5 Attach Mounting Clips

A. This sinkis specifically designed to be above-mounted in a solid surface countertop only.

● Slightly bend the unbent side of the mounting clips to fit and support the sink bottom.
● Attach the mounting clips to the protruding hooks below the sink edges. ***Ensure the originally bent side of the mounting clips is facing away from the sink.***
● Tighten the screws on the mounting clips in the front, back, and sides of the sink sequentially, to contact and support the countertop. ***Tighten the screws adequately but not excessively.***

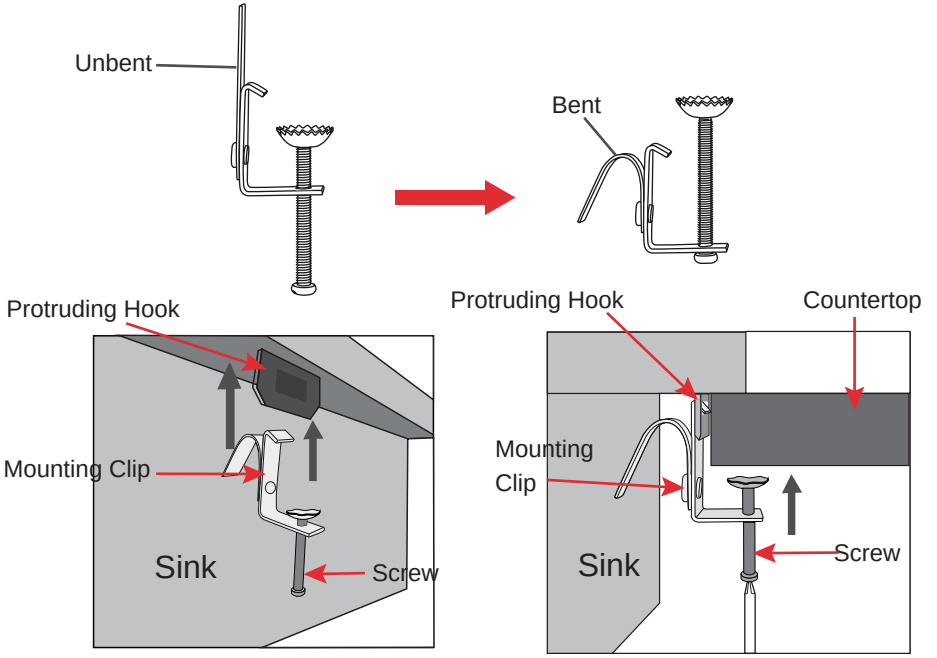

B. This sinkis specifically designed to be under-mounted in a solid surface countertop only.

● Cut out countertop using this template.
● Determine placement of clip brackets as indicated by template. Pre-drill holes according to method desired based on countertop material.
● Apply a bead of Silicon evenly along edge on underside of cuntertop.
● Position and align sink over opening. Press sink onto Silicon seal.
● After re-checking alignment, tighten clip brackets against sink edge.
● Remove excess Silicon.

NOTE: THIS TEMPLATE IS ONLYAGUIDE. ACTUAL SINK SHOULD BE PRESENT TO ENSURE PERFECT CUT OUT.
HINT: After Silicon cures, wipe inside edge with denatured alcohol. This will smooth out any rough areas.

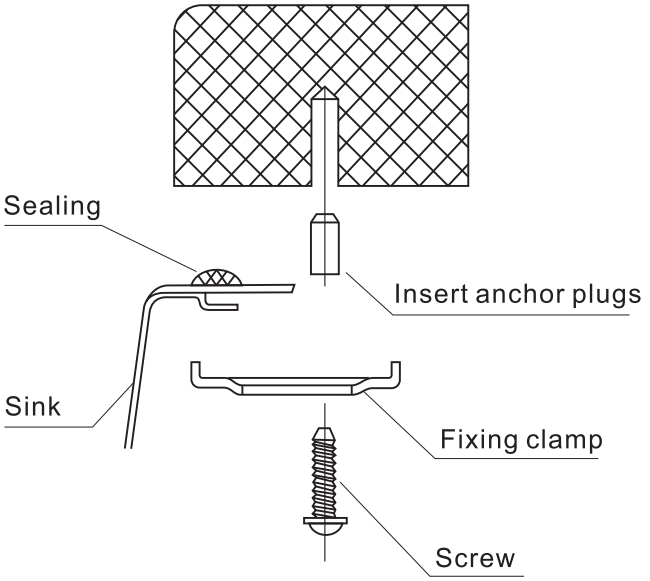

6 Dismantle the Sink Drain Assembly Kit

- Remove the cap and pull away the strainer basket to expose the strainer
- Rotate and remove the screw in the middle of the strainer to loosen all remaining parts.

7 Assemble the Sink Drain Assembly Kit

- Assemble the dismantled sink drain assembly kit to the sink in a sequence as shown below.
- Connect the trap ***(Not Included)*** to the drain and the water supply system to the faucet ***(Not Included)*** according to the manufacturer's instructions.
- Drain water into the sink and check for leaks.

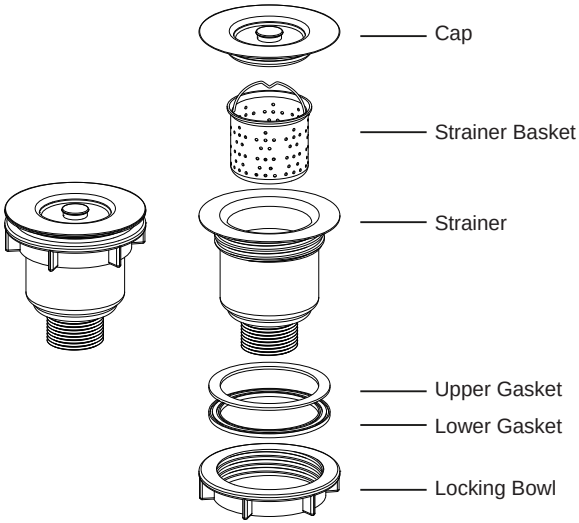

8 After Assembly

- Place the bottom grid into the sink with its support legs down and the holes aligned.
- Place the chopping board, dish drying rack, and colander basket on the sink top for use.

DO

1. Use a soft towel with some washer fluid and warm water to wipe the sink daily. Wipe it dry at last.
2. Rinse the sink after using any cleaning agent and wipe dry.
3. If any mineral substance is built up on the sink, clean it up as soon as possible.
4. Properly remove the rust, molds, or scratches with a scouring pad. Choose a dry, clean, and non-scratch scouring pad. Follow the direction of the brush to remove rust.
5. Keep the sink dry after use. Any standing water can cause mineral deposits accumulation, which could cause water stains.

DO NOT

1. Leave water spots, utensils, or steel cookware in the sink for a long time, which could cause rust spots on the sink surface.
2. Leave cleaning agents or bleach in the sink for a long time, which may cause the sink to discolor or damage the surface.
3. Use steel wool to rub the sink.
4. Leave rubber mats, cleaning pads, or sponges in the sink for a long time as this may ruin the finish of your sink.
5. Cut food in the sink.
6. Use hard water in the sink, which may also cause rust stains.

Care & Maintenance

Troubleshooting		
Problems	**Causes**	**Solutions**
Rust in the sink	● Metal objects (metal pans, utensils, flatware, metal cans, etc.) with the potential to cause rust, are left in the sink for days. ● The water contains iron, which may cause rust. ● The dish detergent is in a metal bottle or built-in soap dispenser. ● Wet sponges or colored towels are left in the sink for days.	● Remove the metal objects and clean the rust gently using a scouring pad. ● Get an iron filter for further water purity. ● Clean the sink after each use. Discontinue using the detergent if necessary. ● Remove the sponges/-colored towels and clean the rust gently using a scouring pad.
Scratches in the sink	● Improper packaging/ accessories can lead to scratch marks during transit. (We will try our best to pack the sinks well which would avoid scratches.) ● The sink can be easily scratched by sharp objects.	● Use a soft cloth to clean the sink. ● Minor Scratch: Use a sponge with toothpaste to polish it repeatedly. ● Moderate Scratch: Use a scouring pad to polish small areas. ● Serious Scratch: Use a stainless steel clean and polish.
Water stains in the sink	● Water stains are normal for a kitchen sink and easy to wash out.	● Try scouring powder to remove the water stains. ● Use a soft towel with some washer fluid and warm water to wipe the sink daily. Wipe it dry at last.

Attention

(1) Read the installation and maintenance instructions thoroughly before installation.
(2) Be careful to avoid any damage to the countertop, sink fixture, faucet, or personal injury during installation.
(3) Wear safety gloves and protective gear and use caution to move or mount the drop-in kitchen sink slowly after unboxing, considering its weight and sharp edges.
(4) Do not attempt to install the drop-in kitchen sink alone. Ask one or more partners for help.
(5) Ask a professional plumber or installer experienced in handling drop-in kitchen sinks to install the sink or consult them to minimize the risk of leaks or damage if unsure about the installation details.
(6) Ensure that the countertop can support the sink's weight before installing the drop-in kitchen sink.
(7) Avoid applying excessive force or pressure to the drop-in kitchen sink for longevity.
(8) Ensure the drop-in kitchen sink is installed correctly and secured adequately before use.
(9) Regularly clean the drop-in kitchen sink using mild soap or a non-abrasive cleaner, and rinse thoroughly after cleaning.
(10) Do not expose the drop-in kitchen sink to extreme temperatures.
(11) Periodically inspect the drop-in kitchen sink for any signs of leaks, loose parts, or damage. If any issues are detected, contact a professional plumber for repairs.