Planetary Stand Commercial Bench Mixer
Instruction Manual

GEM110
10 Qt

GEM120
20 Qt

GEM130
30 Qt

This manual contains important information regarding your unit. Please read this manual thoroughly prior to equipment set-up, operation, and maintenance. Failure to comply with regular maintenance guidelines outlined in this manual may void the warranty.

Technical Services: Tel: 1.877.368.2797 | Fax: 954.202.7337 | TechnicalServices@thelegacycompanies.com

SAFETY WARNINGS

Please read all safety warnings carefully before operating this equipment.

- Proper grounding required: Plug the mixer into a properly grounded 3-prong outlet only. Using an ungrounded outlet can cause electric shock.
    - An electric shock may occur if no ground wire is present or if grounding is improper.
    - The ground wire must never be connected to a gas pipe, water pipe, lightning rod, or telephone line.
    - Check for electrical leakage after installation.
    - If the power cord is damaged, it must be replaced by an authorized service technician.
- Keep hands, hair, and loose clothing away from the mixing bowl and attachment while the mixer is running.
- **Do Not** put your hand into the mixing bowl during operation.
    - **Always d**isconnect power before installing or removing the mixing attachment.
- **Do Not** operate the mixer beyond its rated time limit, as this will reduce service life.
- Mount the mixer on a stable, clean, level surface.
    - Keep it away from excessively hot or wet environments, and away from equipment that produces strong electromagnetic fields.
- **Always** keep the machine clean: clean unit before use and in-between recipes.
- **Always** disconnect power before performing any maintenance, before installing or removing attachments.
    - Clean with a soft, slightly damp cloth only.
    - **Do Not** use liquid or spray detergents.
- If the equipment malfunctions, ensure it is serviced by a qualified technician or an authorized service center.
- **Do Not** use this unit for anything other than intended use
- **Do Not** use outdoors.
- Always use on a firm, dry and level surface at least 12" from walls or any other obstruction.
- **WARNING:** Do not use medium or high speed for kneading dough.
- Do not exceed the rated continuous run time printed on the data plate.
    - Overrunning the motor will cause permanent damage.

SPECIFICATIONS

SKU	GEM110	GEM120	GEM130
Unit Dimensions (in)	17.62" x 16.4" x 24.5"	17.62" x 20" x 29.8"	24" x 23.12" x 44.75"
Bowl Capacity	10 Quart	20 Quart	30 Quart
Max Capacity	See Table on Page 6		
Motor	0.45 kW	1.1 kW	1.5 kW
Electrical	120V ~ 60Hz	120V ~ 60Hz	120V ~ 60Hz
Cord Length	78"	78"	78"
Plug Type	NEMA 5-15P	NEMA 5-15P	NEMA 5-20P
Product Weight	88.2 lbs (40.0 kg)	187.4 lbs (85 kg)	374.8 lbs (170.0 kg)
Shipping Weight	119.1 lbs (54.0 kg)	235.9 lbs (107.0 kg)	451.9 lbs (205.0 kg)
Included Components	Bowl, Attachments: Beater, Whip, Dough Hook	Bowl, Attachments: Beater, Whip, Dough Hook	Bowl, Attachments: Beater, Whip, Dough Hook
Stirring Shaft Speeds (RPM)	GEM110	GEM120	GEM130
1st Speed	115	120	118
2nd Speed	254	282	214
3rd Speed	420	404	364

MACHINE COMPONENTS

The following numbered components are referenced throughout this manual:

Component No.	Description
1	Gear change hand lever
2	Stirring shaft
3	Mixer head
4	Stainless steel bowl
5	Power switch
6	Bent lever
7	Safety Guard
8	Support / bowl lift arm

INSTALLATION & SETUP

Installing the Mixing Attachment

Insert the stirring shaft (2) into the mixer head (3) and rotate it clockwise until it locks securely in place.

OPERATION

Starting the Mixer

1. Pull the gear change hand lever (1) to position 1 before starting. Ensure the safety guard is in the closed position.
2. Turn on the power switch (5).
3. Once the mixer is running normally, pull the bent lever (6) to the highest point and lift the support (7) to its highest position.
4. Set the desired speed using the gear change hand lever (1).

Changing Speeds

- The GEM130 must be fully powered off before changing speeds.

To change speed while the mixer is running - GEM110 and GEM120 only:

1. Pull the bent lever (6) down to its lowest point.
2. Move the gear change hand lever (1) to the desired speed position.
3. Pull the bent lever (6) back up to its highest point and raise the support (7) to its highest position. The mixer will resume normal operation.

To change speed on the GEM130:

1. Turn off the power switch (5).
2. Move the gear change hand lever (1) to the desired speed position.
3. Turn the power switch (5) back on.

Shutting Down

1. Turn off the power switch (5).
2. Pull the gear change hand lever (1) back to position 1.
3. Pull the bent lever (6) down to its lowest point.
4. Disconnect the power supply.

MIXING ATTACHMENTS & FUNCTIONS

Installing the Mixing Attachment: When mixing always use the correct agitator for the job.
Three mixing attachments are included with each mixer. Select the appropriate attachment based on the ingredients being mixed.

***CAUTION!** Do not overload. Please always respect the maximum flour / water/ dough capacity indicated on the product and in this user manual. Do not mix products with other attachment or larger quantities than indicated in this user manual, to prevent strain on the motor and gears, and damage to the attachments. Not respecting the maximum loads indicated in this user manual would invalidate the warranty on your mixer.

Attachment			Best Used For	Recommended Speed
	1	Flat Beater	Paste, powder, and loose or crumbly ingredients such as stuffing. Cake batter, cookie dough, mashed potatoes, and other medium-textured mixtures.	Start on low speed; finish on medium speed. Do not run for more than 15 minutes.
	2	Dough Hook	Heavy, sticky ingredients such as bread or pizza dough.	Low speed only. Do not use on high speed. Do not run for more than 20 minutes.
	3	Wire Whip / Whisk	Liquid ingredients such as cream, eggs, butter, meringue, and other light-textured mixtures.	Medium or high speed. Do not run for more than 15 minutes.

OPTIONAL ATTACHMENT: MEAT MINCER HEAD

A meat mincer head is available as an optional accessory. To install and use it:

1. Stop the mixer and turn off the power switch (5).
2. Loosen the stud bolt and lift the top cover of the mixer head.
3. Attach the meat mincer head and tighten the stud bolt securely.
4. Use 1st speed only when mincing meat.

MAINTENANCE

Regular maintenance will extend the life of your mixer and ensure safe, hygienic operation.

Daily / After Each Use

- Clean the bowl, mixing attachment, and exterior of the mixer after every use.
- Wipe the machine down with a soft, slightly damp cloth. Do not use liquid or spray detergents.
- Ensure all parts are dry before reassembling or storing.

Every 6 Months

- Check the grease level in the transmission gear box.
- To add or replace the grease: open the top cover and fill grease through the aperture.
- Note: The gear box is packed with special-grade grease at the factory. Under normal conditions, grease should be checked and replenished every six months.

MIXER CAPACITY RECOMMENDATIONS

PRODUCT	AGITATOR	SPEEDS	10L	20L	30L
Egg Whites	Whip	1,2,3	1 1/2 pts	1 qt	1.5 qt
Mashed Potatoes	Beater	1,2	8 lbs	12 lbs	20 lbs
Mayonnaise (Quartts of Oil)	Whip	1,2	4 1/2 qts	10 qts	12 qts
Waffle or Hot Cake Batter	Whip	1,2	5 qts	8 qts	12 qts
Whipped Cream	Whip	1,2,3	2 1/2 qts	4 qts	6 qts
Cake, Box or Slab	Beater	1,2	8 lbs	16 lbs	22 lbs
Cake, Cup	Beater	1,2	8 lbs	16 lbs	22 lbs
Cake, Layer	Beater	1,2	8 lbs	16 lbs	22 lbs
Dough, Bread or Roll (Lt.-Med.) 60% AR	**Hook**	**1**	**8 lbs**	**16 lbs**	**20 lbs**
Dough, Heavy Bread 55% AR	**Hook**	**1**	**6 lbs**	**12 lbs**	**16 lbs**
Dough, Pie	**Hook**	**1**	**8 lbs**	**14 lbs**	**20 lbs**
Dough, Thin Pizza 40%	**Hook**	**1**	**N/R**	**N/R**	**10 lbs**
Dough, Med. Pizza 50% AR	**Hook**	**1**	**N/R**	**N/R**	**12 lbs**

- pts - Pints (US Liquid) / qts - Quarts (US Liquid) / lbs - Pounds (US Weight) / N/R - Not Recommended
- The maximum capacities are intended as a guideline only, varying factors such as the type of flour used, temperature of water used, and other conditions may require the batch to be reduced. (1 gallon of water weighs 8.33 lbs.)
- NOTE: AR% = (Absorption Ratio % - water weight divided by flour weight) The mixer capacity depends on the moisture content of the dough. The capacities mentioned above are based on flour at room temperature and 70°F water temperature. If high gluten flour is used, reduce above dough batch size to 10% If using chilled flour, water below 70°F, or ice, reduce batch size by 10% 2nd speed should never be used on 50% AR

***CAUTION!** Do not overload. Please always respect the maximum flour / water/ dough capacity indicated on the product and in this user manual. Do not mix products with other attachment or larger quantities than indicated in this user manual, to prevent strain on the motor and gears, and damage to the attachments. Not respecting the maximum loads indicated in this user manual would invalidate the warranty on your mixer.

TROUBLESHOOTING

Problem	Cause	Solution
Mixer does not start	Quick checks before troubleshooting	1) Confirm the mixer is plugged in. 2) Confirm the power switch (5) is on. 3) Confirm the safety guard is closed.
Stirring shaft does not rotate after starting	Loose electrical connections (internal)	Contact Technical Services — do not open the machine.
Oil leakage	Oil seals are worn out	Contact Technical Services — do not attempt this repair yourself.
Motor temperature rises and speed decreases	Voltage is too low	Check the power supply
	Machine is overloaded	Reduce the batch size
	Mixing speed is too high, or the wrong attachment is being used	Select the correct speed and attachment for the task
Attachment is hitting the bowl	Attachment or bowl is deformed	Contact Technical Services for repair or replacement.
Gearbox is making excessive noise or running hot	Insufficient lubrication	Add gearbox grease (see Maintenance Section). If the noise continues, contact Technical Services.

WARNING: If the mixer malfunctions, stop using it immediately. Have it inspected and repaired by a qualified technician at an authorized service center.

GEM110 — 10-Quart Mixer

Electrical Diagram

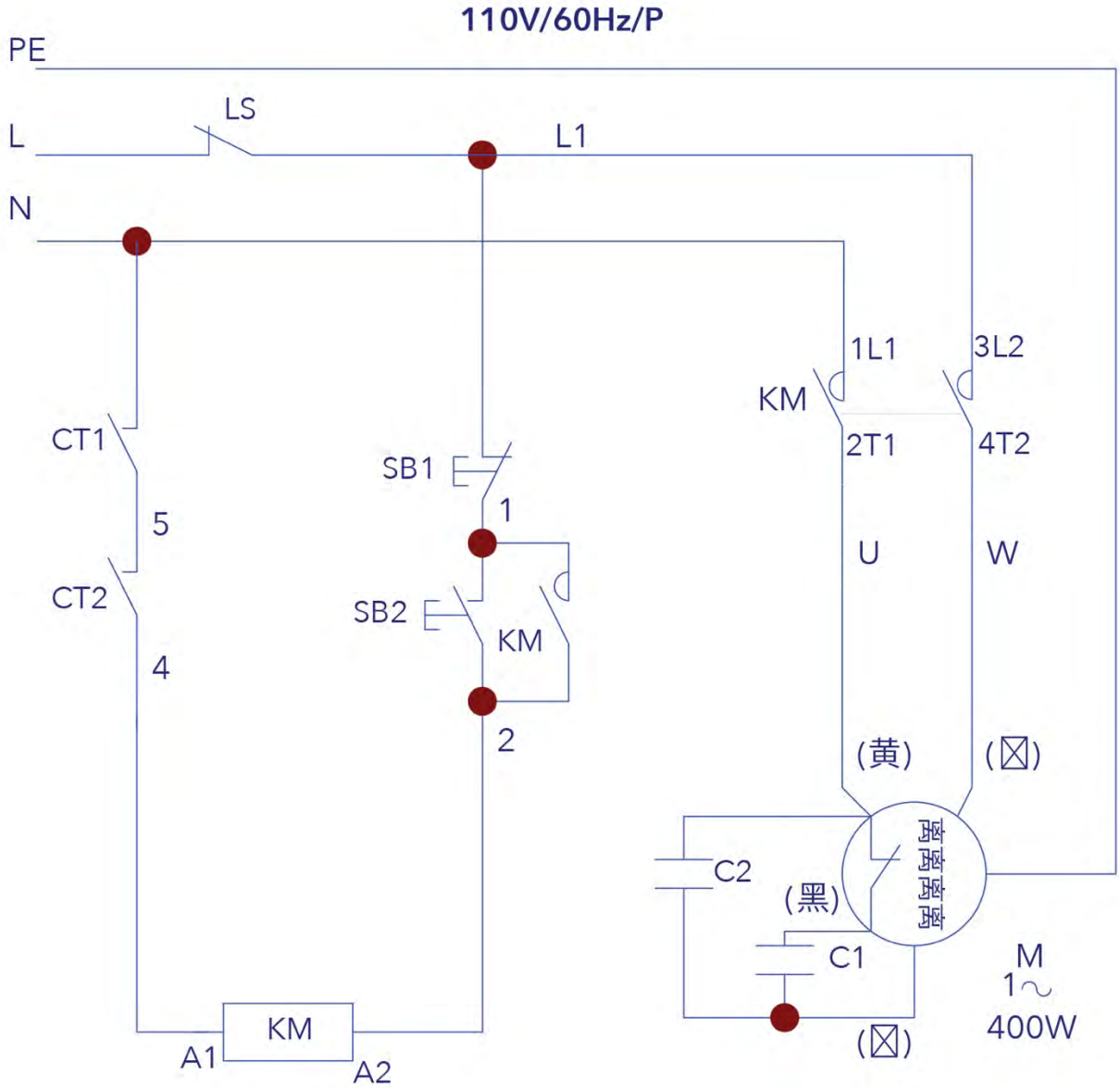

No.	PART NAME
C1	Starting Capacitor
C2	Working Capacitor
LS	Overcurrent Protector
CT1	Micro Switch
CT2	Micro Switch
SB1	Stop Button
SB2	Start Button
KM	AC Contactor
M	Motor

GEM110 — 10-Quart Mixer

Parts Diagram

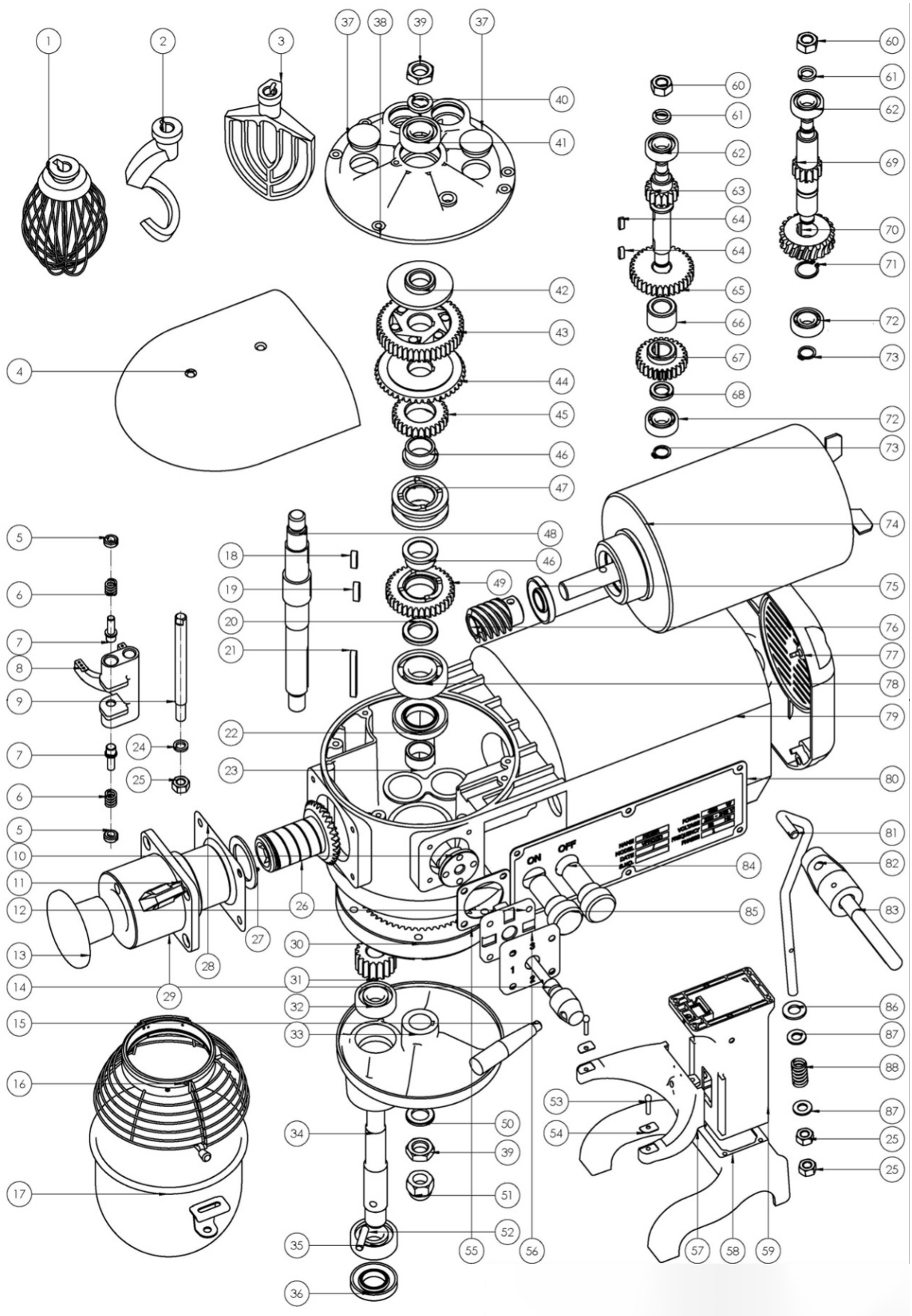

GEM110 — 10-Quart Mixer

Parts List

No.	PART NAME
1	Wire Whipper
2	Hook
3	Beater
4	Cover（Silver）
5	Adjusting Screw
6	Spring
7	Pin
8	Fork
9	Fork Shaft
10	Eccentric Seat
11	Peg Handle
12	Handle Seat
13	Bulkhead（Silver）
14	Handle Shaft
15	Speed Control
16	Safety Grid Components
17	Bowl
18	Flat Key 5x18
19	Flat Key 5x20
20	Bush
21	Flat Key 5x50
22	Skeleton Oil Seal 25x47x7
23	Bush
24	Spring Washer 8
25	Screw Nut M8
26	Bevel Gear
27	Gear Circlip
28	Pad
29	Mounts（Silver）
30	Inner Gear
31	Planetary Gear
32	Bearing 6202
33	Operation Shelf（Silver）
34	Rack Rachis
35	Bearing 6203
36	Skeleton Oil Seal 20x40x7
37	Support Cover
38	Support Cover
39	Nut
40	Spring Washer
41	Bearing
42	Main Shaft Cover
43	Mechanical Gear
44	Bevel Gear

45	Top Combination Gear
46	Copper Sets
47	Claw Clutches
48	Main Shaft
49	Bottom Combination Gear
50	Small Washer
51	Nut
52	Cylindrical Pin
53	Bowl Locating Pin
54	Bracket Plate
55	Pad
56	Handle Seat Cover
57	Bowl Cradle
58	Base（Silver）
59	Column（Silver）
60	Nut
61	Spring Washer
62	Bearing
63	Central Gear
64	Flat Key
65	Gear
66	Bush
67	Pinion Gear
68	Axis Bushing
69	Worm Shaft
70	Worm
71	Gear Circlip
72	Bearing
73	Gear Circlip
74	Motor
75	Oil Seal
76	Worm
77	Back Cover（Silver）
78	Bearing
79	Gear Box（Silver）
80	Badge
81	Link
82	Crank
83	Bowl Lift Lever
84	Stop Button
85	Start Button
86	Flat Washer
87	Flat Washer
88	Spring

GEM120 — 20-Quart Mixer

Electrical Diagram

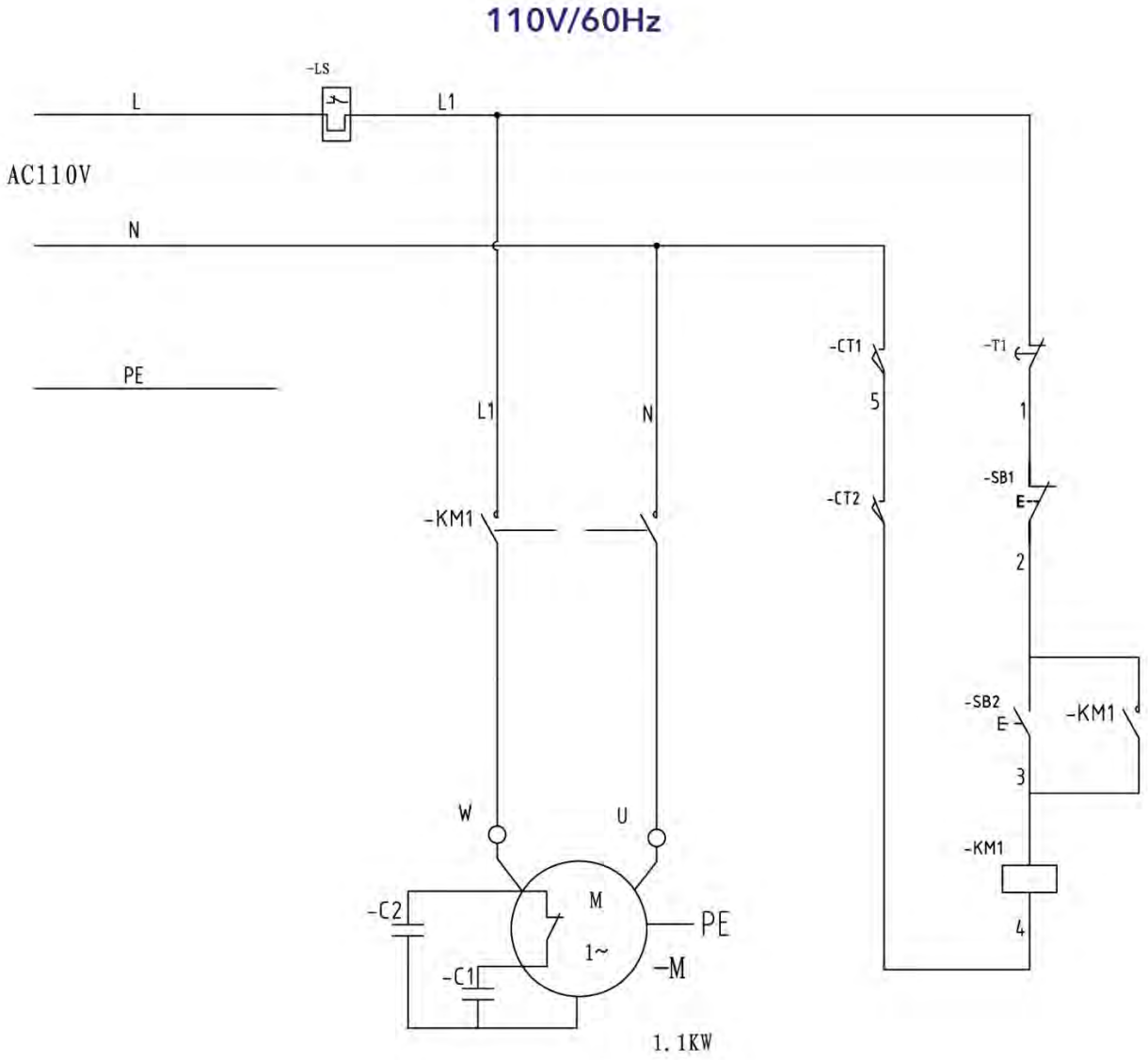

No.	PART NAME
M	Motor
KM1	AC Contactor
T1	Timer
CT1	Micro Switch
CT2	Micro Switch
SB1	Stop Button
SB2	Start Button
LS	Overcurrent Protector
C1	Starting Capacitor
C2	Working Capacitor

GEM120 — 20-Quart Mixer

Parts Diagram

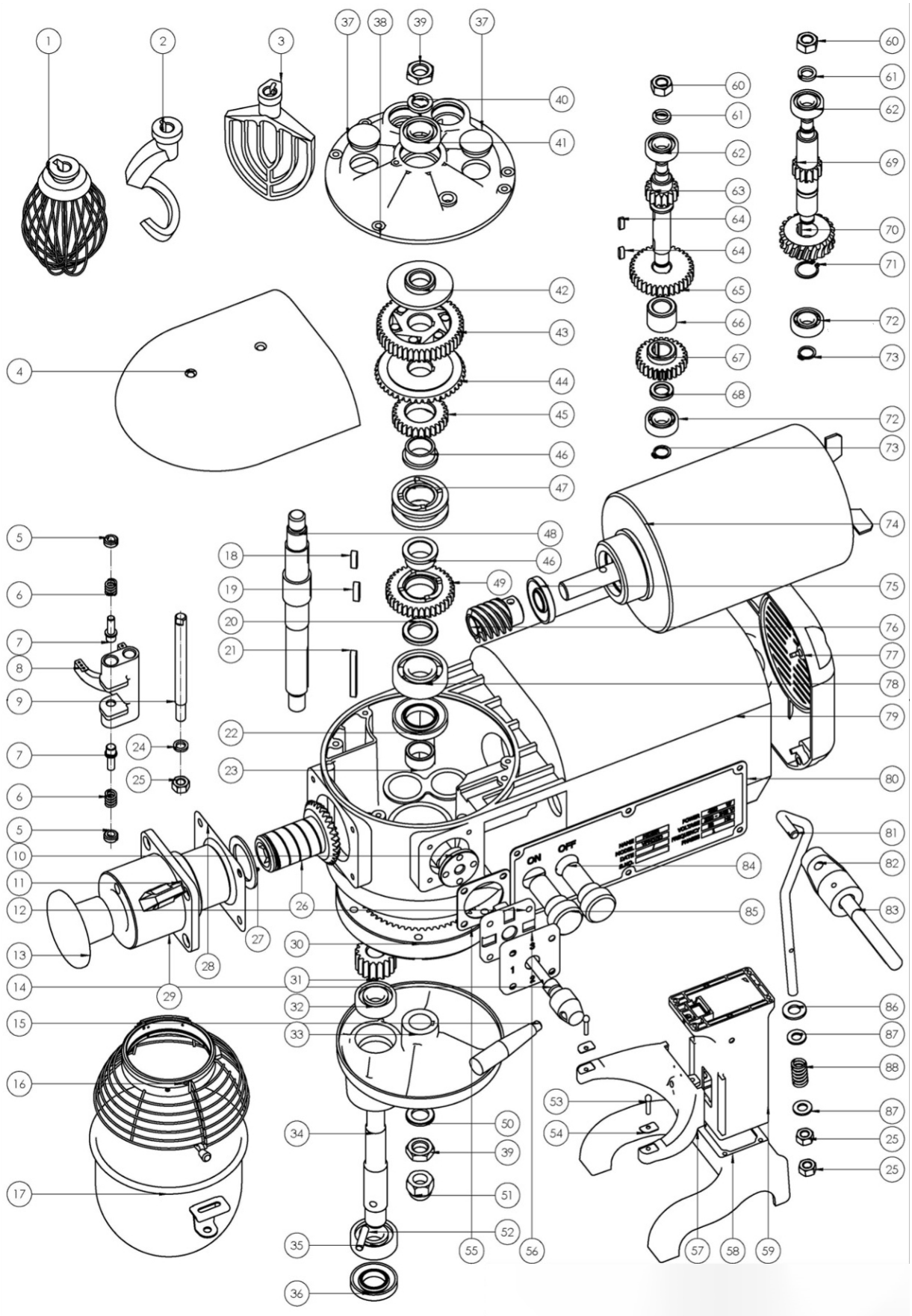

GEM120 — 20-Quart Mixer

Parts List

No.	PART NAME
1	Wire Whip
2	Spiral Dough Hook
3	Flat Beater
4	Safety Guard
5	Bowl
6	Plunger-Shifter Yoke
7	Spring
8	Pin Shaft
9	Shifting Yoke
10	Cam-Gear Shifter
11	Plate-Shifter Index
12	Handle-Shifter Cover
13	Handle-Shifter
14	Speed Control
15	Plug
16	Attachment Hub
17	Tighten Handle
18	Ring
19	Taper Gear Wheel
20	Top Cover
21	Nut
22	Pressing Plate
23	Plug Cover
24	Super Machine Parts
25	Declutch Shift Shaft
26	Ring
27	Nut
28	Main Shaft
29	Gear Box（Silver）
30	Internal Gear
31	Gear
32	Operating Shaft（Silver）
33	Bearing
34	Oil Seal
35	Working Shaft
36	Retainer-Pin
37	Spring Washers
39	Transmission Shaft Support
40	Bearing
41	Spacer-Lower
42	Circlips For Shaft

43	Taper Gear Wheel 1
44	Gear
45	Bushing
46	Sleeve
47	Claw Type Gear Wheel
48	Gasket
49	Bearing
50	Bushing
51	Oil Seal
52	Press Board
53	Bowl Cradle
54	Case（Silver）
55	Nut
56	Bearing
57	Mid-Gear Wheel
58	Key
59	Circlips For Shaft
60	Gear
61	Bushing
62	Gear
63	Plug Cover
64	Worm Wheel
65	Oil Seal
66	Green Button
67	Red Button
66-1	Red Button
67-1	Green Button
68	Brand
69	Motor Box
70	Key
71	Shaft Worm Gear
72	Gear
73	Motor
74	Back Housing
76	Bowl Lift Lever
77	Crank Lever
78	Connecting Rod
79	Stud（Silver）
80	Spacer
81	Spacer
82	Spring
83	Elliptical Long Handle Sleeve M8X58

GEM130 — 30-Quart Mixer

Electrical Diagram

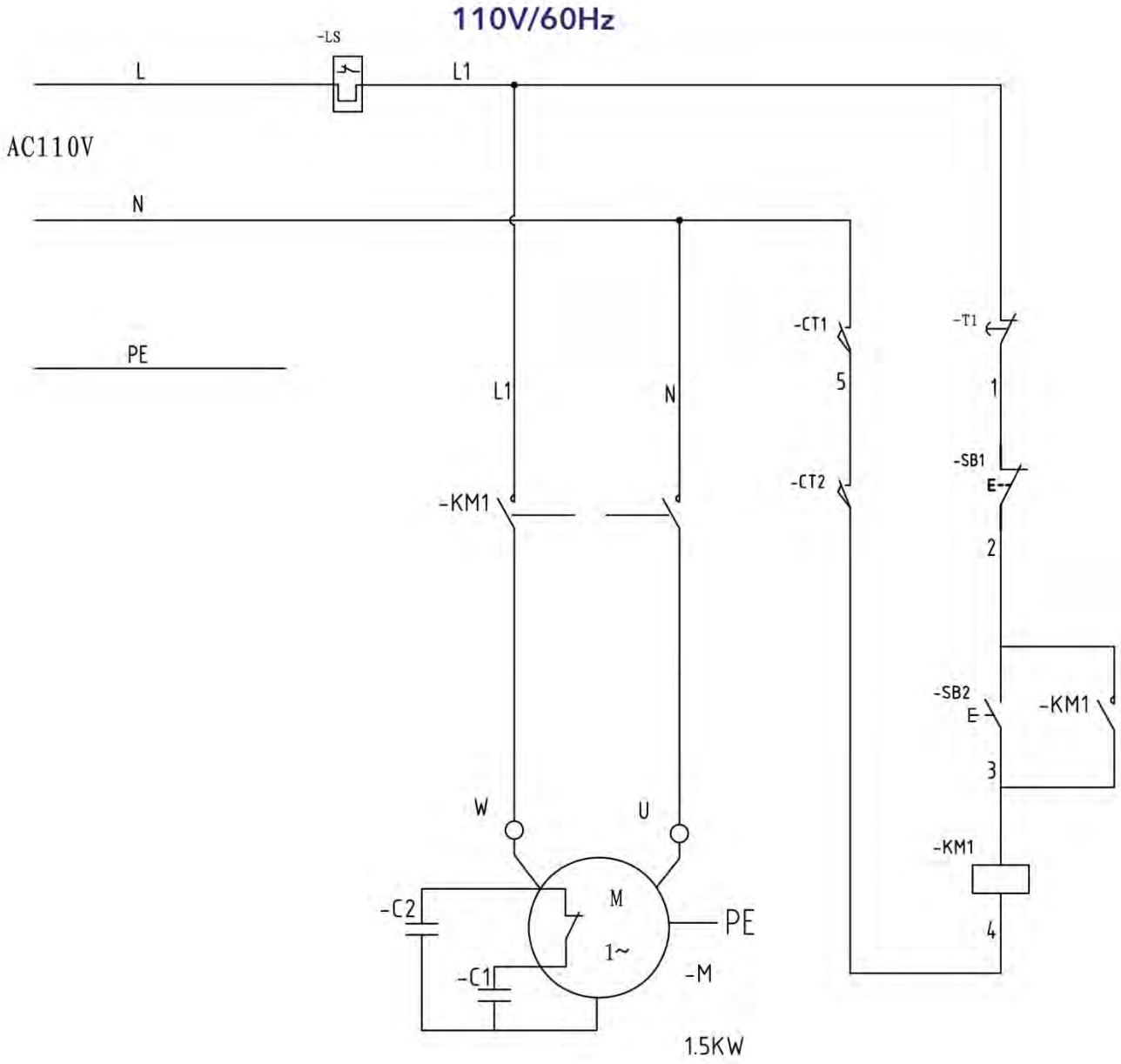

No.	PART NAME
M	Motor
KM1	AC Contactor
T1	Timer
CT1	Micro Switch
CT2	Micro Switch
SB1	Stop Button
SB2	Start Button
LS	Overcurrent Protector
C1	Starting Capacitor
C2	Working Capacitor

GEM130 — 30-Quart Mixer

Parts Diagram

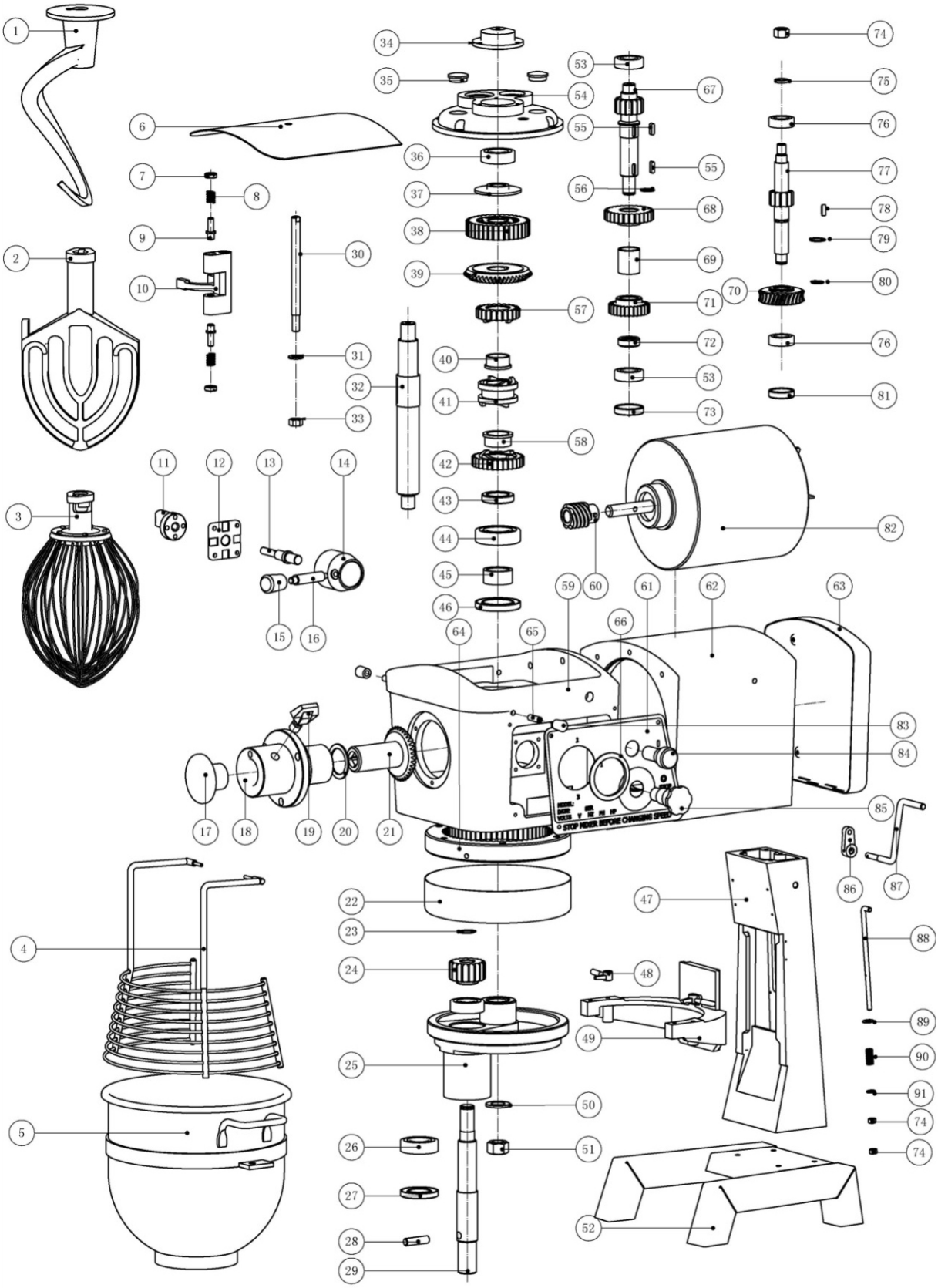

GEM130 — 30-Quart Mixer

Parts List

No.	PART NAME
1	Hook
2	Beater
3	Wire Whip
4	Safety Guard
5	Bowl
6	Top Cover
7	Screw
8	Spring
9	Pin Shaft
10	Shifting Yoke
11	Cam-Gear Shifter
12	Plate-Shifter Index
13	Handle-Shifter
14	Handle Set
15	Turnset
16	Speed Control
17	Plug Attachment Hub
18	Attachment Hub
19	Spring
20	Circlips
21	Gear
22	Hood Ring
23	Circlips For Shaft
24	Planet Gear
25	Operating Shelf
26	Bearing
27	Oil Seal
28	Pin
29	Working Shaft
30	Declutch Shift Shaft
31	Spacer
32	Main Shaft
33	Nut
34	Top Batter Valve Cap
35	Flat Valve Cap
36	Bearing
37	Spacer-Lower
38	Super Machine Parts
39	Gear
40	Bushing
41	Sleeve
42	Gear
43	Gasket
44	Bearing
45	Bushing
46	Oil Seal
47	Body Housing
48	Bowl Hold Kits
49	Bowl Cradle
50	Spacer
51	Nut
52	Base
53	Bearing
54	Transmission Shaft Support
55	Key
56	Circlips For Shaft
57	Gear
58	Bushing
59	Front Housing
60	Worm Wheel
61	MARK
62	Case
63	Back Cover
64	Internal Gear
65	Screw
66	Seal Up Ring
67	Gear Shaft
68	Gear
69	Bushing
70	Gear
71	Gear
72	Gasket
73	Plug 1
74	Nut
75	Spring Washers
76	Bearing
77	Shaft Worm Gear
78	Key
79	Circlips For Shaft
80	Circlips For Shaft
81	Plug 2
82	Motor
83	Rubber Set
84	Green Button
85	Red Button
86	Crank Lever
87	Bowl Lift Lever
88	Connecting Rod
89	Spacer
90	Spring
91	Spacer

GENERAL® FOODSERVICE – RETAIL WARRANTY

GENERAL® LIMITED WARRANTY:

The Legacy Companies® warranty applies to all equipment that has been unaltered, properly installed and maintained in accordance with national and local codes and in accordance with the GENERAL® installation manuals.

GENERAL® products are warranted to the original purchaser to be free from defects in material and workmanship under normal use and service for a period of one (1) year from the date of purchase. Parts wear is not considered a defect. This warranty does not apply to equipment damaged, altered, or abused, accidentally or intentionally, modified by unqualified service personnel or with missing or altered serial name plates. GENERAL® agrees to repair or replace defective parts due to flaws in material or workmanship during the warranty period. Labor to repair or replace defective parts shall be warranted when and only performed by an authorized GENERAL® service agency. Travel over fifty (50) miles, holiday or overtime labor charges are not covered. Any use of any third-party or non GENERAL® replacement parts will void the warranty.

WARRANTY CLAIMS

All claims for GENERAL® products should include; model and serial number, proof of purchase, date of installation, authorized GENERAL® dealer, and all pertinent information supporting the existence of the alleged defect. Warranty registration must be completed and received within 10 days of installation for warranty activation. GENERAL®'s obligation under this warranty shall be limited to the repair or at the sole discretion of The Legacy Companies® management, the replacement of the unit. In the event of a failure please contact The Legacy Companies® Technical Service department at 877.368.2797 for diagnosis and instructions. GENERAL® will not be held responsible for spoilage of products, loss of sales or consequential damages.

WARRANTY EXCLUSIONS

GENERAL®'s sole obligation under this warranty is limited to the repair or replacement of the item subject to the additional limitations below. The warranty neither assumes nor authorizes any person to assume obligations other than those expressly covered by this warranty.

*COVERAGE LIMITATIONS:

This limited warranty does not cover equipment used for residential or non-commercial purposes. Nor does it cover parts and accessories not originally sold with or as a component of equipment.

*NO CONSEQUENTIAL DAMAGES:

GENERAL® will not be held responsible for economic loss or special, indirect, or consequential damage including with limitation; losses or damages arising from food or product spoilage.

*WARRANTY IS NOT TRANSFERABLE:

This warranty is not assignable and applies only to the original purchaser to whom the GENERAL® unit was delivered. Any such assignment or transfer shall void the warranties herein made and shall void all warranties express or implied, including any warranty of merchantability or fitness for a particular purpose.

*IMPROPER USAGE:

GENERAL® assumes no liability for parts or labor coverage for component failure or other damages resulting from improper usage or installation or failure to clean and/or maintain the product as set forth in the warranty packet provided with the unit.

*CONSEQUENTIAL DAMAGES:

GENERAL® is not responsible for the repair or replacement of any parts that its authorized servicer determines have been subjected after the date of manufacture due to improper maintenance (such as rust) alteration, neglect, abuse, misuse, accident, damage during transit or installation, fire, flood, vandalism, or Acts of God.

*IMPROPER ELECTRICAL CONNECTIONS:

GENERAL® is not responsible for the repair or replacement of failed or damaged components resulting from electrical power failure, the use of extension cords, low voltage or voltage drops to the unit.

*NO IMPLIED WARRANTY OF MERCHANTABILITY OR FITNESS FOR PARTICULAR PURPOSE:

There are no other warranties statutory, expressed or implied except the one (1) year repair or replacement. This warranty is exclusive and in lieu of all other warranties including implied and merchantability or fitness for a particular purpose. There are no other warranties which extend the description on the face hereof.

*OUTSIDE UNITED STATES:

This warranty does not apply to, and GENERAL® is not responsible for, any warranty claims made on products sold or used outside of North America or any territories of the United States.

RESIDENTIAL, FOOD TRUCK, MOBILE, AND OUTDOOR COMMERCIAL USE WARRANTY

*Residential, Food Truck, Mobile, and Outdoor customers in the Contiguous United States shall receive thirty (30) days of replacement warranty coverage from the original date of delivery; excluding all applicable shipping costs, duties, taxes, and fees provided by your authorized dealer following appropriate troubleshooting steps.