Vinyl Awning Window Installation Instructions

This installation guide assumes that a framework of studs (often called a buck frame or blocking) has already been properly fastened and sealed to the wall of the opening by a building professional. This type of work is commonly referred to as blocking-up an opening.

NOTE: *Inspect this window while unpacking* ***AND BEFORE*** *installation to ensure its proper operating condition*

Replacement / New Construction application with the use of a nailing flange

Note: window openings should always be non-load-bearing.

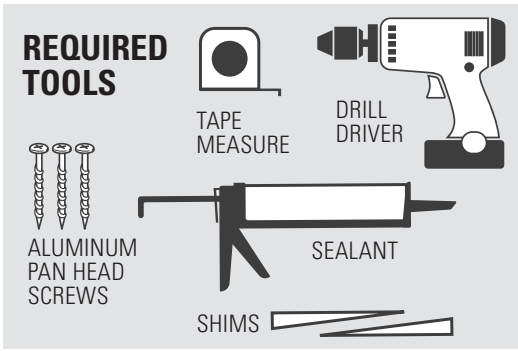

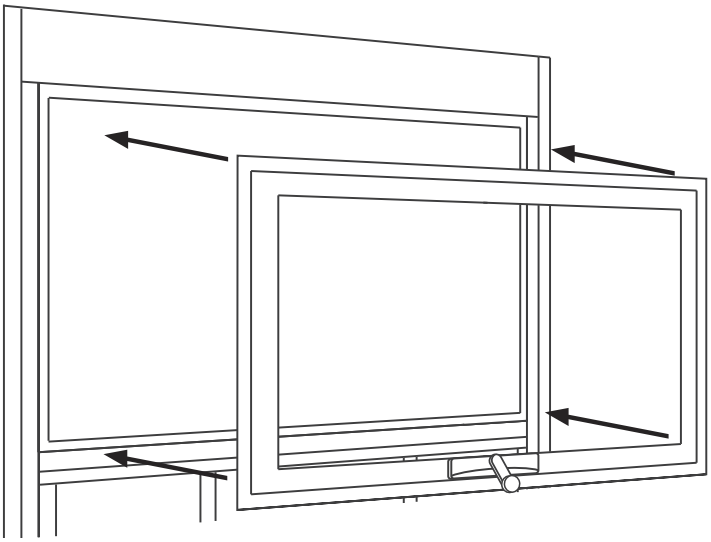

STEP 1. After the window opening has been blocked-up, place the window into opening making sure that the handle is tightened, and the window is closed.

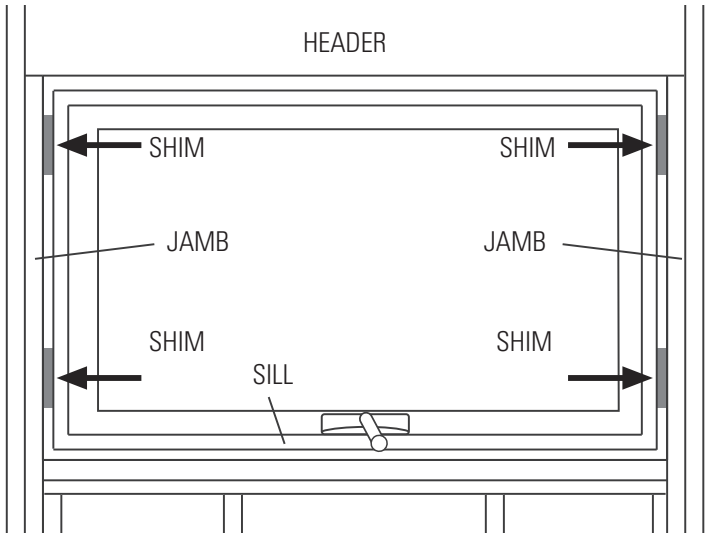

STEP 2. Ensure window is aligned and plumb by shimming sill and side jambs as necessary. Be sure to check both side-to-side and front-to-back for alignment and plumb. Shim spaces to be no more than 1/4" per side.

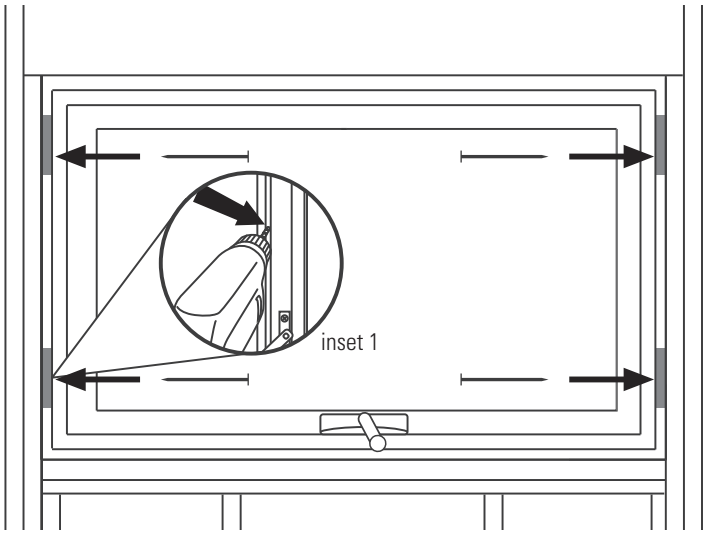

STEP 3. Secure window using four (4) pan head or round head wood screws (2 on each side) that are secured through the side wall installation channels (inset 1). If there aren't pre-punched, installation holes these can be drilled 4" to 6" from each corner. CAUTION: DO NOT screw through top header or bottom sill as this may distort the window and its operation.

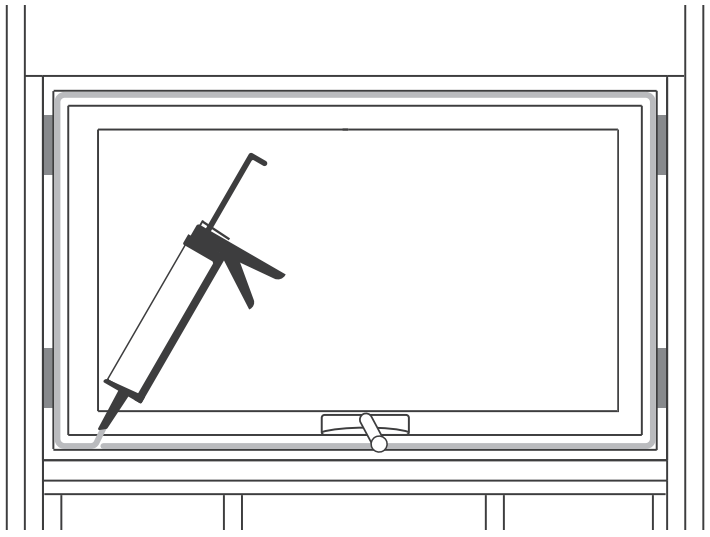

STEP 4. Apply silicone caulk (or other type of approved sealant) to the opening between the interior and exterior main frame and wall.

STEP 5. Finish interior/exterior trim as desired.