INSTALLATION GUIDE – Shoe Rack

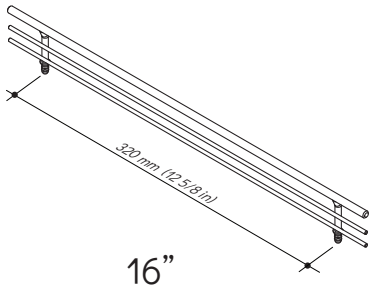

16”

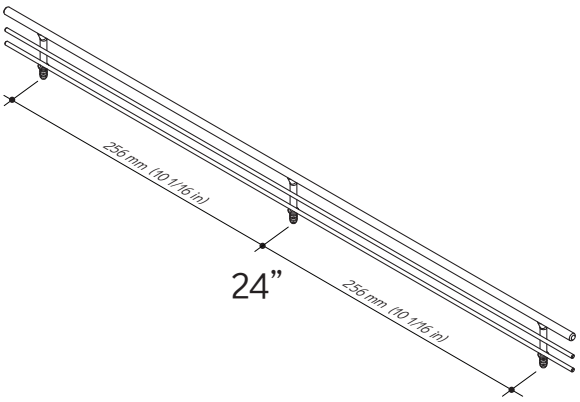

24”

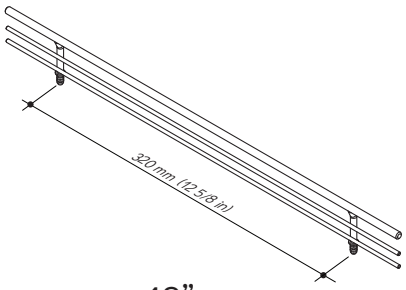

18”

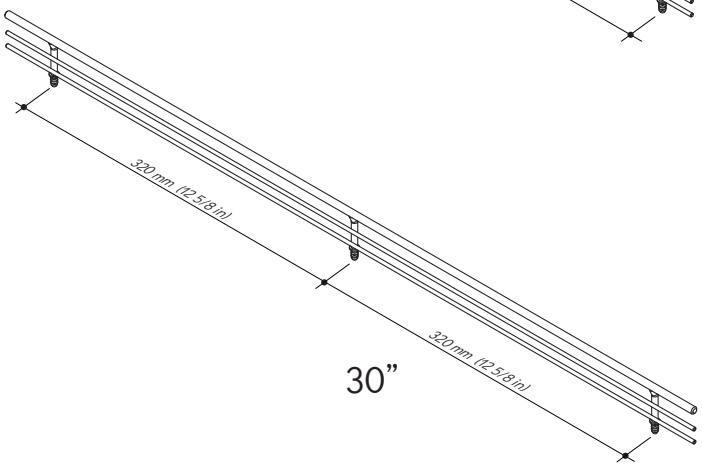

30”

- **Applies To:** TRC-H-SSR 16 / 18 / 24 / 30
- **Compatible With:** Angled or flat shoe shelves

Required Tools

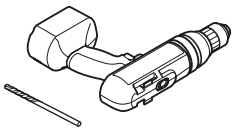

Drill with 5 mm bit

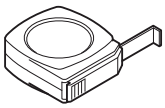

Tape measure

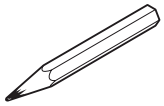

Pencil or marking tool

Installation Steps

1 Identify Components

- Shoe Rack rail (TRC-H-SSR series, width per model)
- Integrated insert rods (ϕ 5 mm)

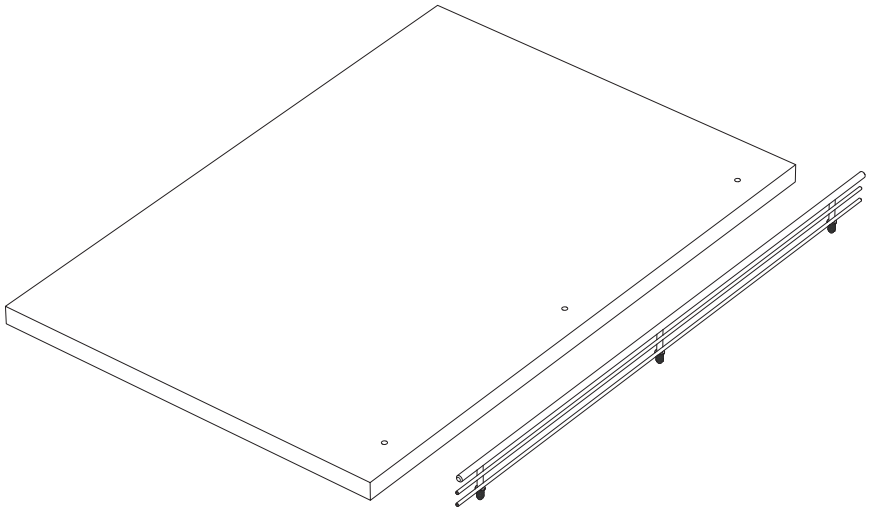

2 For Pre-Drilled Shelves

- Locate the pre-drilled holes along the front edge of the shoe shelf.
- Align the insert rods (ϕ 5 mm) with the holes.

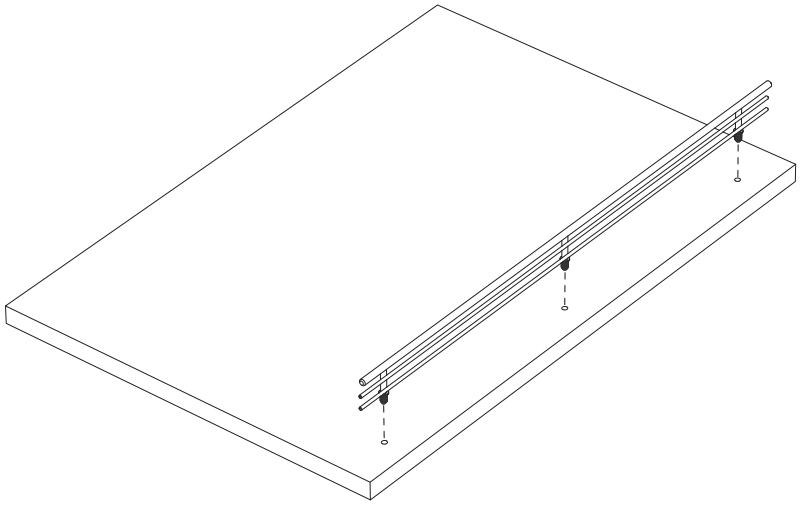

Installation Steps

- Press each rod into the holes until fully seated.

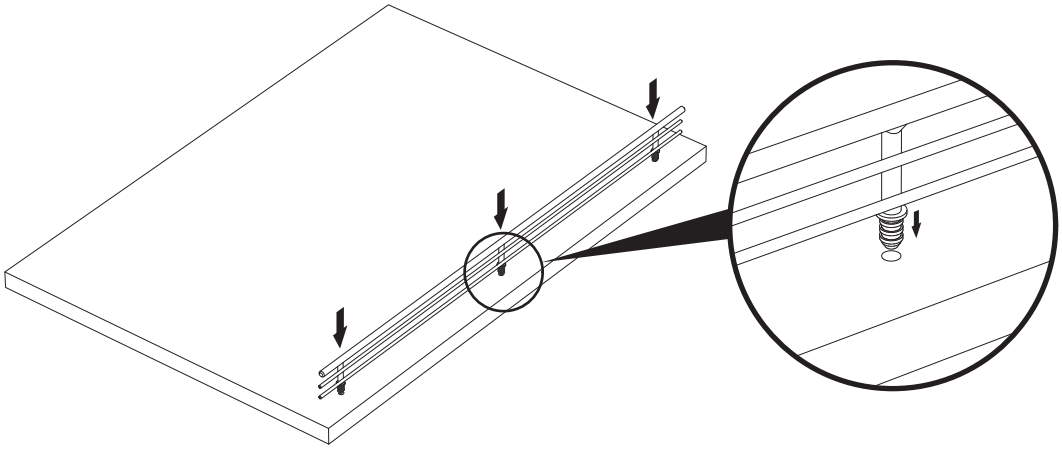

- Confirm the rail sits flush and parallel to the shelf front.

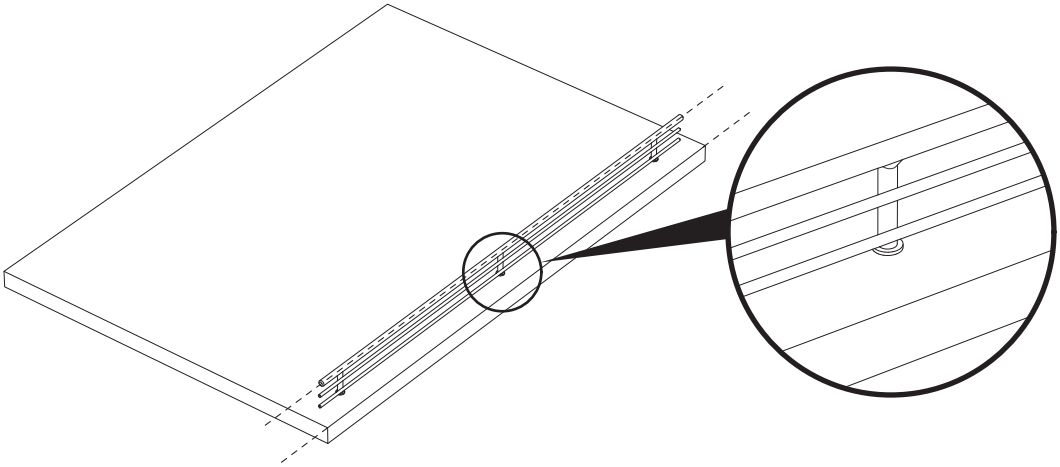

3 For Custom (Un-Drilled) Shelves

- Center the Shoe Rack along the front edge of the shelf.
- Mark the hole locations according to the **Shoe Rack model and drilling specifications**.

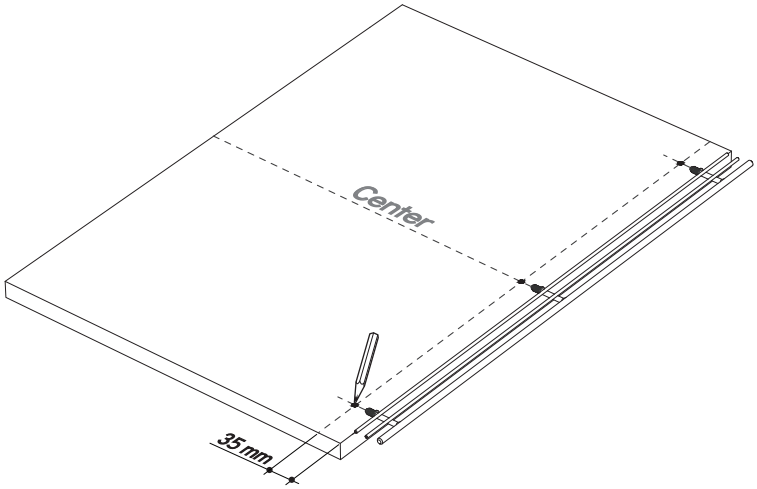

Installation Steps

- Drill with a **5 mm** bit to a depth of **9–10 mm.**

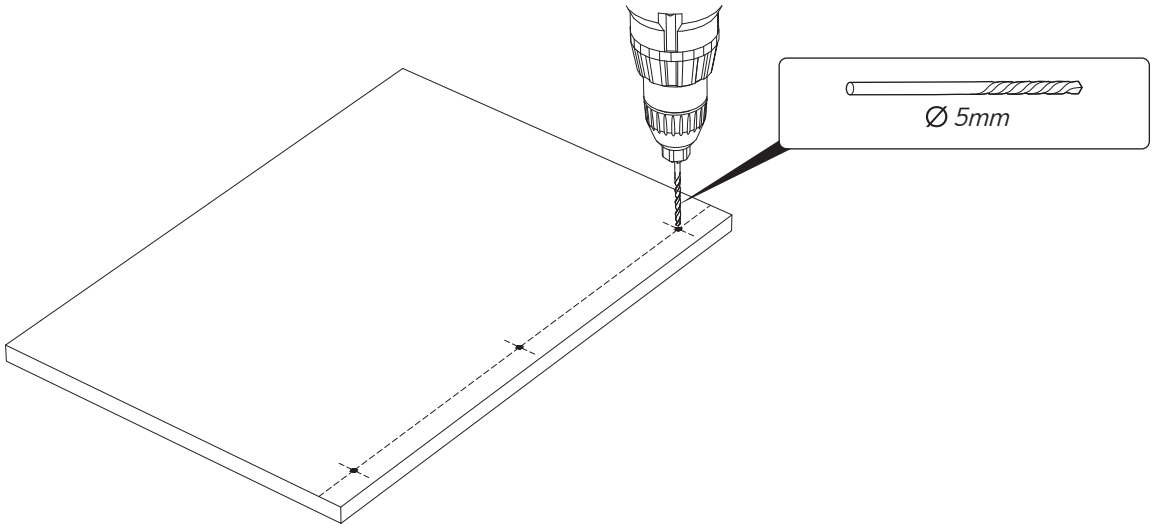

- Insert the rods and press firmly until fully seated.

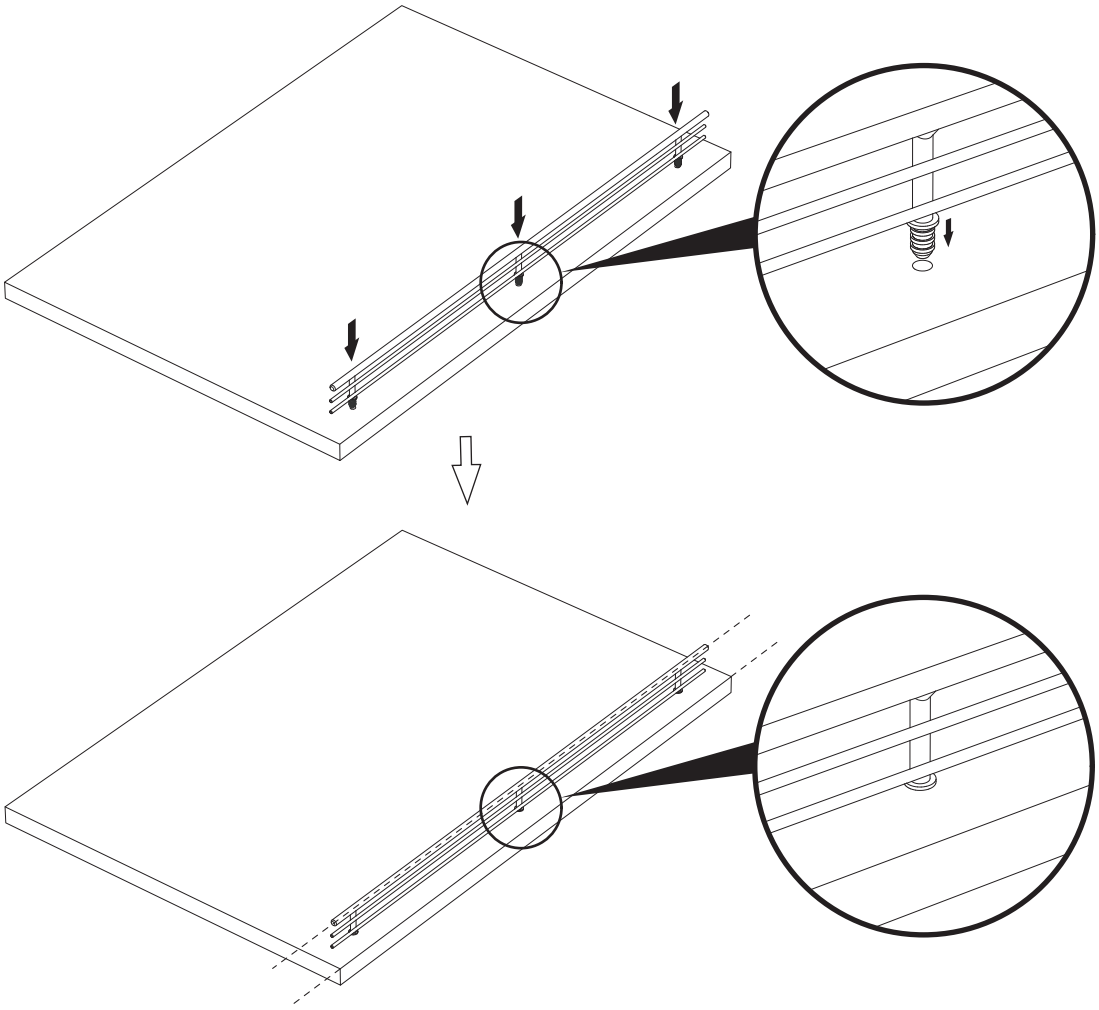

Installation Steps

4 Verify Alignment

- Ensure all rods are fully inserted and level.
- Apply light pressure at each connection point if adjustment is needed.
- The guard should sit firmly without movement.

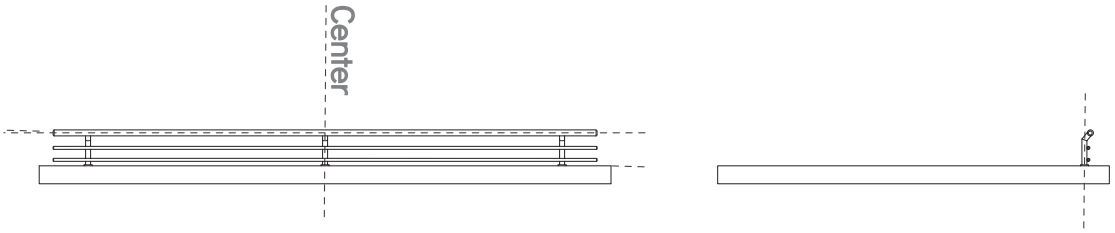

Font *Side*

5 Care & Maintenance

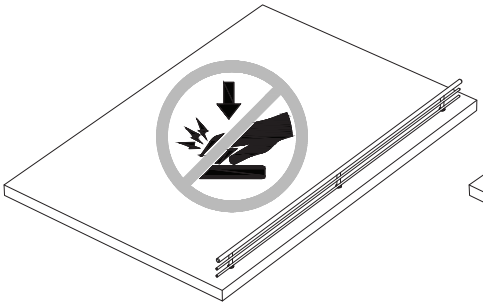

Avoid excessive force during installation.

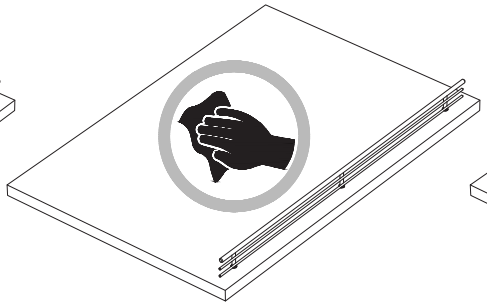

Clean with a soft cloth and mild cleaner only.

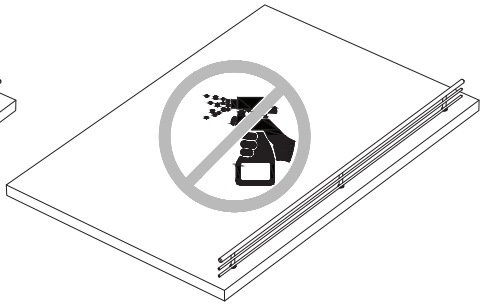

Do not use solvents or abrasives on plated finishes.

Notes:

- Shelves are not included with this product.
- Factory pre-drilled shelves will have hole positions based on the corresponding Shoe Rack model.
- For field installations, drill according to the specified measurements for accurate fit.