welcoming • sophisticated • inspiring

OPTION 1
(Semi-Recessed Sink)

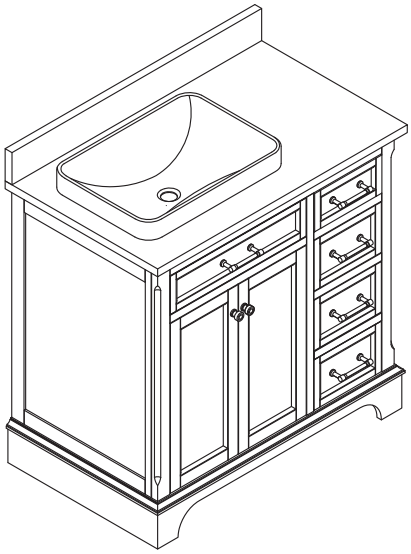

OR

OPTION 2
(Undermount Sink)

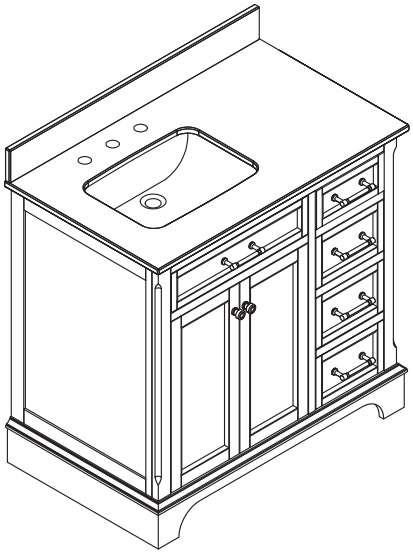

36-IN VANITY WITH TOP

ITEM #4767946; 4767947; 4767944; 4767945; 1028460; 1028448; 864222; 3839340; 864223; 3839339; 4767942; 4767943; 4767940; 4767941; 720434; 1028444; 720457; 3839338; 720445; 3839337; 720448; 1028445; 720437

MODEL #2026VA-36-242-926; 2026VA-36-242-926-SR; 2026VA-36-242-925; 2026VA-36-242-925-SR; 2026VA-36-242-906; 2026VA-36-242-905; 2026VA-36-242-901; 2026VA-36-242-901-SR; 2026VA-36-242-900; 2026VA-36-242-900-SR; 2026VA-36-201-926; 2026VA-36-201-926-SR; 2026VA-36-201-925; 2026VA-36-201-925-SR; 2026VA-36-201-906; 2026VA-36-201-905; 2026VA-36-201-901; 2026VA-36-201-901-SR; 2026VA-36-201-900; 2026VA-36-201-900-SR; 2026VA-36-200-906; 2026VA-36-200-905; 2026VA-36-200-901

ATTACH YOUR RECEIPT HERE

Serial Number_____ **Purchase Date**_____

Questions, problems, missing parts? Before returning to your retailer, call our customer service department at 1-866-439-9800, 8 a.m. - 8 p.m., EST, Monday - Sunday.

MODEL NUMBER	DESCRIPTION
2026VA-36-242-926	RVLND 36-IN VTY LGRY ECLT TOP
2026VA-36-242-926-SR	RVLND 36-IN VTY LGRY ECLT SR
2026VA-36-242-925	RVLND 36-IN VTY LGRY EC TOP
2026VA-36-242-925-SR	RVLND 36-IN VTY LGRY EC SR
2026VA-36-242-906	RVLND 36-IN VTY LGRY DK GY TOP
2026VA-36-242-905	RVLND 36-IN VTY LGRY TZO TOP
2026VA-36-242-901	RVLND 36-IN VTY LGRY WH TOP
2026VA-36-242-901-SR	RVLND 36-IN VTY LGRY WH SR
2026VA-36-242-900	RVLND 36-IN VTY LGRY CAR TOP
2026VA-36-242-900-SR	RVLND 36-IN VTY LGRY CAR SR
2026VA-36-201-926	RVLND 36-IN VTY WHT ECLT TOP
2026VA-36-201-926-SR	RVLND 36-IN VTY WHT ECLT SR
2026VA-36-201-925	RVLND 36-IN VTY WHT EC TOP
2026VA-36-201-925-SR	RVLND 36-IN VTY WHT EC SR
2026VA-36-201-906	RVLND 36-IN VTY WHT DK GY TOP
2026VA-36-201-905	RVLND 36-IN VTY WHT TZO TOP
2026VA-36-201-901	RVLND 36-IN VTY WHT WH TOP
2026VA-36-201-901-SR	RVLND 36-IN VTY WHT WH SR
2026VA-36-201-900	RVLND 36-IN VTY WHT CAR TOP
2026VA-36-201-900-SR	RVLND 36-IN VTY WHT CAR SR
2026VA-36-200-906	RVLND 36-IN VTY DGRY DK GY TOP
2026VA-36-200-905	RVLND 36-IN VTY DGRY TZO TOP
2026VA-36-200-901	RVLND 36-IN VTY DGRY WH TOP

TABLE OF CONTENTS FOR OPTION 1 (Semi-Recessed Sink)

Package Contents....4
Hardware Contents....4
Safety Information....4
Preparation....5
Assembly or Installation Instructions....5
Care and Maintenance....11
Warranty....11
Replacement Parts List....12

TABLE OF CONTENTS FOR OPTION 2 (Undermount Sink)

Package Contents....14
Hardware Contents....14
Safety Information....14
Preparation....15
Assembly or Installation Instructions....15
Care and Maintenance....21
Warranty....21
Replacement Parts List....22

PACKAGE CONTENTS (Semi-Recessed Sink)

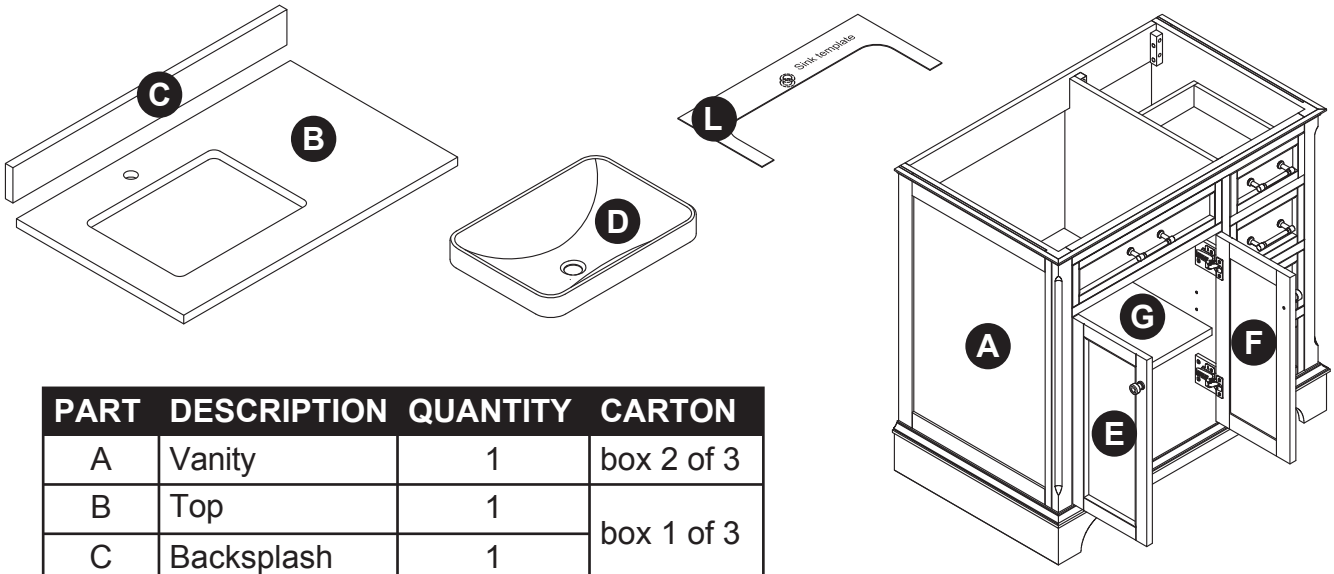

PART	DESCRIPTION	QUANTITY	CARTON
A	Vanity	1	box 2 of 3
B	Top	1	box 1 of 3
C	Backsplash	1	
D	Sink	1	box 3 of 3
E	Left Door (preassembled to vanity (A))	1	box 2 of 3
F	Right Door (preassembled to vanity (A))	1	
G	Shelf	1	
L	Sink Template	1	box 1 of 3

HARDWARE CONTENTS (NOT SHOWN ACTUAL SIZE)

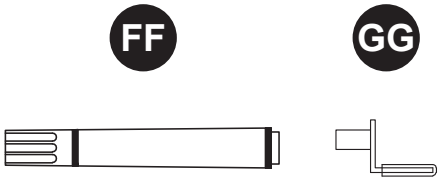

Touch-up Pen
Qty. 1

Shelf Pin
Qty. 4

SAFETY INFORMATION

Please read and understand this entire manual before attempting to assemble, operate or install the product.

WARNING

• Some steps are more easily handled with two adults.

CAUTION

• Use care when assembling the vanity, take your time and follow the assembly instructions closely.
• Weight capacity for shelf is 10 lb.

KEEP THESE INSTRUCTIONS FOR FUTURE REFERENCE.

PREPARATION

Before beginning assembly of product, make sure all parts are present. Compare parts with package contents list and hardware contents list. If any part is missing or damaged, do not attempt to assemble the product.

Estimated Installation Time: 45 minutes (24 hours for silicone caulk to dry).

Tools Required for Installation (not included): Phillips screwdriver, utility knife or scissors, silicone caulk, power drill with drill bit, measuring tape, level

INSTALLATION INSTRUCTIONS (Semi-Recessed Sink)

1. To remove drawers from vanity base (A), fully extend drawers and locate the plastic levers on left and right sides of the metal glide tracks. Push the plastic levers, on both sides, at the same time, This will disengage the drawer box from the glides. Gently lift up on the drawer to remove it from the glide tracks. Set aside as these will be re-installed.

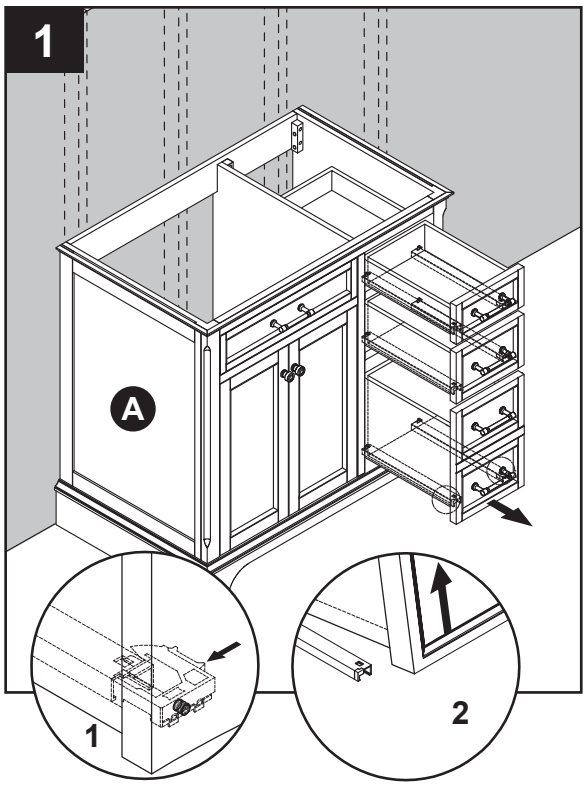

2. Clean area where the vanity (A) will be permanently located prior to beginning installation, ensuring the vanity (A) will not interfere with any water supply and drain lines once mounted.
   Locate wall studs and mark locations. With the help of another adult, place completed vanity cabinet assembly in its final location. Adjust the height of the vanity cabinet (A) by twisting the adjustable leveler foot pins on the bottom of each leg. Twist clockwise to decrease height or twist counter-clockwise to increase vanity height.

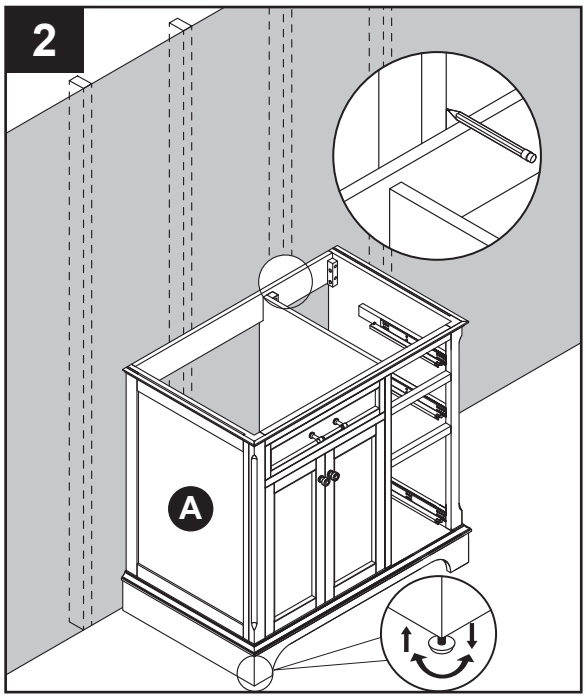

3. Using hardware appropriate for your wall type (not included), secure vanity cabinet (A) to two wall studs anywhere through the vanity mounting plates. Be careful not to disturb any electrical or water lines that may be concealed in the wall.

WARNING
Vanity (A) **MUST** be secured to the wall.

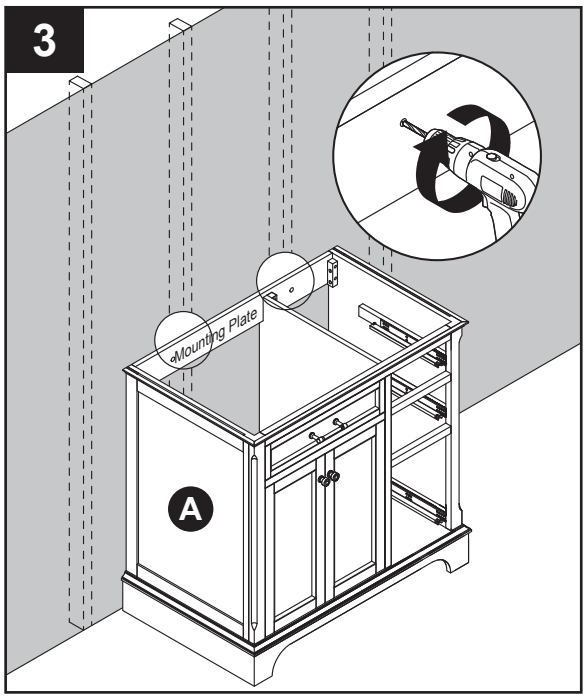

4. Take out the top (B) and backsplash (C) according to the steps indicated by the drawings on the right, and place them face up onto a scratch free surface such as a foam sheet that came in the packaging.

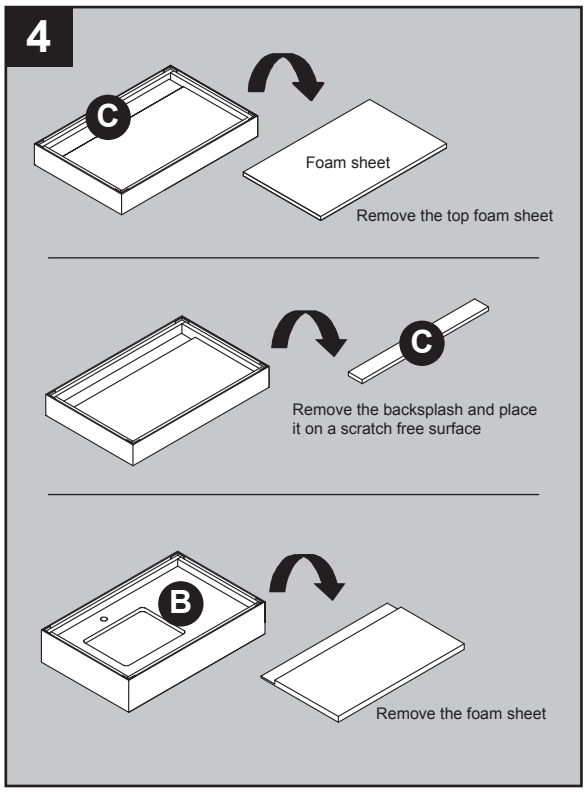

Note: At this stage it may be easier to install the faucet and drain kit (not included) to top (B) per the manufacturer's instructions, before moving on to Step 5.

5. Apply stain free silicone caulk (not included) to the top edge of vanity (A). With the help of another adult, gently lower top (B) onto the vanity (A). Wipe away any excess caulk with a soft cloth, and wait approximately 24 hours for it to dry.

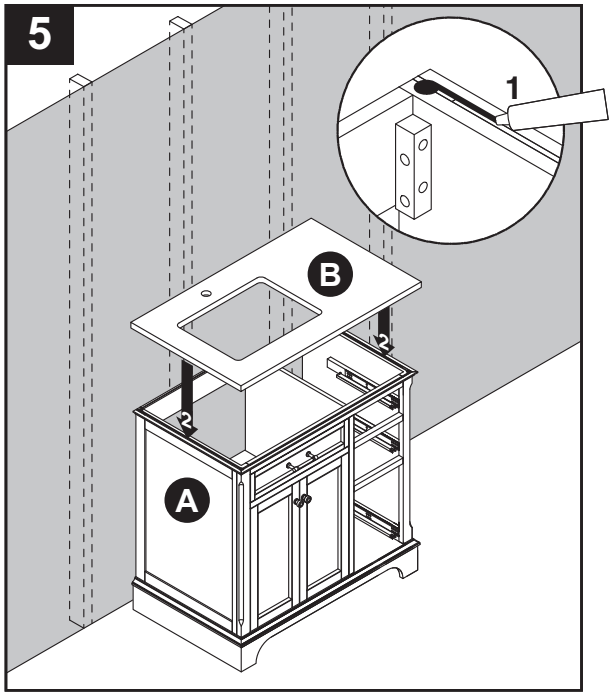

6. Put the sink template (L) on the top (B). The hole in the cardboard needs to be aligned with the hole in the stone top. Make sure the sink template and stone top are flush along the back edge.

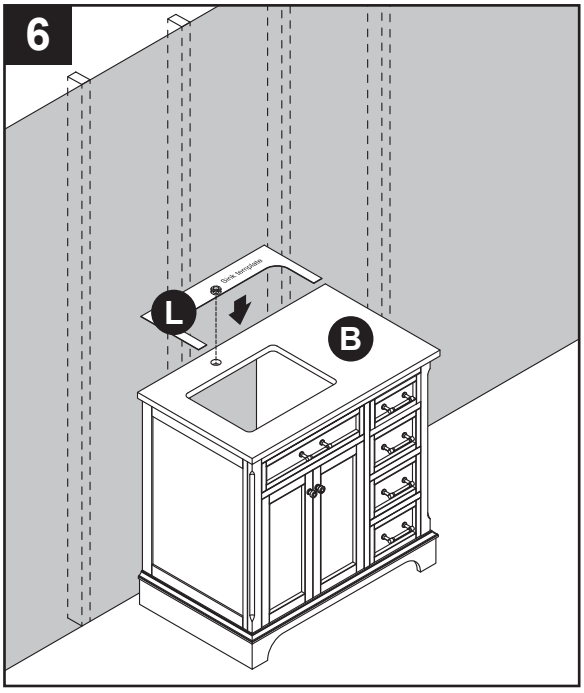

7. Apply a thin bead of silicone caulk (not included) onto the stone top close to the edge of the sink cut out as pictured.

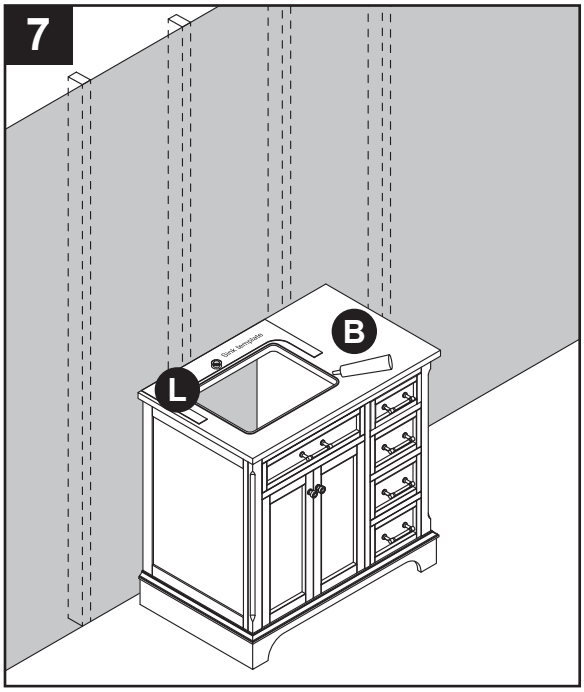

8. With the help of another adult, Gently lower the sink onto the stone top using even pressure to set the sink properly.

   Make sure the sink over-flow hole is at the front of wood cabinet.
   If some silicone caulk has over-flowed please clean it up at that time with water.

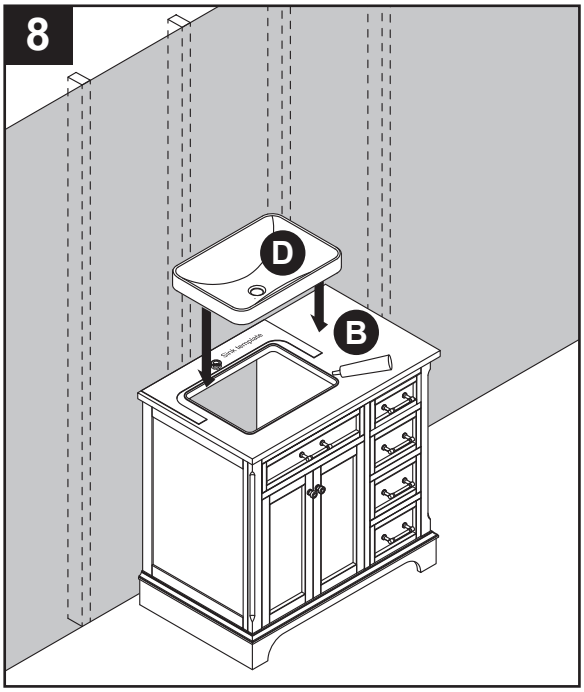

9. To re-install drawers into vanity (A). Please fully extend metal glide tracks, gently lower and slide drawer box into rear glide catch, then, lower drawer box down to completely rest on extended glides, push plastic levers to lock the drawer box in place.
   Repeat for remaining drawers.
   Note: To adjust the drawer box height. Please spin the adjustment wheel to the left to raise the drawer box or spin the adjustment wheel to the right to lower the drawer box. You can adjust the left and right side glide heights independently in order to find the drawers best alignment position.

   CAUTION
   DO NOT force drawer or damage to glide may occur. If drawer does not slide in with ease, remove and try again from the start.

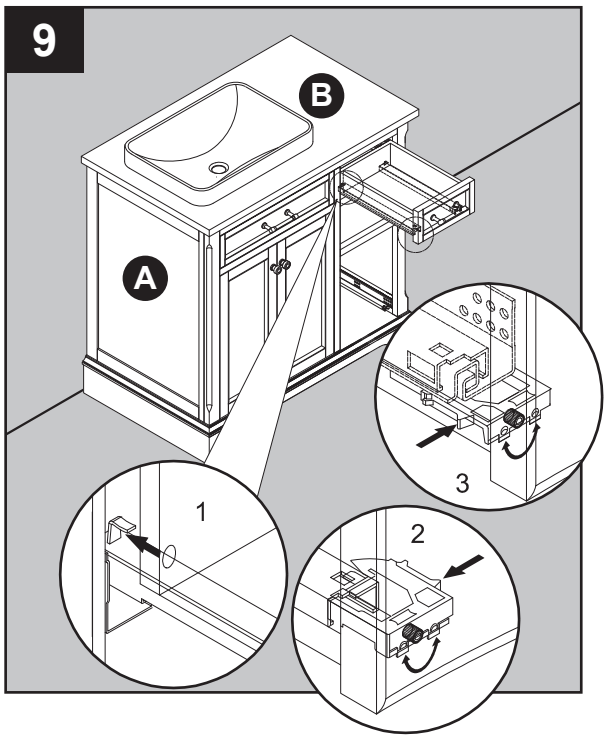

10. Insert shelf pins (GG) at desired height, ensuring they are level. Place shelf (G) on top of shelf pins (GG).

Hardware Used

GG Shelf Pin 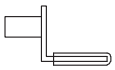 x 4

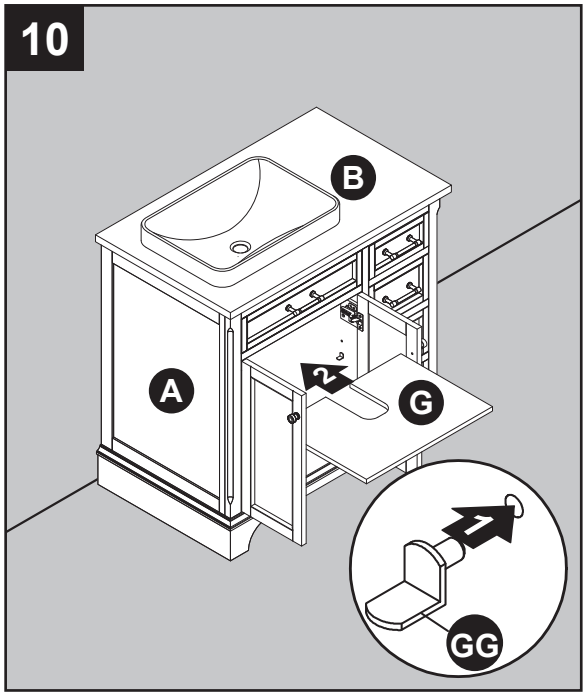

11. If you need to adjust the doors, do so in the following manner.
    To adjust door up or down, loosen screws (a) on both hinges, adjust door, and retighten screws.
    To adjust door left or right, turn screws (b) on both hinges, in and out.
    To adjust door in or out, loosen screws (c) on both hinges, adjust door, and retighten screws.

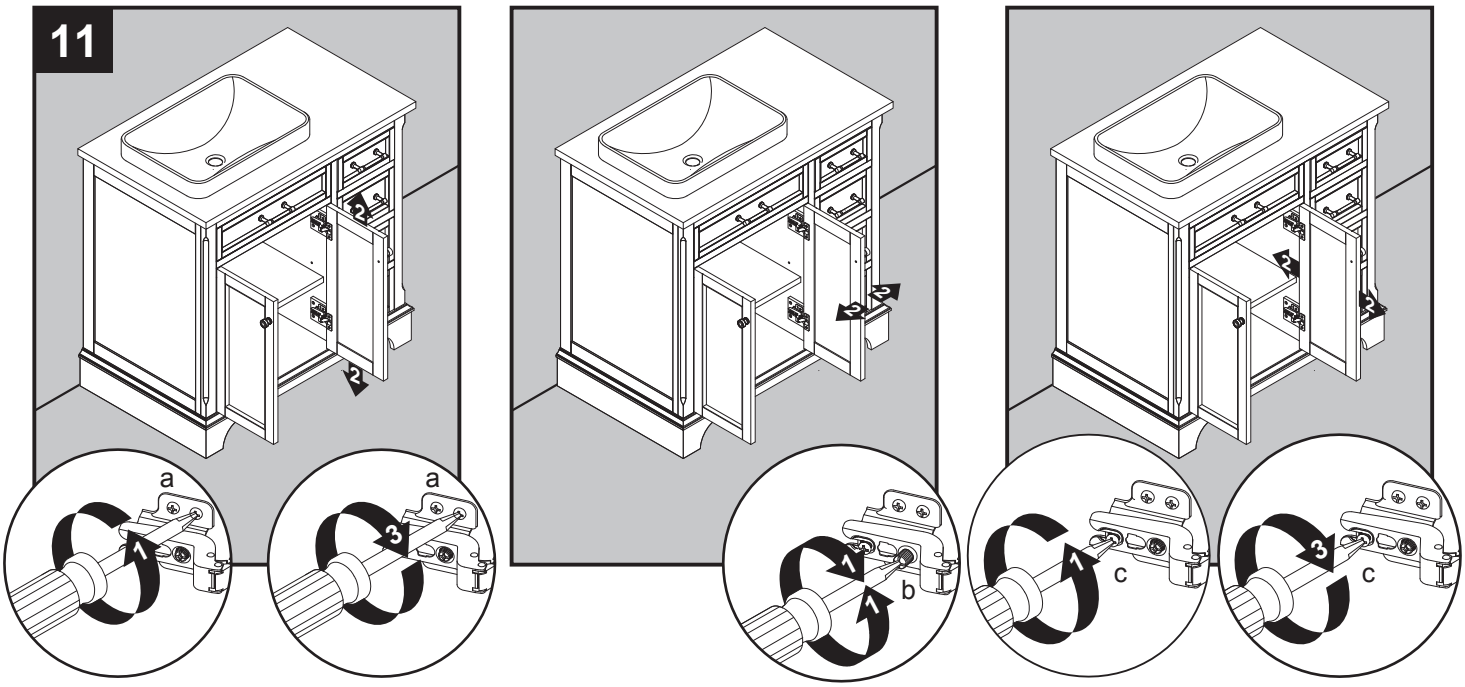

12. Apply silicone caulk (not included) to unpolished side and bottom of backsplash (C). Position backsplash (C) on top (B) and against wall. Clean any excess caulk before allowing to dry.

    Assembly is now complete. Install desired faucet and drain assemblies (neither included) per the manufacturers' instructions to complete the installation.

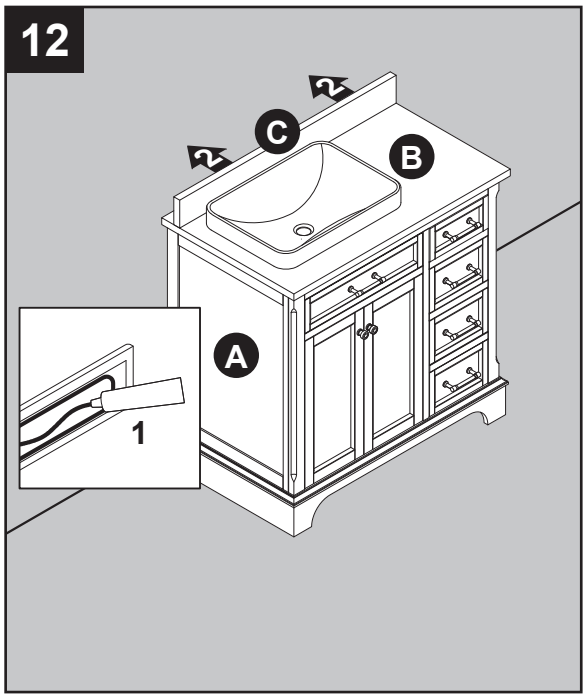

CARE AND MAINTENANCE

- Dust the vanity regularly with a soft, non-lint producing cloth or household dusting product.
- You can clean the vanity with a gentle, non-abrasive household cleaner.
- Make sure to dry the wood immediately with a soft cloth or towel.
- The stone top can be cleaned using standard marble cleaning agents available at your local supplier.
- Tips for using touch-up pen (FF): For scratches, stroke in direction of scratch. Rub off excess colorant promptly with a soft cloth.

IMPORTANT

- Shade variations and patterns are an inherent characteristic of stone (e.g. granite, marble, engineered stone). Stone tops will vary from product to product. Use caution placing items such as soap or any fragranced material on the stone surface. Use a soap dish, coaster or similar item to protect the surface if placing any soap or fragranced products on the stone.
- If soap or fragranced products come in contact with the stone top, rinse the surface with water and dry using a soft non-abrasive cloth.
- **WARNING:** Must use cleaning agents safe for stone. Check your cleaning agents use restrictions before using on any stone. Damage to the stone may result. Vanity Manufacturer not responsible for damage caused by improper cleaning agents or soaps used. Warranty will not cover damage caused by the use of improper soaps or cleaning agents.
- **DO NOT** use products to clean the stone top that contain acetone, lemon, vinegar or other acids as these may cause damage to the stone surface.
- Periodically reseal the stone top using an appropriate stone sealer available from your local home store. Follow the manufacturer’s directions on how to apply.

WARRANTY

The manufacturer warrants this item against defects in materials and workmanship for a period of one (1) year from the date of original retail purchase. This warranty applies only to the original purchaser. This warranty does not apply to any damage on the product by accident, misuse, or modified, improper installation or by affixing accessories not produced by the manufacturer. The manufacturer is not accountable whatsoever for product installation during the warranty period. There is no further expressed warranty. The manufacturer shall not be legally responsible for incidental, consequential or special damages arising at or in connection with product use or performance except as may otherwise be accorded by law. The manufacturer disclaims any and all implied warranties.

REPLACEMENT PARTS LIST FOR 2026VA-36-201-SR (Semi-Recessed Sink)

For replacement parts, call our customer service department at 1-866-439-9800, 8 a.m. - 8 p.m., EST, Monday - Sunday.

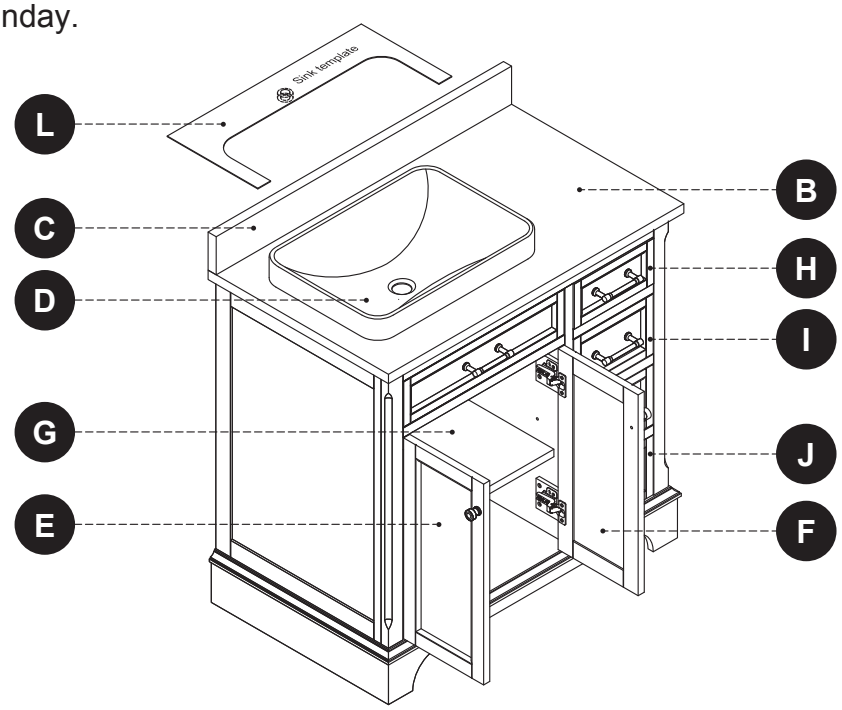

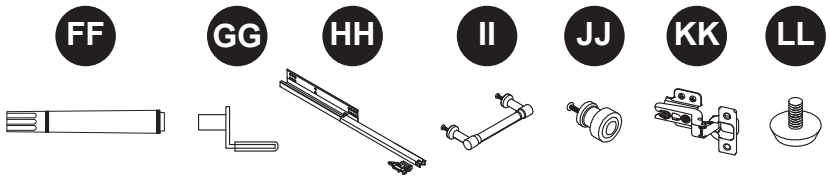

PART	DESCRIPTION	PART#
B	Complete Set 36" Carrara Marble Top	3500VT-36-900
	Complete Set 36" Engineered White Top	3500VT-36-901
	Complete Set 36" Engineered Carrara Top	3500VT-36-925
	Complete Set 36" Engineered Calacatta Top	3500VT-36-926
C	36" Carrara Marble Backsplash	PUBS-25-900-36
	36" Engineered White Backsplash	PUBS-25-901-36
	36" Engineered Carrara Backsplash	PUBS-25-925-36
	36" Engineered Calacatta Backsplash	PUBS-25-926-36
D	Sink	SN047B
E	Left Door	2026VB-36-201-001/002
F	Right Door	
G	Shelf	2026VB-36-201-003
H	Small Drawer Front	2026VB-36-201-004
I	Middle Drawer Front	2026VB-36-201-005
J	Large Drawer Front	2026VB-36-201-006
L	Sink Template	SN047B-TEMPLATE
FF	Touch-up Pen	OF-0010
GG	Shelf pin	B1044
HH	Glide Track Set	PUDTC-12X3-HANDLE
II	Pull (with screw)	CF-96-004-BN
JJ	Knob (with screw)	CF-D25-005-BN
KK	Hinge	C-90-107
LL	Leveler	T-1007

REPLACEMENT PARTS LIST FOR 2026VA-36-242-SR (Semi-Recessed Sink)

For replacement parts, call our customer service department at 1-866-439-9800, 8 a.m. - 8 p.m., EST, Monday - Sunday.

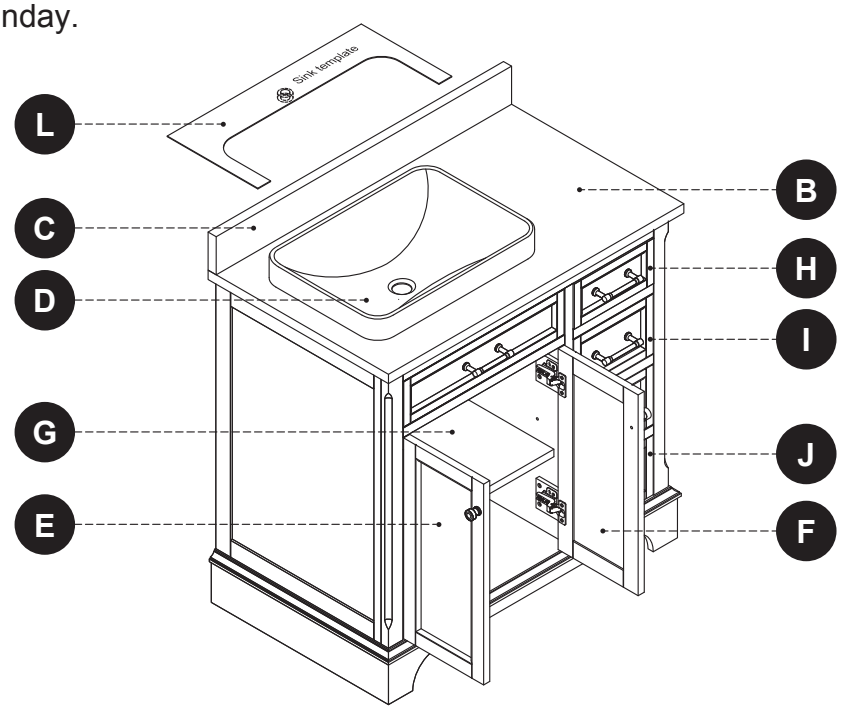

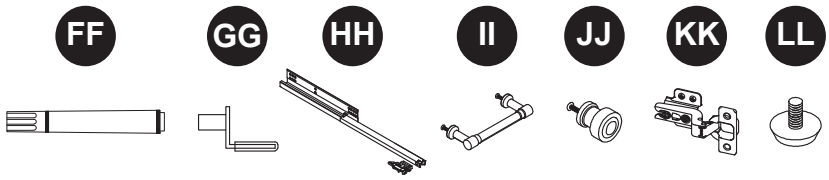

PART	DESCRIPTION	PART#
B	Complete Set 36" Carrara Marble Top	3500VT-36-900
	Complete Set 36" Engineered White Top	3500VT-36-901
	Complete Set 36" Engineered Carrara Top	3500VT-36-925
	Complete Set 36" Engineered Calacatta Top	3500VT-36-926
C	36" Carrara Marble Backsplash	PUBS-25-900-36
	36" Engineered White Backsplash	PUBS-25-901-36
	36" Engineered Carrara Backsplash	PUBS-25-925-36
	36" Engineered Calacatta Backsplash	PUBS-25-926-36
D	Sink	SN047B
E	Left Door	2026VB-36-242-001/002
F	Right Door	
G	Shelf	2026VB-36-242-003
H	Small Drawer Front	2026VB-36-242-004
I	Middle Drawer Front	2026VB-36-242-005
J	Large Drawer Front	2026VB-36-242-006
L	Sink Template	SN047B-TEMPLATE
FF	Touch-up Pen	OF-0120R
GG	Shelf pin	B1044
HH	Glide Track Set	PUDTC-12X3-HANDLE
II	Pull (with screw)	CF-96-004-BN
JJ	Knob (with screw)	CF-D25-005-BN
KK	Hinge	C-90-107
LL	Leveler	T-1007

PACKAGE CONTENTS (Undermount Sink)

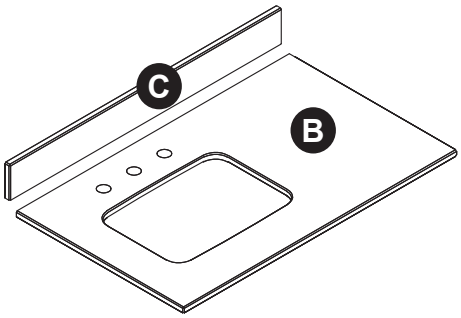

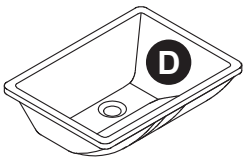

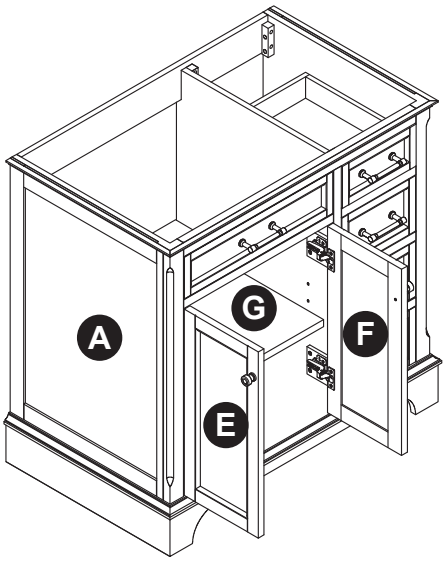

PART	DESCRIPTION	QUANTITY	CARTON
A	Vanity	1	box 2 of 3
B	Top	1	box 1 of 3
C	Backsplash	1	
D	Sink	1	box 3 of 3
E	Left Door (preassembled to vanity (A))	1	box 2 of 3
F	Right Door (preassembled to vanity (A))	1	
G	Shelf	1	

HARDWARE CONTENTS (NOT SHOWN ACTUAL SIZE)

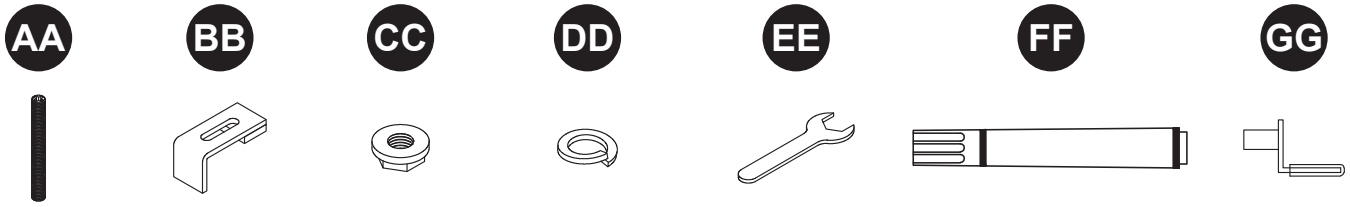

Bolt	Sink Bracket	Nut	Lock Washer	Wrench	Touch-up Pen	Shelf Pin
Qty. 4	Qty. 4	Qty. 4	Qty. 4	Qty. 1	Qty. 1	Qty. 4

SAFETY INFORMATION

Please read and understand this entire manual before attempting to assemble, operate or install the product.

WARNING

• Some steps are more easily handled with two adults.

CAUTION

• Use care when assembling the vanity, take your time and follow the assembly instructions closely.
• Weight capacity for shelf is 10 lb.

KEEP THESE INSTRUCTIONS FOR FUTURE REFERENCE.

PREPARATION

Before beginning assembly of product, make sure all parts are present. Compare parts with package contents list and hardware contents list. If any part is missing or damaged, do not attempt to assemble the product.

Estimated Installation Time: 45 minutes (24 hours for silicone caulk to dry).

Tools Required for Installation (not included): Phillips screwdriver, utility knife or scissors, silicone caulk, power drill with drill bit, measuring tape, level

INSTALLATION INSTRUCTIONS (Undermount Sink)

1. To remove drawers from vanity base (A), fully extend drawers and locate the plastic levers on left and right sides of the metal glide tracks. Push the plastic levers, on both sides, at the same time, This will disengage the drawer box from the glides. Gently lift up on the drawer to remove it from the glide tracks. Set aside as these will be re-installed.

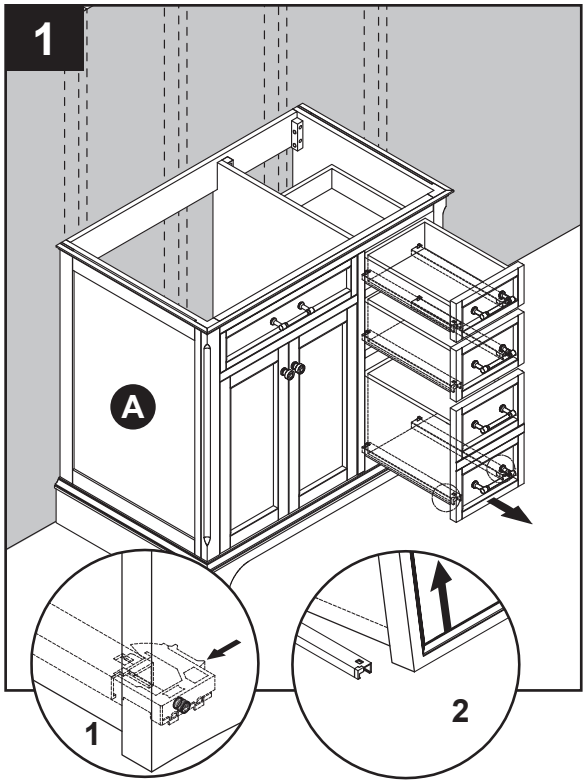

2. Clean area where the vanity (A) will be permanently located prior to beginning installation, ensuring the vanity (A) will not interfere with any water supply and drain lines once mounted.
   Locate wall studs and mark locations. With the help of another adult, place completed vanity cabinet assembly in its final location. Adjust the height of the vanity cabinet (A) by twisting the adjustable leveler foot pins on the bottom of each leg. Twist clockwise to decrease height or twist counter-clockwise to increase vanity height.

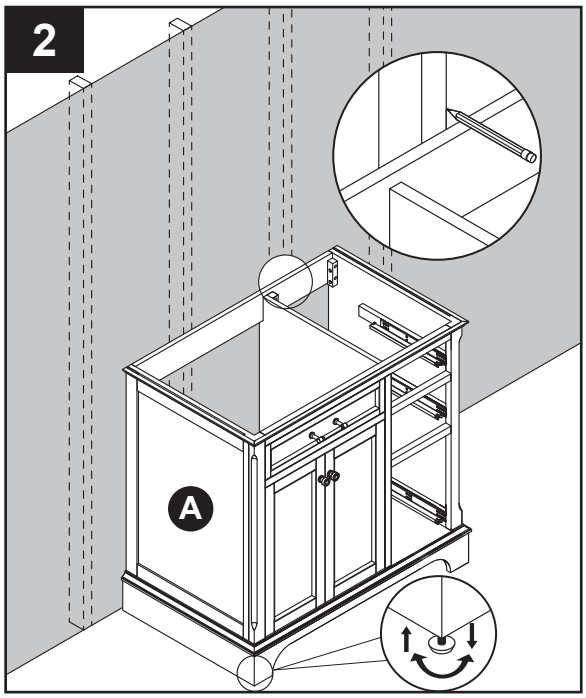

3. Using hardware appropriate for your wall type (not included), secure vanity cabinet (A) to two wall studs anywhere through the vanity mounting plates. Be careful not to disturb any electrical or water lines that may be concealed in the wall.

WARNING
Vanity (A) **MUST** be secured to the wall.

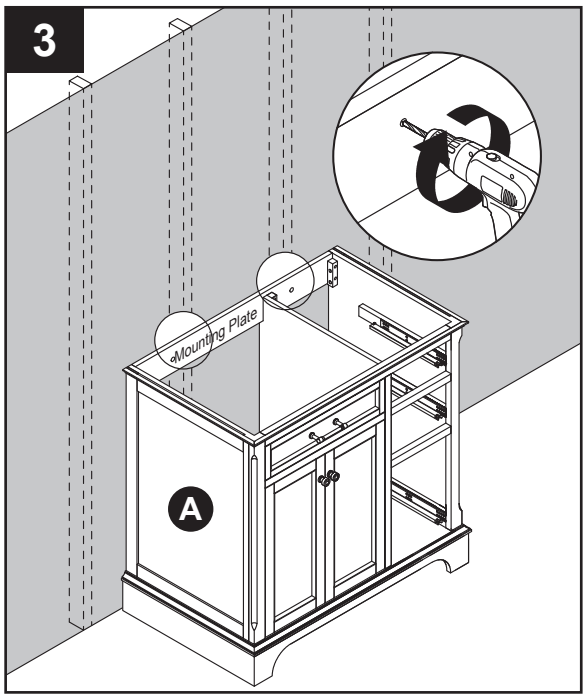

4. Take out the top (B) and backsplash (C) according to the steps indicated by the drawings on the right, and place them face down onto a scratch free surface such as a foam sheet that came in the packaging.

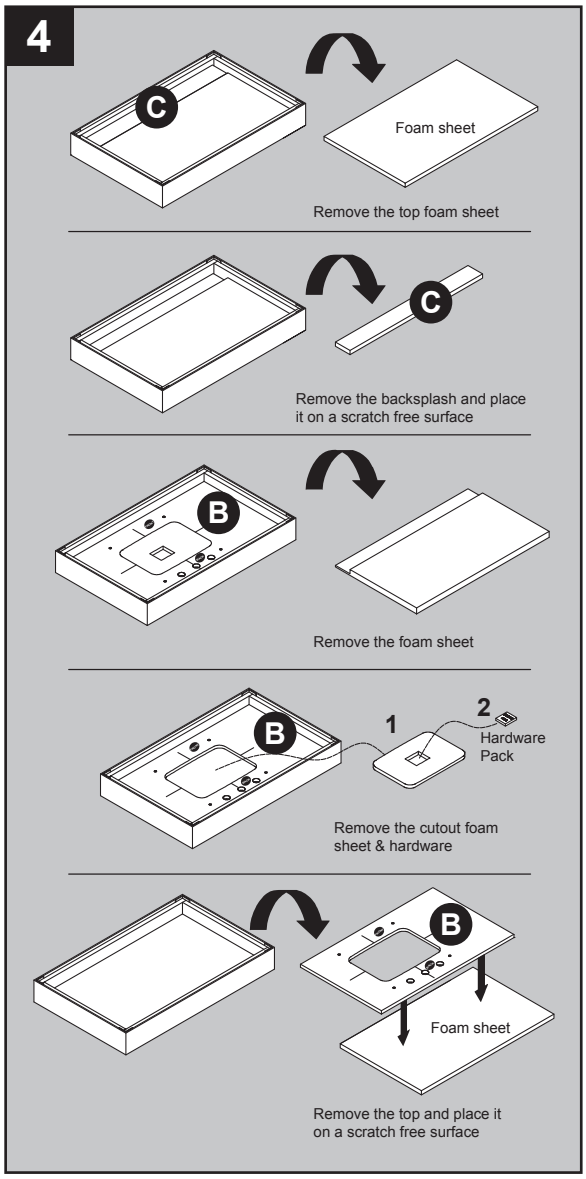

5. Apply silicone caulk (not included) to the top edge of sink (D). With the help of another adult, lower the sink onto the back side of the stone top.

   Make sure the sink over-flow hole is facing the front of stone top.
   Be sure to align the sink well with the stone top cut out allowing for equal stone overhang on the front, back and sides of the ceramic sink (D).

   Note: To install the sink onto the top correctly, ensure that the two "BACK" stamps on the sink and the top are aligned on the same sides. Use the guide lines marked on the sink and bottom side of stone top to assist with sink location.

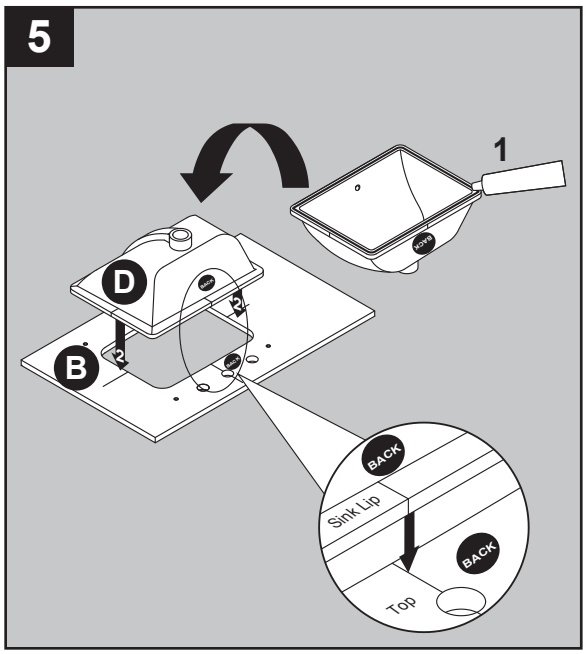

6. Screw bolts (AA) into the threaded holes of stone top (B).

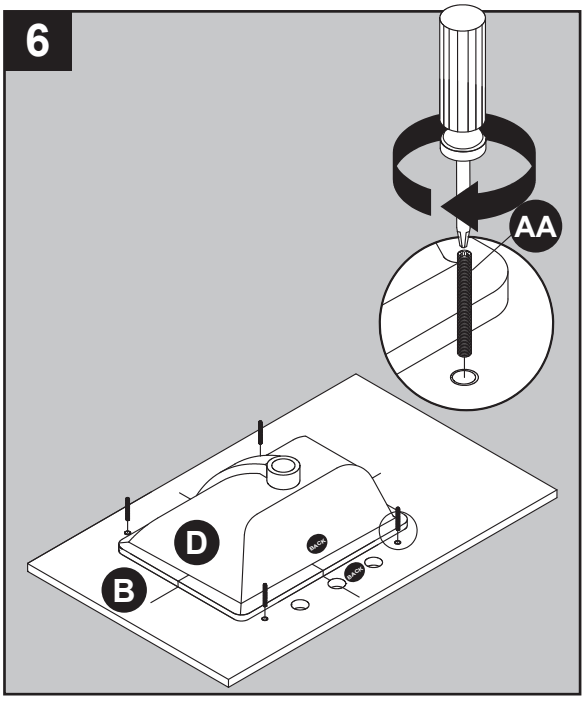

Hardware Used

AA	Bolt		x 4

7. Lower the sink brackets (BB) over the bolts (AA) and allow to rest on the sink lip. Adjust location of bracket to firmly grasp sink lip. Lower lock washers (DD) over bolts (AA) and secure with nuts (CC). Hand tighten nuts (CC) with included wrench (EE).
   DO NOT OVER TIGHTEN!
   Tip: Check that the sink placement is well centered front to back and side to side of the stone top cut out before allowing the silicone caulk to dry. If the sink is not centered well unscrew sink clamps, re-adjust the sink position and re-tighten the sink brackets.

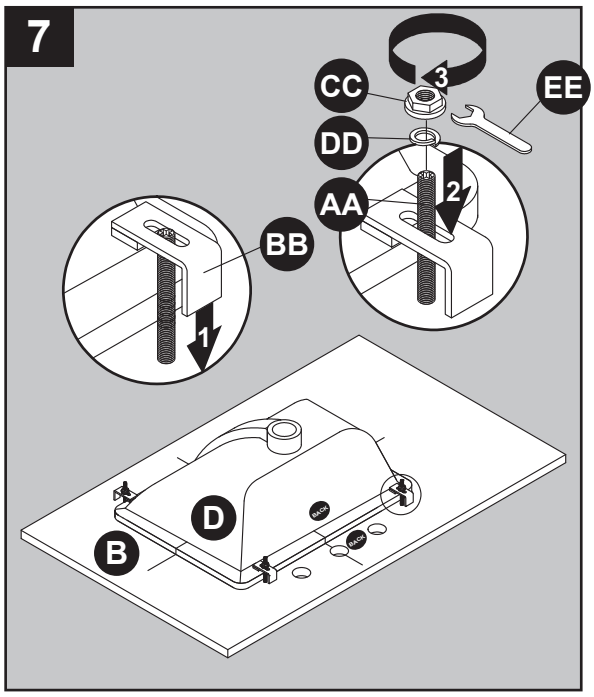

Hardware Used

BB	Sink bracket	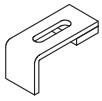	x 4
CC	Nut		x 4
DD	Lock Washer		x 4
EE	Wrench		x 1

Helpful tip: it may be easier to install your choice of faucet (not included) before securing the vanity top (B) to vanity base (A).

8. To install the top (B) to the vanity (A).
   Apply silicone caulk to the top edge of the wood cabinet. With the help of another adult, gently lower the stone top with assembled sink onto the cabinet. Make sure the stone top is flush with the back side of the wood cabinet and the stone overhang is equal on both sides over the wood cabinet left and right side walls. Remove any excess caulk before allowing to dry.

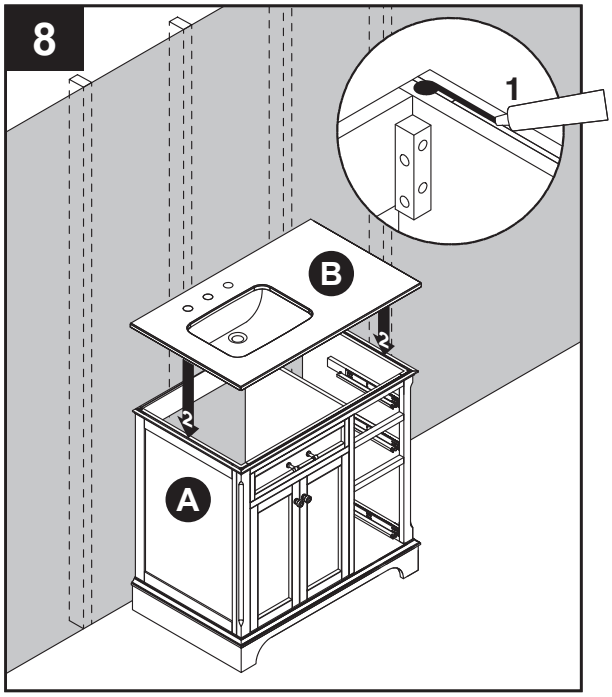

9. To re-install drawers into vanity (A). Please fully extend metal glide tracks, gently lower and slide drawer box into rear glide catch, then, lower drawer box down to completely rest on extended glides, push plastic levers to lock the drawer box in place.
   Repeat for remaining drawers.
   Note: To adjust the drawer box height. Please spin the adjustment wheel to the left to raise the drawer box or spin the adjustment wheel to the right to lower the drawer box. You can adjust the left and right side glide heights independently in order to find the drawers best alignment position.

   CAUTION
   DO NOT force drawer or damage to glide may occur. If drawer does not slide in with ease, remove and try again from the start.

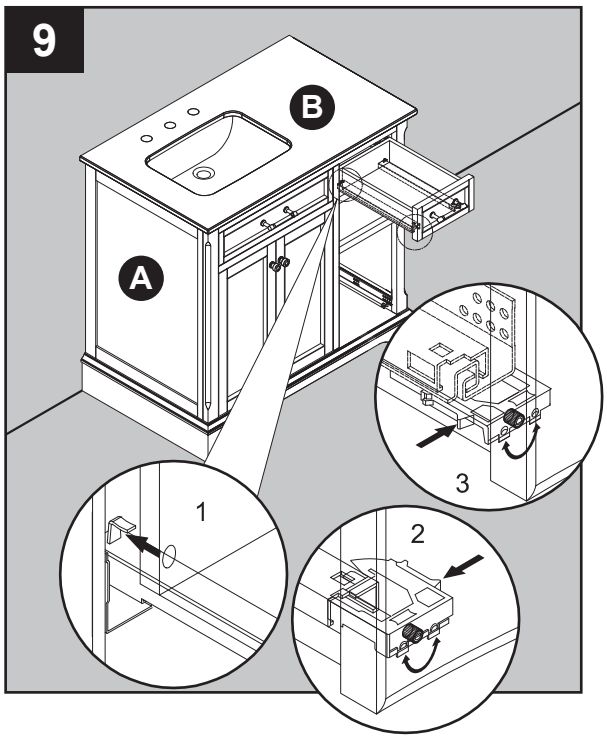

10. Insert shelf pins (GG) at desired height, ensuring they are level. Place shelf (G) on top of shelf pins (GG).

Hardware Used

GG	Shelf Pin	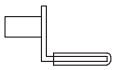	x 4

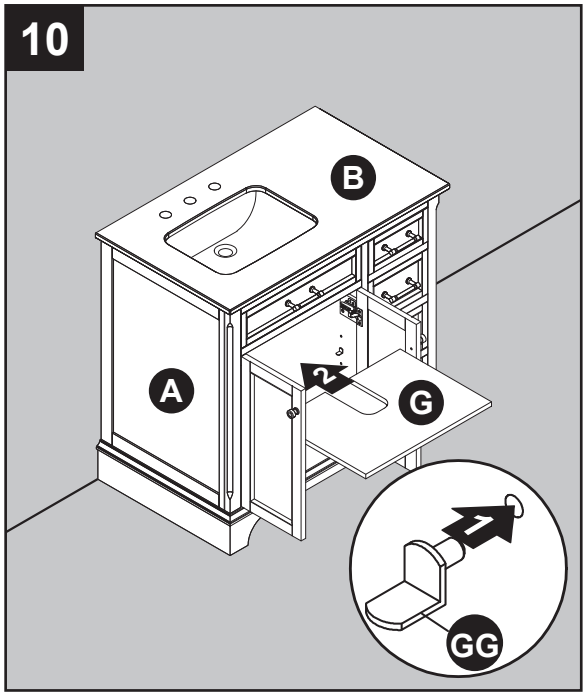

11. If you need to adjust the doors, do so in the following manner.
    To adjust door up or down, loosen screws (a) on both hinges, adjust door, and retighten screws.
    To adjust door left or right, turn screws (b) on both hinges, in and out.
    To adjust door in or out, loosen screws (c) on both hinges, adjust door, and retighten screws.

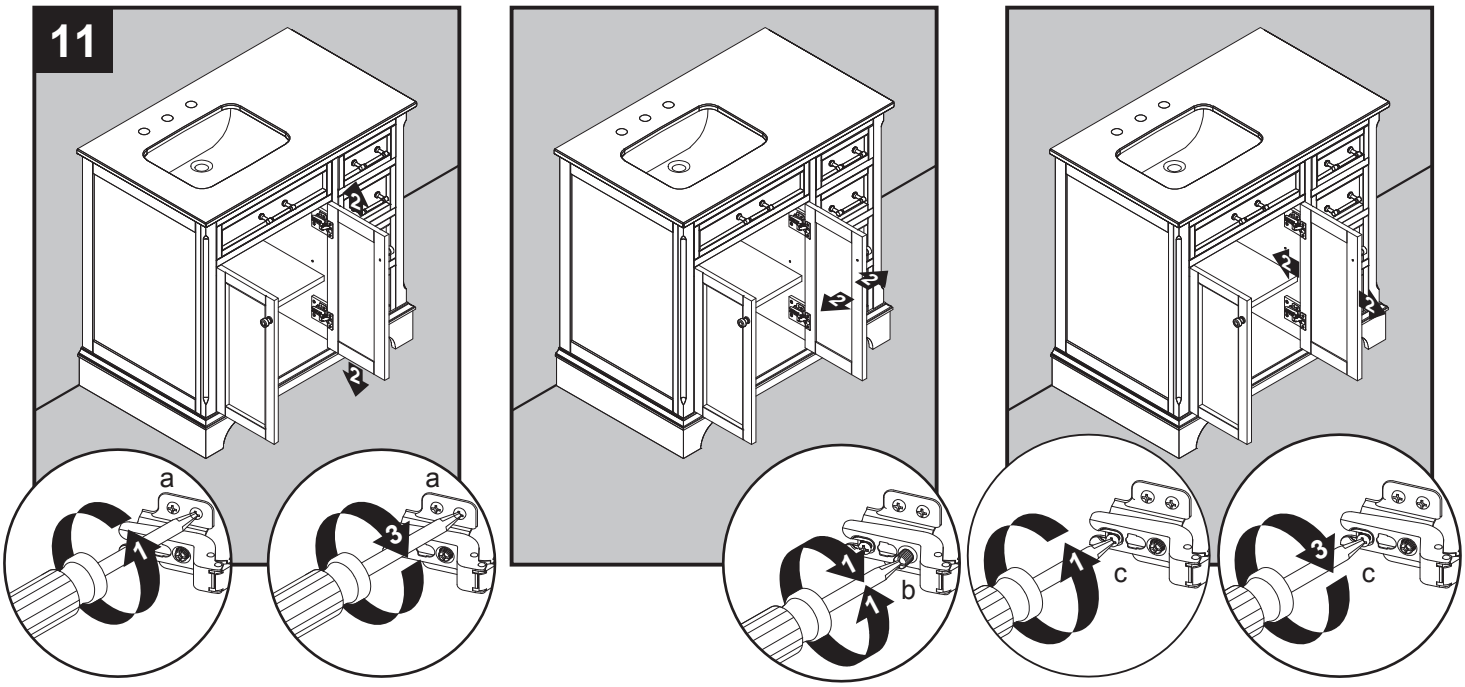

12. Apply silicone caulk (not included) to unpolished side and bottom of backsplash (C). Position backsplash (C) on top (B) and against wall. Clean any excess caulk before allowing to dry.

    Assembly is now complete. Install desired faucet and drain assemblies (neither included) per the manufacturers' instructions to complete the installation.

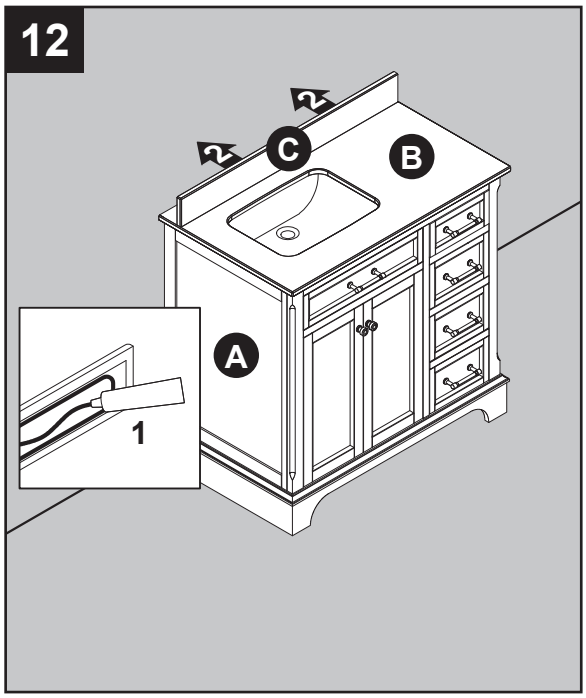

CARE AND MAINTENANCE

- Dust the vanity regularly with a soft, non-lint producing cloth or household dusting product.
- You can clean the vanity with a gentle, non-abrasive household cleaner.
- Make sure to dry the wood immediately with a soft cloth or towel.
- The stone top can be cleaned using standard marble cleaning agents available at your local supplier.
- Tips for using touch-up pen (FF): For scratches, stroke in direction of scratch. Rub off excess colorant promptly with a soft cloth.

IMPORTANT

- Shade variations and patterns are an inherent characteristic of stone (e.g. granite, marble, engineered stone). Stone tops will vary from product to product. Use caution placing items such as soap or any fragranced material on the stone surface. Use a soap dish, coaster or similar item to protect the surface if placing any soap or fragranced products on the stone.
- If soap or fragranced products come in contact with the stone top, rinse the surface with water and dry using a soft non-abrasive cloth.
- **WARNING:** Must use cleaning agents safe for stone. Check your cleaning agents use restrictions before using on any stone. Damage to the stone may result. Vanity Manufacturer not responsible for damage caused by improper cleaning agents or soaps used. Warranty will not cover damage caused by the use of improper soaps or cleaning agents.
- **DO NOT** use products to clean the stone top that contain acetone, lemon, vinegar or other acids as these may cause damage to the stone surface.
- Periodically reseal the stone top using an appropriate stone sealer available from your local home store. Follow the manufacturer’s directions on how to apply.

WARRANTY

The manufacturer warrants this item against defects in materials and workmanship for a period of one (1) year from the date of original retail purchase. This warranty applies only to the original purchaser. This warranty does not apply to any damage on the product by accident, misuse, or modified, improper installation or by affixing accessories not produced by the manufacturer. The manufacturer is not accountable whatsoever for product installation during the warranty period. There is no further expressed warranty. The manufacturer shall not be legally responsible for incidental, consequential or special damages arising at or in connection with product use or performance except as may otherwise be accorded by law. The manufacturer disclaims any and all implied warranties.

REPLACEMENT PARTS LIST FOR 2026VA-36-200 (Undermount Sink)

For replacement parts, call our customer service department at 1-866-439-9800, 8 a.m. - 8 p.m., EST, Monday - Sunday.

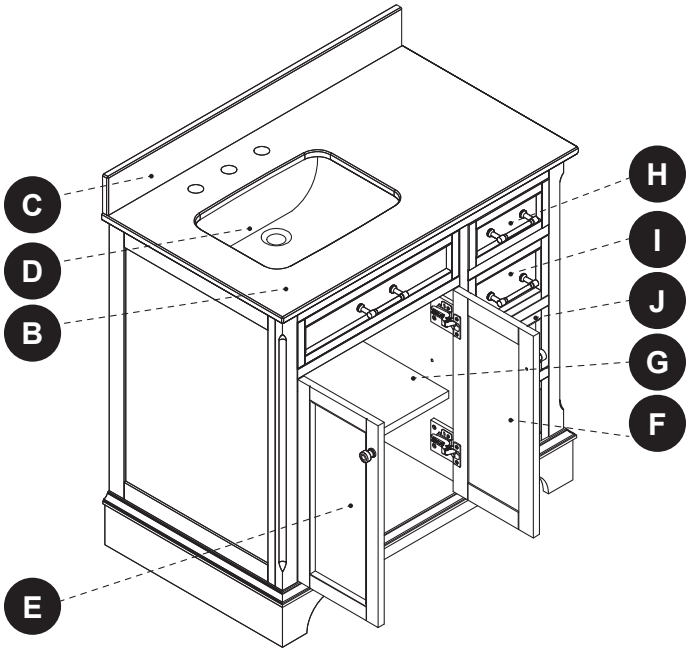

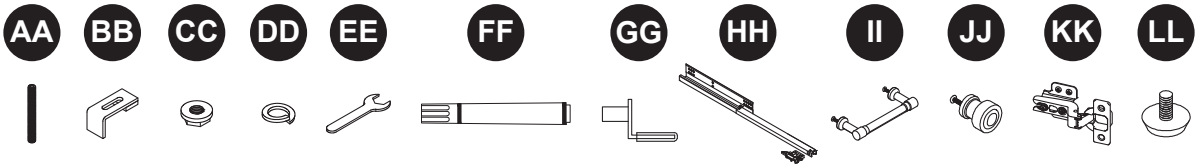

PART	DESCRIPTION	PART#
B	Complete Set 36" Engineered White Top	2500VT-36-901
	Complete Set 36" Terrazzo Top	2500VT-36-905
	Complete Set 36" Dark Gray Top	2500VT-36-906
C	36" Engineered White Backsplash	PUBS-25-901-36
	36" Terrazzo Backsplash	PUBS-25-905-36
	36" Dark Gray Backsplash	PUBS-25-906-36
D	Sink	PU17-18x14-SQUARE
E	Left Door	2026VB-36-200-001/002
F	Right Door	
G	Shelf	2026VB-36-200-003
H	Small Drawer Front	2026VB-36-200-004
I	Middle Drawer Front	2026VB-36-200-005
J	Large Drawer Front	2026VB-36-200-006
AA	Bolt	GTC-SINK CLIPS
BB	Sink Bracket	
CC	Nut	
DD	Lock Washer	
EE	Wrench	
FF	Touch-up Pen	OX-0180Z
GG	Shelf pin	B1044
HH	Glide Track Set	PUDTC-12X3-HANDLE
II	Pull (with screw)	CF-96-004-BN
JJ	Knob (with screw)	CF-D25-005-BN
KK	Hinge	C-90-107
LL	Leveler	T-1007

REPLACEMENT PARTS LIST FOR 2026VA-36-201 (Undermount Sink)

For replacement parts, call our customer service department at 1-866-439-9800, 8 a.m. - 8 p.m., EST, Monday - Sunday.

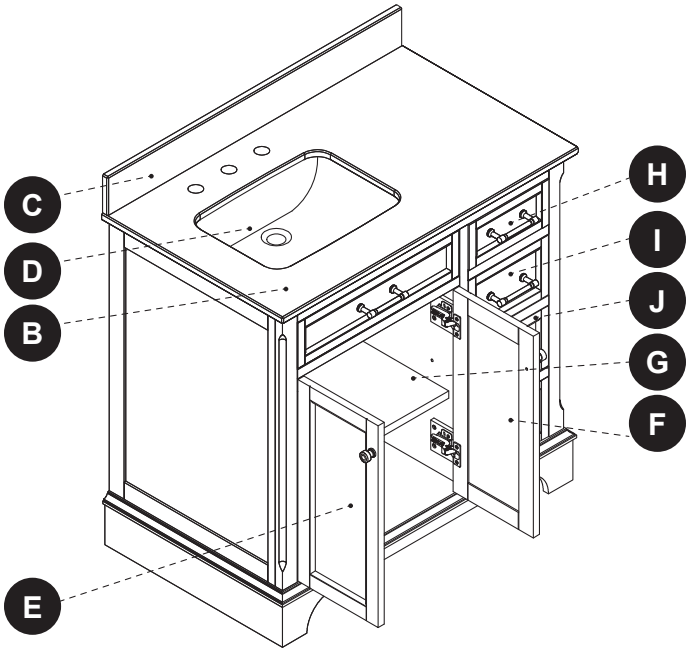

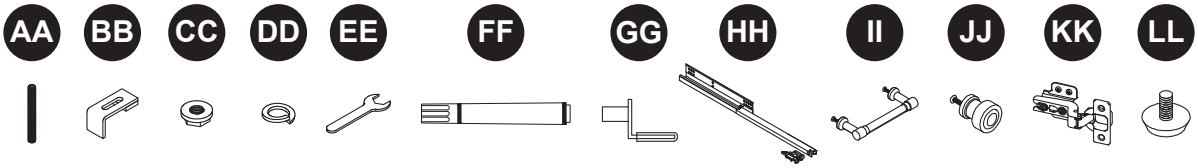

PART	DESCRIPTION	PART#
B	Complete Set 36" Carrara Marble Top	2500VT-36-900
	Complete Set 36" Engineered White Top	2500VT-36-901
	Complete Set 36" Terrazzo Top	2500VT-36-905
	Complete Set 36" Dark Gray Top	2500VT-36-906
	Complete Set 36" Engineered Carrara Top	2500VT-36-925
	Complete Set 36" Engineered Calacatta Top	2500VT-36-926
C	36" Carrara Marble Backsplash	PUBS-25-900-36
	36" Engineered White Backsplash	PUBS-25-901-36
	36" Terrazzo Backsplash	PUBS-25-905-36
	36" Dark Gray Backsplash	PUBS-25-906-36
	36" Engineered Carrara Backsplash	PUBS-25-925-36
	36" Engineered Calacatta Backsplash	PUBS-25-926-36
D	Sink	PU17-18x14-SQUARE
E	Left Door	2026VB-36-201-001/002
F	Right Door	
G	Shelf	2026VB-36-201-003
H	Small Drawer Front	2026VB-36-201-004
I	Middle Drawer Front	2026VB-36-201-005
J	Large Drawer Front	2026VB-36-201-006
AA	Bolt	GTC-SINK CLIPS
BB	Sink Bracket	
CC	Nut	
DD	Lock Washer	
EE	Wrench	
FF	Touch-up Pen	OF-0010
GG	Shelf pin	B1044
HH	Glide Track Set	PUDTC-12X3-HANDLE
II	Pull (with screw)	CF-96-004-BN
JJ	Knob (with screw)	CF-D25-005-BN
KK	Hinge	C-90-107
LL	Leveler	T-1007

REPLACEMENT PARTS LIST FOR 2026VA-36-242 (Undermount Sink)

For replacement parts, call our customer service department at 1-866-439-9800, 8 a.m. - 8 p.m., EST, Monday - Sunday.

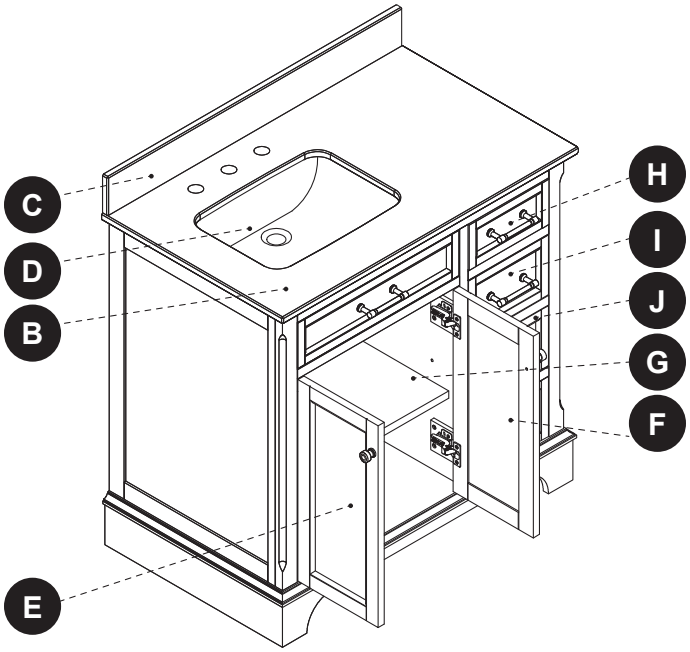

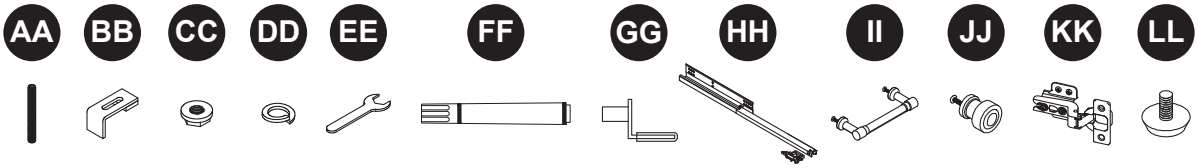

PART	DESCRIPTION	PART#
B	Complete Set 36" Carrara Marble Top	2500VT-36-900
	Complete Set 36" Engineered White Top	2500VT-36-901
	Complete Set 36" Terrazzo Top	2500VT-36-905
	Complete Set 36" Dark Gray Top	2500VT-36-906
	Complete Set 36" Engineered Carrara Top	2500VT-36-925
	Complete Set 36" Engineered Calacatta Top	2500VT-36-926
C	36" Carrara Marble Backsplash	PUBS-25-900-36
	36" Engineered White Backsplash	PUBS-25-901-36
	36" Terrazzo Backsplash	PUBS-25-905-36
	36" Dark Gray Backsplash	PUBS-25-906-36
	36" Engineered Carrara Backsplash	PUBS-25-925-36
	36" Engineered Calacatta Backsplash	PUBS-25-926-36
D	Sink	PU17-18x14-SQUARE
E	Left Door	2026VB-36-242-001/002
F	Right Door	
G	Shelf	2026VB-36-242-003
H	Small Drawer Front	2026VB-36-242-004
I	Middle Drawer Front	2026VB-36-242-005
J	Large Drawer Front	2026VB-36-242-006
AA	Bolt	GTC-SINK CLIPS
BB	Sink Bracket	
CC	Nut	
DD	Lock Washer	
EE	Wrench	
FF	Touch-up Pen	OF-0120R
GG	Shelf pin	B1044
HH	Glide Track Set	PUDTC-12X3-HANDLE
II	Pull (with screw)	CF-96-004-BN
JJ	Knob (with screw)	CF-D25-005-BN
KK	Hinge	C-90-107
LL	Leveler	T-1007